HEROSE

CRYOGENIC 2022

Valves for Cryogenic Applications

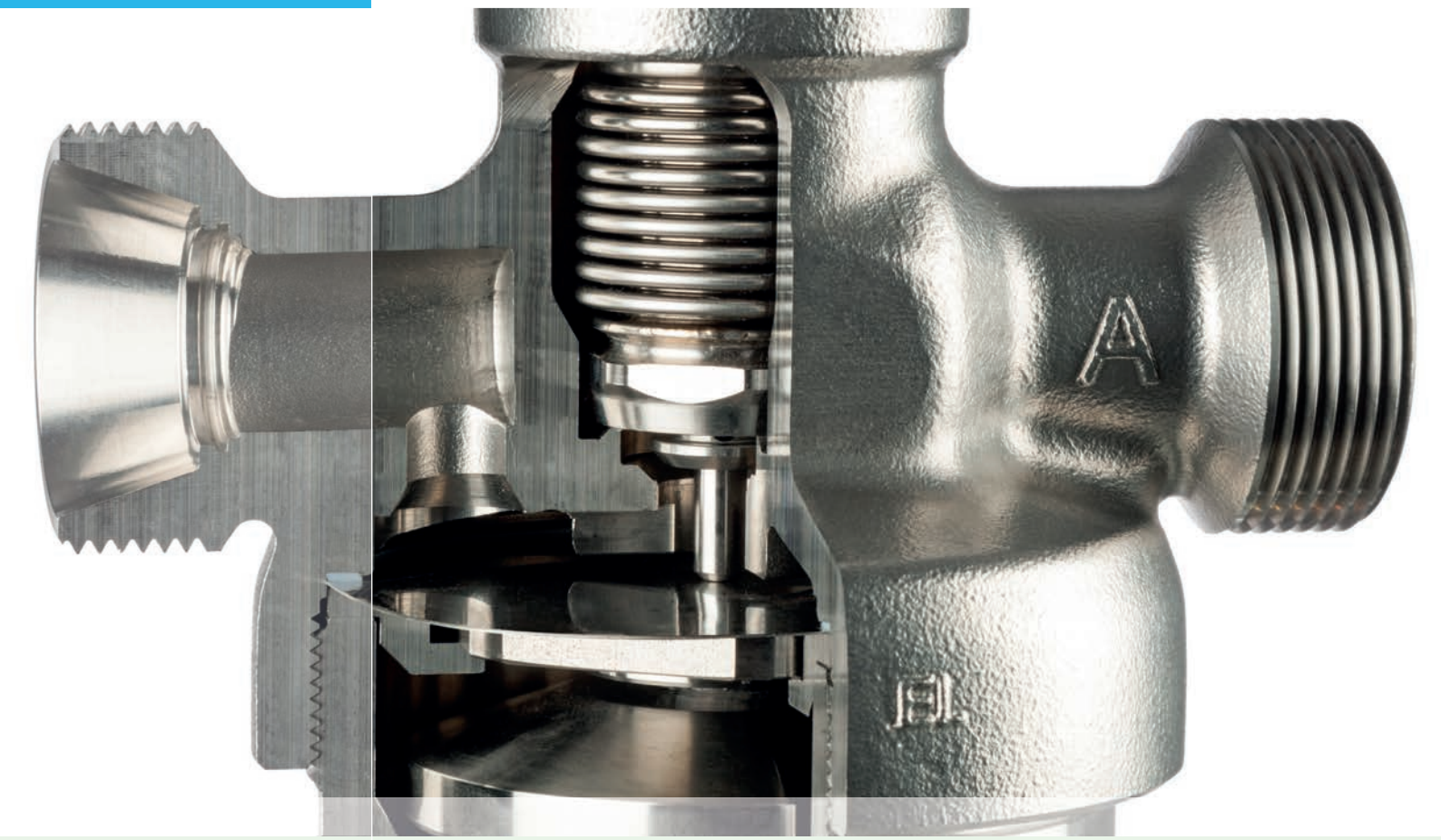

HEROSE worldwide

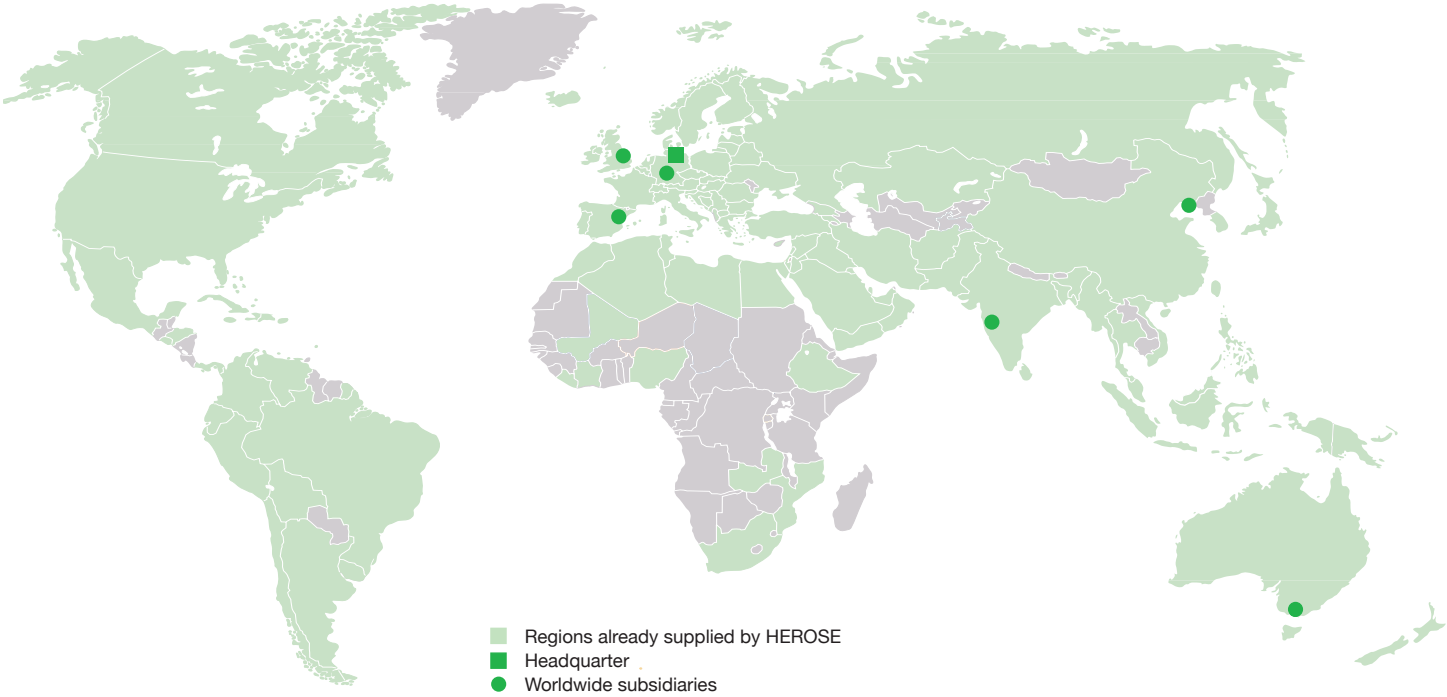

For the adresses of our partners and authorised service centres please visit www.herose.com

Headquarter

HEROSE GMBH
ARMATUREN UND METALLE

Elly-Heuss-Knapp-Strasse 12
23843 Bad Oldesloe
Germany
Phone: +49 4531 509-0
Fax: +49 4531 509-120
info@herose.com

Worldwide subsidiaries

Great Britain
HEROSE Ltd.

Finningley/Doncaster
Phone: +44 1302 773 114
Fax: +44 1302 773 333
keith.stewart@herose.co.uk
www.herose.co.uk

P.R. China
HEROSE Trading Co., Ltd.

Dalian
Phone: +86 411 6616 4388
Fax: +86 411 6616 4399
info@herose.cn
www.herose.cn

Australia
MACK VALVES Pty Ltd.

Bayswater, Victoria
Phone: +61 3 9737 5200
scott.gilson@mackvalves.com
www.mackvalves.com

Spain
HEROSE Ibérica S.L.

Barcelona
Phone: +34 930 028 328
ofertas@herose.es
www.herose.es

Germany
LORCH Sicherheitsventile GmbH & Co. KG

Filderstadt-Bernhausen
Phone: +49 711 22720-400
Fax: +49 711 22720-488
lorch@lorch.de
www.lorch.de

India
MACK VALVES India Pvt Ltd.

Pune
Phone: +91 20 6718 1614
Mobile: +91 98 1839 0222
sankalp.tiwari@herose.com
www.herose.com

All rights reserved, subject to errata and printing errors

Edition 2022-11

Contents

Company	4
Overview of Products	6
Storage and Transportation of Cryogenic Gases	27
Globe Valves	28
Angle Valves	83
Gate Valves	87
Butterfly Valves	91
Fill Cluster	93
Spare Parts for Valves and Fill Cluster	104
Actuated Valves and Actuators	148
Accessories for Actuated Valves	194
Spare Parts for Actuated Valves	216
Pressure Regulator	218
Check Valves	224
Spare Parts for Check Valves	242
Strainers	245
Spare Parts for Strainers	263
Safety Valves	264
Overflow Valves	352
Changeover Valves	358
Fire Safe and Offshore Applications	375
Fire Safe Valves	376
Offshore Valves	404
Fire Safe and Offshore Valves	446
Spare Parts for Fire Safe and Offshore Applications	467
General Information	480

Our aim is simple: Perfection.
The result: products on the very highest level.

Valves for cryogenic liquefied industrial gases

When liquefied at cryogenic temperatures, the volume of industrial gases reduces by a factor of up to 600 and therefore enables economic solutions for transport and storage. Our know-how in the development and manufacture of valves for cryogenic applications guarantees maximum process reliability in the handling of industrial gases. All components are automatically de-greased and therefore meet the stringent requirements for use with oxygen.

Transport

Industrial gases are liquefied at cryogenic temperatures and transported in special trailer from the air separation plant to the customer. Thanks to lightweight HEROSE valves, the payload can be increased.

Storage

Depending on the quantity, cryogenic air gases are stored in fixed storage tanks with capacities from 5,000 to 50,000 litres.
Compact HEROSE filling modules ensure safe and convenient handling during the filling process.

Processes

For the industrial production of high purity nitrogen, oxygen, argon and other air gases, the individual air components are separated using a thermal process in air separation plants.

The necessary repair and maintenance work in the Cold Box is greatly simplified by the use of HEROSE Top Entry valves.

Phone: +49 4531 509-0

HEROSE is one of the worldwide leading manufacturers of valves for industrial applications. For over 145 years we have developed, produced and sold valves for cryogenic technology and pressure vessel construction and set standards for the safe handling of technical gases, vapours and liquids. With a production volume of more than 400,000 valves per year, we are one of the most experienced suppliers in our sector. Our products are in successful use throughout the world.

Our partners in industry and business expect us to supply reliable valves, which meet the high demands of the future. They also expect a sound company and continuous product development from their business partners. These values form the foundation of the HEROSE company philosophy.

High Quality
Made in Germany

Valves for cryogenic liquefied natural gas (LNG)

Natural gas is liquefied at a temperature of -161 °C and enables this versatile fuel to be supplied without depending on pipelines. We use our many years of experience in the field of industrial air gases to provided valves which are optimised for small-scale LNG applications. If required, Fire Safe according to EN ISO 10497.

Transport

Special road trailer are used to transport LNG from the liquid gas storage facility to the users' satellite stations. Because of frequent filling, transportation and unloading, they are subjected to extreme stresses. HEROSE supplies the valves for liquefied natural gas, approved for LNG according to DIN EN 12567.

Storage

Cryogenic liquefied natural gas is stored in small-scale tank storage facilities with capacities from 10,000 to 100,000 m³. HEROSE valves have proved themselves in many tank storage filling and removal lines, including for safety-relevant valves, which are fire safe approved according to EN ISO 10497.

Fuelling

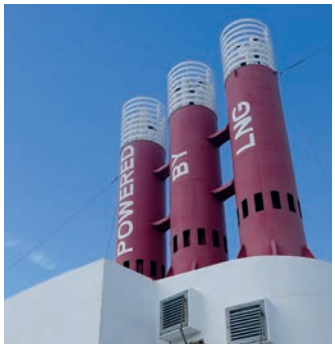

The use of LNG as fuel for ships has considerable environmental advantages – lower emissions of carbon dioxide, sulphur dioxide and nitrogen oxides. We offer a wide range of valves for marine installations with extreme demands with regard to fire safety. In addition, we have developed complete solutions for the associated infrastructure.

Processes

To supply customers with natural gas in various aggregate states according to their requirements, increasing numbers of decentralised liquefaction and re-gasification units are being constructed. HEROSE supplies a wide range of valves to cater for the various process requirements.

Globe Valves

Type	Nominal size	Connections	Working pressure	Temperature	Page
01301	DN10 - DN50	Socket for copper stubs Socket for stainl. steel stubs	PN50	-196°C - +120°C 77K - 393K	28
01301	DN10 - DN50	Copper stubs	PN50	-196°C - +120°C 77K - 393K	29
01301	DN10 - DN50	Stainless steel stubs	PN50	-196°C - +120°C 77K - 393K	30
01305	DN10 - DN50	Thread type G (BSPP) Thread type R (BSPT) Thread type NPT	PN50	-196°C - +120°C 77K - 393K	31
02401	DN10 - DN50	Male thread	PN50	-196°C - +120°C 77K - 393K	32
02401	DN10 - DN50	Union type braze fittings for copper pipe	PN50	-196°C - +120°C 77K - 393K	33
02401	DN10 - DN50	Union type weld fittings for stainless steel pipe	PN50	-196°C - +120°C 77K - 393K	34
01331	DN10 - DN150	Butt weld connection Socket weld connection	PN50 (DN150=PN40)	-196°C - +120°C 77K - 393K	35
01335	DN10 - DN50	Thread type G (BSPP) Thread type R (BSPT) Thread type NPT	PN50	-196°C - +120°C 77K - 393K	36
03331	DN15 - DN150	Flanged DIN EN PN40	PN40	-196°C - +120°C 77K - 393K	37
03331	DN15 - DN150	Flanged ANSI class 300	class 300	-196°C - +120°C 77K - 393K	38
03331	DN15 - DN150	Flanged ANSI class 150	class 150	-196°C - +120°C 77K - 393K	39
01351	DN10 - DN150	Butt weld connection, Socket weld connection	PN50 (DN150=PN40)	-196°C - +120°C 77K - 393K	40
01355	DN10 - DN50	Thread type G (BSPP) Thread type R (BSPT) Thread type NPT	PN50	-196°C - +120°C 77K - 393K	41
03351	DN15 - DN150	Flanged DIN EN PN40	PN40	-196°C - +120°C 77K - 393K	42
03351	DN15 - DN150	Flanged ANSI class 300	class 300	-196°C - +120°C 77K - 393K	43
03351	DN15 - DN150	Flanged ANSI class 150	class 150	-196°C - +120°C 77K - 393K	44
01311	DN10 - DN50	Socket for copper stubs Socket for stainl. steel stubs	PN50	-196°C - +120°C 77K - 393K	45
01311	DN10 - DN50	Copper stubs	PN50	-196°C - +120°C 77K - 393K	46
01311	DN10 - DN50	Stainless steel stubs	PN50	-196°C - +120°C 77K - 393K	47
01315	DN10 - DN50	Thread type G (BSPP) Thread type R (BSPT) Thread type NPT	PN50	-196°C - +120°C 77K - 393K	48
02411	DN10 - DN50	Male thread	PN50	-196°C - +120°C 77K - 393K	49
02411	DN10 - DN50	Union type braze fittings for copper pipe	PN50	-196°C - +120°C 77K - 393K	50
02411	DN10 - DN50	Union type weld fittings for stainless steel pipe	PN50	-196°C - +120°C 77K - 393K	51

Globe Valves

Type	Nominal size	Connections	Working pressure	Temperature	Page
01321	DN10 - DN150	Butt weld connection Socket weld connection	PN50 (DN150=PN40)	-196°C - +120°C 77K - 393K	52
01325	DN10 - DN50	Thread type G (BSPP) Thread type R (BSPT) Thread type NPT	PN50	-196°C - +120°C 77K - 393K	53
03321	DN15 - DN150	Flanged DIN EN PN16	PN16	-196°C - +120°C 77K - 393K	54
03321	DN15 - DN150	Flanged DIN EN PN40	PN40	-196°C - +120°C 77K - 393K	55
03321	DN15 - DN150	Flanged ANSI class 300	class 300	-196°C - +120°C 77K - 393K	56
03321	DN15 - DN150	Flanged ANSI class 150	class 150	-196°C - +120°C 77K - 393K	57
01341	DN10 - DN150	Butt weld connection, Socket weld connection	PN50 (DN150=PN40)	-196°C - +120°C 77K - 393K	58
01341	DN200	Butt weld connection, Socket weld connection	PN25	-196°C - +120°C 77K - 393K	59
01345	DN10 - DN50	Thread type G (BSPP) Thread type R (BSPT) Thread type NPT	PN50	-196°C - +120°C 77K - 393K	60
03341	DN15 - DN150	Flanged DIN EN PN40	PN40	-196°C - +120°C 77K - 393K	61
03341	DN15 - DN150	Flanged ANSI class 300	class 300	-196°C - +120°C 77K - 393K	62
03341	DN15 - DN150	Flanged ANSI class 150	class 150	-196°C - +120°C 77K - 393K	63
03341	DN200	Flanged ANSI class 150	class 150	-196°C - +120°C 77K - 393K	64
01252	DN10 - DN50	Butt weld connection, Socket weld connection	PN50	-196°C - +120°C 77K - 393K	65
03252	DN15 - DN50	Flanged DIN EN PN40	PN40	-196°C - +120°C 77K - 393K	66
03252	DN15 - DN50	Flanged ANSI class 300	class 300	-196°C - +120°C 77K - 393K	67
03252	DN15 - DN50	Flanged ANSI class 150	class 150	-196°C - +120°C 77K - 393K	68
01420	DN10 - DN100	Butt weld connection	PN50 (DN100=PN40)	-196°C - +120°C 77K - 393K	69
01950	DN6 - DN15	Butt weld or threaded connection	PN42	-196°C - +7°C 77K - 348K	70
1114	DN15 - DN50	Butt weld connection Socket weld connection	PN50	-196°C - +120°C 77K - 393K	71-73
1116	DN15 - DN50	Butt weld connection Socket weld connection	PN50	-196°C - +120°C 77K - 393K	74-76
11C01	DN10 - DN50	Butt weld connection	PN63	-269°C - +80°C 4K - 353K	77-82

Angle Valves

Type	Nominal size	Connections	Working pressure	Temperature	Page
01332	DN15 - DN50	Butt weld connection Socket weld connection	PN50	-196°C - +120°C 77K - 393K	83
01352	DN15 - DN50	Butt weld connection Socket weld connection	PN50	-196°C - +120°C 77K - 393K	84
01322	DN15 - DN50	Butt weld connection Socket weld connection	PN50	-196°C - +120°C 77K - 393K	85
01342	DN15 - DN50	Butt weld connection Socket weld connection	PN50	-196°C - +120°C 77K - 393K	86

Gate Valves

Type	Nominal size	Connections	Working pressure	Temperature	Page
09340	DN25 - DN100	Butt weld connection, Socket weld connection	PN50	-196°C - +120°C 77K - 393K	87
09345	DN25 - DN65	Thread type G (BSPP) Thread type R (BSPT) Thread type NPT	PN50	-196°C - +120°C 77K - 393K	88
09440	DN25 - DN65	Male thread for union connection	PN50	-196°C - +120°C 77K - 393K	89
09440	DN25 - DN65	Union type butt weld fittings	PN50	-196°C - +120°C 77K - 393K	90

Butterfly Valves

Type	Nominal size	Connections	Working pressure	Temperature	Page
17800	DN80 - DN400	Butt weld connection	PN10-PN25	-165°C - +100°C 108K - 373K	91
17800	DN100 - DN400	Butt weld connection	PN10-PN25	-165°C - +100°C 108K - 373K	92

Fill Cluster

Type	Nominal size	Connections	Working pressure	Temperature	Page
07003	DN25 - DN40	Inlet: female thread Outlet: 2x stainless steel pipes	PN50	-196°C - +120°C 77K - 393K	93
07004	DN25 - DN40	Inlet: Mueller flange Outlet: 2x stainless steel pipes	PN50	-196°C - +120°C 77K - 393K	94
07013	DN25 - DN40	Inlet: female thread Outlet: 2x stainless steel pipes	PN50	-196°C - +120°C 77K - 393K	95
07018	DN25 - DN40	Inlet: female thread Outlet: 2x stainless steel pipes	PN50	-196°C - +120°C 77K - 393K	96
07015	DN25 - DN40	Inlet: Air Liquide flange Outlet: socket weld conn.	PN50	-196°C - +120°C 77K - 393K	97
07015	DN25 - DN40	Inlet: Air Liquide flange Outlet: socket weld conn.	PN50	-196°C - +120°C 77 conn.K - 393K	98
07016	DN25 - DN40	Inlet: Mueller flange Outlet: 2x stainless steel pipes	PN50	-196°C - +120°C 77K - 393K	99
07012	DN25 - DN40	Inlet: Flange DIN EN PN40 Outlet: socket weld conn.	PN40	-196°C - +120°C 77K - 393K	100
07017	DN25 - DN40	Inlet: Air Liquide flange Outlet: socket weld conn.	PN50	-196°C - +120°C 77K - 393K	101

Fill Cluster

Type	Nominal size	Connections	Working pressure	Temperature	Page
07017	DN25 - DN40	Inlet: Air Liquide flange Outlet: socket weld conn.	PN50	-196°C - +120°C 77K - 393K	102
070XX	DN25 - DN40	Flow rates Fill Cluster			103

Spare Parts for Valves and Fill Cluster

Type	Specification	Nominal size	Suitable for Valve type	Page
28203	Disc complete, brass	DN10 - DN150	01301, 01305, 01311, 01315, 01321, 01322, 01325, 01331, 01332, 01335, 01420, 01423, 02401, 02411, 03321, 03331	104
28203	Disc complete, stainless steel	DN10 - DN200	01341, 01342, 01345, 01351, 01352, 01353, 01355, 03341, 03351	104
28203	Check disc complete, brass	DN10 - DN150	01301, 01305, 01311, 01315, 01321, 01322, 01325, 01331, 01332, 01335, 02401, 02411, 03321, 03331	105
28205	Check disc complete, stainless steel	DN10 - DN150	01341, 01342, 01345, 01351, 01352, 01355, 03341, 03351	105
29240	Disc complete, brass	DN25 - DN100	09340, 09343, 09345, 09440, 09443	106
29256	Wedge complete	DN25 - DN100	09340, 09343, 09345, 09440, 09443	107
28301	Topwork, bronze	DN10 - DN150	01301, 01305, 01331, 01335, 02401, 03331	108
28351	Topwork, stainless steel	DN10 - DN150	01351, 01355, 03351	109
28311	Topwork, bronze	DN10 - DN150	01311, 01315, 01321, 01325, 02411, 03321, 07003, 07004	110
28341	Topwork, stainless steel	DN10 - DN200	01341, 01345, 03341	111
01950	Topwork, brass	DN6 - DN15	01950	112
28302	Topwork angle type, bronze	DN15 - DN50	01332	113
28352	Topwork angle type, stainless steel	DN15 - DN50	01352	114
28312	Topwork angle type, bronze	DN15 - DN50	01322, 07003, 07004, 07015	115
28342	Topwork angle type, stainless steel	DN15 - DN50	01342, 07017	116
29340	Topwork gate valve, stainless steel	DN25 - DN100	09340	117
30000	Sealing spare part kit	DN10 - DN150	01301, 01305, 01311, 01315, 01321, 01322, 01325, 01331, 01332, 01335, 01353, 02401, 02411, 03321, 03331	118
30290	Sealing spare part kit	DN25 - DN100	09340, 09345, 09440	119
30293	Sealing spare part kit	DN25 - DN100	09343, 09443	120
30001, 30002, 30341, 30343	Sealing spare part kit	DN10 - DN200	01341, 01342, 01343, 01345, 01351, 01352, 01355, 01420, 01423, 03341, 03343, 03351	121
30353	Sealing spare part kit	DN20 - DN80	01353	122
31514	Disc sealing spare part kit	DN10 - DN150	01301, 01305, 01311, 01315, 01321, 01322, 01325, 01331, 01332, 01335, 01341, 01342, 01345, 01351, 01352, 01355, 02401, 02411, 03321, 03331, 03341, 03351	123
17800	Spare part kit	DN80 - DN400	17800	124
55317, 55318	Handwheel	DN10 - DN200	all manually operated valves	125
55379	Position indicator	DN10 - DN150	55379	126
55579	Valve safety catch capsule	DN15 - DN150	all manually operated valves	127
66394	Alcatraz valve locking	DN10 - DN200	all manually operated valves	128

Spare Parts for Valves and Fill Cluster

Type	Specification	Nominal size	Suitable for Valve type	Page
11C01	Sealing spare part kit - without bellow & bellow top position	DN10 - DN50	11C01	129
11C01	Sealing spare part kit - bellow bottom position	DN10 - DN50	11C01	130
11C01	Disc complete, stainless steel	DN10 - DN50	11C01	131

Ball Valves and Spare Parts

Type	Nominal size	Connections	Working pressure	Temperature	Page
15C01	DN15 - DN50	Socket weld connection, Butt weld connection, Thread type NPT, Thread type BSPT	PN50-100	-196°C - +65°C 77K - 338K	132-134
15C01	DN15 - DN50	-	PN50-100	-196°C - +65°C 77K - 338K	135
15C01	DN15 - DN50	-	PN50-100	-196°C - +65°C 77K - 338K	136
15C01	DN15 - DN50	-	PN50-100	-196°C - +65°C 77K - 338K	137
15C01	DN15 - DN50	-	PN50-100	-196°C - +65°C 77K - 338K	138
15C01/02	DN15 - DN50	Socket weld connection, Butt weld connection, Thread type NPT, Thread type BSPT	PN70-100	-60°C - +190°C 213K - 463K	139-141
15C01	DN15 - DN50	-	PN70-100	-196°C - +65°C 77K - 338K	142-144
15C02	DN15 - DN50	-	PN70-100	-60°C - +190°C 213K - 463K	145-147

Actuated Valves

Type	Nominal size	Connections	Working pressure	Temperature	Page
01313	DN10 - DN50	Socket for copper stubs Socket for stainl. steel stubs	PN50	-196°C - +120°C 77K - 393K	148
01313	DN10 - DN50	Stainless steel stubs	PN50	-196°C - +120°C 77K - 393K	149
01314	DN10 - DN50	Thread type G, Thread type NPT	PN50	-196°C - +120°C 77K - 393K	150
02413	DN10 - DN50	Male thread	PN50	-196°C - +120°C 77K - 393K	151
01343	DN10 - DN150	Butt weld connection, Socket weld connection	PN50 (DN150=PN40)	-196°C - +120°C 77K - 393K	152
01343	DN10 - DN150	Butt weld connection, Socket weld connection, Thread type G (BSPP) Thread type NPT	PN50 (DN150=PN40)	-196°C - +120°C 77K - 393K	153-155
01343	DN200	Butt weld connection, Socket weld connection	PN25	-196°C - +120°C 77K - 393K	156
01344	DN10 - DN50	Thread type G, Thread type NPT	PN50	-196°C - +120°C 77K - 393K	157
03323	DN15 - DN150	Flanged DIN EN PN16	PN16	-196°C - +120°C 77K - 393K	158
03323	DN15 - DN150	Flanged DIN EN PN40	PN40	-196°C - +120°C 77K - 393K	159
03323	DN15 - DN150	Flanged ANSI class 300	class 300	-196°C - +120°C 77K - 393K	160
03323	DN15 - DN150	Flanged ANSI class 150	class 150	-196°C - +120°C 77K - 393K	161
03343	DN15 - DN150	Flanged DIN EN PN16	PN16	-196°C - +120°C 77K - 393K	162
03343	DN15 - DN150	Flanged DIN EN PN40	PN40	-196°C - +120°C 77K - 393K	163
03343	DN15 - DN150	Flanged ANSI class 300	class 300	-196°C - +120°C 77K - 393K	164
03343	DN15 - DN150	Flanged ANSI class 150	class 150	-196°C - +120°C 77K - 393K	165
03343	DN200	Flanged ANSI class 150	class 150	-196°C - +120°C 77K - 393K	166
01343	DN15 - DN100	Butt weld connection, Socket weld connection	PN50	-196°C - +120°C 77K - 393K	167/168
01423	DN10 - DN100	Butt weld connection	PN50	-196°C - +120°C 77K - 393K	169
11C01	DN10 - DN25	Butt weld connection	up to PN63	-269°C - +80°C 4K - 353K	170-175
27100	DN10 - DN150	Electric actuator for globe valves		-20°C - +60°C 253K - 333K	176

Actuated Valves

Type	Nominal size	Connections	Working pressure	Temperature	Page
27511	DN10 - DN150	Pneumatic actuator for globe valves, spring to close		-20°C - +80°C 253K - 353K	177
27511	DN10 - DN150	Pneumatic actuator for control valves, spring to close		-20°C - +80°C 253K - 353K	178
27512	DN10 - DN150	Pneumatic actuator for globe valves, spring to open		-20°C - +80°C 253K - 353K	179
27512	DN10 - DN150	Pneumatic actuator for control valves, spring to open		-20°C - +80°C 253K - 353K	180
27514	DN10 - DN150	Pneumatic actuator for globe valves, spring to close		-40°C - +100°C 233K - 373K	181
27514	DN10 - DN150	Pneumatic actuator for globe valves, spring to close		-40°C - +100°C 233K - 373K	182
27514	DN10 - DN150	Pneumatic actuator for control valves, spring to close		-40°C - +100°C 233K - 373K	183
27514	DN10 - DN25	Pneumatic actuator for globe valves FullX, spring to close		-40°C - +100°C 233K - 373K	184/185
27515	DN10 - DN150	Pneumatic actuator for globe valves, spring to open		-40°C - +100°C 233K - 373K	186
27515	DN10 - DN150	Pneumatic actuator for globe valves, spring to open		-40°C - +100°C 233K - 373K	187
27515	DN10 - DN150	Pneumatic actuator for control valves, spring to open		-40°C - +100°C 233K - 373K	188
01353	DN20 - DN80	Butt weld connection, Socket weld connection	PN50	-196°C - +120°C 77K - 393K	189
09343	DN25 - DN100	Butt weld connection, Socket weld connection	PN50	-196°C - +120°C 77K - 393K	190
09443	DN25 - DN65	Male thread for union connection	PN50	-196°C - +120°C 77K - 393K	191
17800	DN80 - DN400	Butt weld connection	PN10-PN25	-165°C - +100°C 108K - 373K	192
17800	DN100 - DN400	Butt weld connection	PN10-PN25	-165°C - +100°C 108K - 373K	193

Accessories for Actuated Valves

Type	Specification	Temperature		Page
40060	Solenoid valve	-30°C - +90°C 243K - 363K		194
41060	Solenoid valve	-30°C - +90°C 243K - 363K		195
41060	Solenoid valve, suitable for oxygen	0°C - +90°C 273K - 363K		196
40061	Solenoid valve EEx	0°C - +80°C 273K - 353K		197
41061	Solenoid valve EEx	0°C - +80°C 273K - 353K		198
40070, 40071	Position and limit switches	-20°C - +80°C 253K - 353K		199
41070, 41071	Position and limit switches	-20°C - +80°C 253K - 353K		200
40080	Inductive proximity switches	-25°C - +70°C 248K - 343K		201
41080	Inductive proximity switches	-25°C - +70°C 248K - 343K		202
08002	Air control sets	-10°C - +60°C 263K - 333K		203
08003	Air control sets	-60°C - +90°C 213K - 363K		204
40090	Electropneumatic positioner	-30°C - +80°C 243K - 353K		205
41090	Electropneumatic positioner	-30°C - +80°C 243K - 353K		206
40091	Electropneumatic positioner EEx	-30°C - +50°C 243K - 323K		207
41091	Electropneumatic positioner EEx	-30°C - +50°C 243K - 323K		208
40090	Pneumatic positioner	-40°C - +80°C 233K - 353K		209
41090	Pneumatic positioner	-40°C - +80°C 233K - 353K		210
40281	Inductive proximity switches EEx-box	-40°C - +80°C 233K - 353K		211
41281	Inductive proximity switches EEx-box	-40°C - +80°C 233K - 353K		212
55177	Weather protection hood	-196°C - +120°C 77K - 393K		213
55287	Pipe Fittings	-196°C - +120°C 77K - 393K		214
74394	Bracket for accessories	-196°C - +120°C 77K - 393K		215

Spare Parts for Actuated Valves

Type	Specification	Nominal size	Suitable for Valve type	Page
29343	Topwork gate valve, stainless steel	DN25 - DN100	09343, 09443	216
30003	Spare part kit	DN20 - DN100	01353, 01653, 01753, 01853, 09343, 09443	217

Pressure Regulator

Type	Nominal size	Connections	Working pressure	Temperature	Page
4182	DN20	Male thread Thread type G (BSPP) Thread type NPT	PN50	-196°C - +65°C 77K - 338K	218,221
4185	DN20	Male thread Thread type G (BSPP) Thread type NPT	PN50	-196°C - +65°C 77K - 338K	219
4186	DN20	Male thread Thread type G (BSPP) Thread type NPT	PN50	-196°C - +65°C 77K - 338K	220,222
T118	DN20	Male thread	PN50	-196°C - +60°C 77K - 333K	223

Check Valves

Type	Nominal size	Connections	Opening pressure	Working pressure	Temperature	Page
05412	DN10 - DN50	Socket for copper stubs Socket for stainl. steel stubs	ca. 0,1 bar	PN50	-196°C - +120°C 77K - 393K	224
05412	DN10 - DN50	Copper stubs	ca. 0,1 bar	PN50	-196°C - +120°C 77K - 393K	225
05412	DN10 - DN50	Stainless steel stubs	ca. 0,1 bar	PN50	-196°C - +120°C 77K - 393K	226
05413	DN10 - DN50	Thread type G (BSPP) Thread type R (BSPT) Thread type NPT	ca. 0,1 bar	PN50	-196°C - +120°C 77K - 393K	227
05411	DN10 - DN50	Male thread	ca. 0,1 bar	PN50	-196°C - +120°C 77K - 393K	228
05411	DN10 - DN50	Union type braze fittings for copper pipe	ca. 0,1 bar	PN50	-196°C - +120°C 77K - 393K	229
05411	DN10 - DN50	Union type weld fittings for stainless steel pipe	ca. 0,1 bar	PN50	-196°C - +120°C 77K - 393K	230
05416	DN10 - DN100	Butt weld connection, Socket weld connection	ca. 0,1 bar	PN50	-196°C - +120°C 77K - 393K	231
05415	DN10 - DN50	Thread type G (BSPP) Thread type R (BSPT) Thread type NPT	ca. 0,1 bar	PN50	-196°C - +120°C 77K - 393K	232
05418	DN15 - DN100	Flanged DIN EN PN40	ca. 0,1 bar	PN40	-196°C - +120°C 77K - 393K	233
05418	DN15 - DN100	Flanged ANSI class 300	ca. 0,1 bar	class 300	-196°C - +120°C 77K - 393K	234
05418	DN15 - DN100	Flanged ANSI class 150	ca. 0,1 bar	class 150	-196°C - +120°C 77K - 393K	235

Check Valves

Type	Nominal size	Connections	Opening pressure	Working pressure	Temperature	Page
05414	DN10 - DN100	Butt weld connection, Socket weld connection	ca. 0,1 bar	PN50	-196°C - +120°C 77K - 393K	236
05414	DN200	Socket weld connection	ca. 0,1 bar	PN25	-196°C - +120°C 77K - 393K	237
05417	DN10 - DN50	Thread type G (BSPP) Thread type R (BSPT) Thread type NPT	ca. 0,1 bar	PN50	-196°C - +120°C 77K - 393K	238
05419	DN15 - DN100	Flanged DIN EN PN40	ca. 0,1 bar	PN40	-196°C - +120°C 77K - 393K	239
05419	DN15 - DN100	Flanged ANSI class 300	ca. 0,1 bar	class 300	-196°C - +120°C 77K - 393K	240
05419	DN15 - DN100	Flanged ANSI class 150	ca. 0,1 bar	class 150	-196°C - +120°C 77K - 393K	241

Spare Parts for Check Valves

Type	Specification	Nominal size	Suitable for Valve type	Page
28205	Check disc complete, brass	DN10 - DN150	05411, 05412, 05413, 05415, 05416, 05418	242
28206	Check disc complete, stainless steel	DN10 - DN150	05414, 05417, 05419	242
30514	Sealing spare part kit	DN10 - DN150	05411, 05412, 05413, 05414, 05415, 05416, 05417, 05418, 05419	243
31514	Disc sealing spare part kit	DN10 - DN100	05411, 05412, 05413, 05414, 05415, 05416, 05417, 05418, 05419	244

Strainers

Type	Nominal size	Connections	Mesh size	Working pressure	Temperature	Page
08411	DN10 - DN50	Male thread	0,25 mm	PN50	-196°C - +120°C 77K - 393K	245
08411	DN10 - DN50	Union type braze fittings for copper pipe	0,25 mm	PN50	-196°C - +120°C 77K - 393K	246
08411	DN10 - DN50	Union type weld fittings for stainless steel pipe	0,25 mm	PN50	-196°C - +120°C 77K - 393K	247
08412	DN10 - DN50	Socket for copper stubs Socket for stainl. steel stubs	0,25 mm	PN50	-196°C - +120°C 77K - 393K	248
08412	DN10 - DN50	Copper stubs	0,25 mm	PN50	-196°C - +120°C 77K - 393K	249
08412	DN10 - DN50	Stainless steel stubs	0,25 mm	PN50	-196°C - +120°C 77K - 393K	250
08413	DN10 - DN50	Thread type G (BSPP) Thread type R (BSPT) Thread type NPT	0,25 mm	PN50	-196°C - +120°C 77K - 393K	251
08414	DN10 - DN100	Butt weld connection, Socket weld connection	0,25 mm	PN50	-196°C - +120°C 77K - 393K	252
08415	DN10 - DN50	Thread type G (BSPP) Thread type R (BSPT) Thread type NPT	0,25 mm	PN50	-196°C - +120°C 77K - 393K	253

Strainers

Type	Nominal size	Connections	Mesh size	Working pressure	Temperature	Page
08431	DN15 - DN100	Flanged DIN EN PN40	0,25 mm	PN40	-196°C - +120°C 77K - 393K	254
08431	DN15 - DN100	Flanged ANSI class 300	0,25 mm	class 300	-196°C - +120°C 77K - 393K	255
08431	DN15 - DN100	Flanged ANSI class 150	0,25 mm	class 150	-196°C - +120°C 77K - 393K	256
08417	DN10 - DN100	Butt weld connection, Socket weld connection	0,25 mm	PN50	-196°C - +120°C 77K - 393K	257
08417	DN200	Socket weld connection	0,25 mm	PN25	-196°C - +120°C 77K - 393K	258
08416	DN10 - DN50	Thread type G (BSPP) Thread type R (BSPT) Thread type NPT	0,25 mm	PN50	-196°C - +120°C 77K - 393K	259
08432	DN15 - DN100	Flanged DIN EN PN40	0,25 mm	PN40	-196°C - +120°C 77K - 393K	260
08432	DN15 - DN100	Flanged ANSI class 300	0,25 mm	class 300	-196°C - +120°C 77K - 393K	261
08432	DN15 - DN100	Flanged ANSI class 150	0,25 mm	class 150	-196°C - +120°C 77K - 393K	262

Spare Parts for Strainers

Type	Specification	Nominal size	Suitable for Valve type	Page
30800, 30801	Strainer screen, Filter	DN10 - DN200	08412, 08413, 08414, 08415, 08416, 08417, 08431, 08432, 08716, 08717	263

Abbreviations: in column Medium - type tested for
S = Steams, **G** = Gases, **L** = Liquids

Safety Valves

Type	Orifice d_0	Inlet	Medium	Temperature	Set pressure range	Approval TÜV-SV	Approval ASME	Page
06001 gastight	6.0	Male thread 1/4" up to 1/2"	S/G/L	-196°C - +65°C 77K - 338K	5,0 - 55,0 bar 72,5 - 797,7 PSI	1048		264/265
06002, 06006	6.0	Male thread 1/4" up to 1/2"	S/G	-196°C - +150°C 77K - 423K	1,0 - 55,0 bar 14,5 - 797,7 PSI	1048	✓	266/267
06002 gastight	6.0	Male thread 1/4" up to 1/2"	S/G	-196°C - +150°C 77K - 423K	1,0 - 55,0 bar 14,5 - 797,7 PSI	1048	✓	268/269
06011 gastight	6.0	Male thread 1/4" up to 1/2"	S/G/L	-196°C - +65°C 77K - 338K	5,0 - 55,0 bar 72,5 - 797,7 PSI	1048		270/271
06012, 06016	6.0	Male thread 1/4" up to 1/2"	S/G	-196°C - +150°C 77K - 423K	1,0 - 55,0 bar 14,5 - 797,7 PSI	1048	✓	272/273
06012 gastight	6.0	Male thread 1/4" up to 1/2"	S/G	-196°C - +150°C 77K - 423K	1,0 - 55,0 bar 14,5 - 797,7 PSI	1048	✓	274/275
06474	6.0	Male thread 1/4" up to 3/4"	S/G	-196°C - +150°C 77K - 423K	0,4 - 55,0 bar 5,8 - 797,7 PSI	836		276/277
06478	6.0	Male thread 1/4" up to 3/4"	S/G	-196°C - +150°C 77K - 423K	0,4 - 55,0 bar 5,8 - 797,7 PSI	836		278/279
06386	10.5 - 14.0	Male thread 1/2" up to 1"	S/G	-196°C - +185°C 77K - 458K	0,2 - 40,0 bar 2,9 - 580,1 PSI	780	✓	280/281
06416	10.5 - 14.0	Male thread 1/2" up to 1"	S/G	-196°C - +185°C 77K - 458K	0,2 - 40,0 bar 2,9 - 580,1 PSI	780	✓	282/283
06387	10.5	Female thread 1/2"	S/G	-196°C - +185°C 77K - 458K	0,2 - 25,0 bar 2,9 - 362,6 PSI	780		284/285
06417	10.5	Female thread 1/2"	S/G	-196°C - +185°C 77K - 458K	0,2 - 25,0 bar 2,9 - 362,6 PSI	780		286/287
06388	7.0 - 23.0	Male thread 1/2" up to 2"	S/G	-196°C - +185°C 77K - 458K	2,0 - 50,0 bar 29,0 - 725,1 PSI	780	✓	288-291
06389	7.0 - 10.5	Male thread 1/2" up to 3/4"	S/G	-196°C - +185°C 77K - 458K	1,8 - 40,0 bar 26,1 - 580,1 PSI	780	✓	292/293
06418	7.0 - 23.0	Male thread 1/2" up to 2"	S/G	-196°C - +185°C 77K - 458K	2,0 - 50,0 bar 29,0 - 725,1 PSI	780	✓	294/297
06381	10.5	Male thread 1/2" up to 3/4"	S/G	-196°C - +185°C 77K - 458K	0,2 - 25,0 bar 2,9 - 362,6 PSI	780	✓	298/299
06382	10.5	Male thread 1/2" up to 3/4"	S/G	-196°C - +185°C 77K - 458K	0,2 - 25,0 bar 2,9 - 362,6 PSI	780	✓	300/301
06383	7.0 - 23.0	Male thread 1/2" up to 2"	S/G	-196°C - +185°C 77K - 458K	2,0 - 50,0 bar 29,0 - 725,1 PSI	780	✓	302/303
06413	7.0 - 23.0	Male thread 1/2" up to 2"	S/G	-196°C - +185°C 77K - 458K	2,0 - 50,0 bar 29,0 - 725,1 PSI	780	✓	304/305
06420	7.0 - 23.0	Male thread 1/2" up to 1-1/4"	S/G	-196°C - +185°C 77K - 458K	0,4 - 50,0 bar 5,8 - 725,1 PSI	1111	✓	306/307
06425	7.0 - 23.0	Male thread 1/2" up to 1-1/4"	S/G	-196°C - +185°C 77K - 458K	0,4 - 50,0 bar 5,8 - 725,1 PSI	1111	✓	308/309
06421	7.0 - 23.0	Female thread 1/2" up to 1-1/4"	S/G	-196°C - +185°C 77K - 458K	0,4 - 50,0 bar 5,8 - 725,1 PSI	1111	✓	310/311
06426	7.0 - 23.0	Female thread 1/2" up to 1-1/4"	S/G	-196°C - +185°C 77K - 458K	0,4 - 50,0 bar 5,8 - 725,1 PSI	1111	✓	312/313

HEROSE

Safety Valves

Type	Orifice d_0	Inlet	Medium	Temperature	Set pressure range	Approval TÜV-SV	Approval ASME	Page
06440	7.0 - 23.0	Male thread 1/2" up to 1-1/4"	S/G	-196°C - +185°C 77K - 458K	0,4 - 50,0 bar 5,8 - 725,1 PSI	1111	✓	314/315
06445	7.0 - 23.0	Male thread 1/2" up to 1-1/4"	S/G	-196°C - +185°C 77K - 458K	0,4 - 50,0 bar 5,8 - 725,1 PSI	1111	✓	316/317
06441	7.0 - 23.0	Female thread 1/2" up to 1-1/4"	S/G	-196°C - +185°C 77K - 458K	0,4 - 50,0 bar 5,8 - 725,1 PSI	1111	✓	318/319
06446	7.0 - 23.0	Female thread 1/2" up to 1-1/4"	S/G	-196°C - +185°C 77K - 458K	0,4 - 50,0 bar 5,8 - 725,1 PSI	1111	✓	320/321
06801	12.5 - 23.0	Male thread 1/2" up to 1"	S/G/L d_0=12,5 S/G	-270°C - +225°C 3K - 498K	3,0 - 25,0 bar 43,5 - 362,6 PSI	1105		322/323
06806	12.5 - 23.0	Male thread 1/2" up to 1"	S/G/L d_0=12,5 S/G	-270°C - +225°C 3K - 498K	3,0 - 25,0 bar 43,5 - 362,6 PSI	1105		324/325
06800	12.5 - 23.0	Female thread 1/2" up to 1"	S/G/L d_0=12,5 S/G	-270°C - +225°C 3K - 498K	3,0 - 25,0 bar 43,5 - 362,6 PSI	1105		326/327
06805	12.5 - 23.0	Female thread 1/2" up to 1"	S/G/L d_0=12,5 S/G	-270°C - +225°C 3K - 498K	3,0 - 25,0 bar 43,5 - 362,6 PSI	1105		328/329
06810, 06815	6.0 - 10.0	Male thread 1/2" up to 3/4"	S/G/L	-270°C - +400°C 3K - 673K	0,5 - 550,0 bar 7,3 - 7977,0 PSI	1130		330-337
06820	6.0	Male thread 3/4"	S/G/L	-270°C - +400°C 3K - 673K	30,0 - 550,0 bar 435,1 - 7977,0 PSI	1130		338/339
06850, 06855	10.0 - 18.0	Male thread 1/2" up to 1-1/2"	S/G/L	-270°C - +400°C 3K - 673K	0,5 - 250,0 bar 7,3 - 3626,0 PSI	1130		340-348
55335		Female thread 3/8" up to 1"	-	-270°C - +225°C 3K - 498K	-	-		349
50288		Female thread 1/2" up to 1 1/2"	-	-	-	-		350

Overflow Valves

Type	Orifice d_0	Inlet	Medium	Temperature	Set pressure range	Approval TÜV-SV	Approval ASME	Page
06386	10.5	Male thread 1/2" up to 3/4"	S/G	-196°C - +185°C 77K - 458K	0,5 - 35,0 bar 7,3 - 507,6 PSI	-		352/353
06381	10.5	Male thread 1/2" up to 3/4"	S/G/L	-196°C - +185°C 77K - 458K	0,5 - 35,0 bar 7,3 - 507,6 PSI	-		354/355
06001	6.0	Male thread 1/2"	S/G/L	-196°C - +65°C 77K - 338K	11,0 - 36,0 bar 159,5-522,1 PSI	-		356/357

Changeover Valves

Type	Nominal size	Inlet	Outlet	Temperature	Working pressure	Page
06510	DN20	Female thread 1"	Female thread 1/2" up to 3/4"	-196°C - +120°C 77K - 393K	PN 50	358
06510	DN20	Union type braze/weld fittings	Female thread 1/2" up to 3/4"	-196°C - +120°C 77K - 393K	PN 50	359
06510	DN32	Female thread 1-1/2"	Female thread 1" up to 1-1/2"	-196°C - +120°C 77K - 393K	PN 50	360
06512	DN20	Female thread 1"	Female thread 1/2" up to 3/4"	-196°C - +120°C 77K - 393K	PN 50	361
06520	DN20	Female thread 1"	Female thread 1/2" up to 3/4"	-196°C - +120°C 77K - 393K	PN 50	362
06530	DN20	Female thread 1"	Female thread 1/2" up to 3/4"	-196°C - +120°C 77K - 393K	PN 50	363
7111	DN32	Female thread 1" up to 1-1/2"	Female thread 1/2" up to 1"	-196°C - +120°C 77K - 393K	PN 50	364/365
06405	DN15 DN25	Female thread 3/4" up to 1"	Female thread 1/2" up to 1"	-196°C - +185°C 77K - 458K	DN15: PN 40 DN25: PN 45	366
06401	DN15	Locking sleeve Female thread	Locking sleeve Female thread Flanged	-196°C - +185°C 77K - 458K	PN 125 (up to max. PN250)	367
06401	DN15	Flanged	Locking sleeve Female thread Flanged	-196°C - +185°C 77K - 458K	PN 160 (up to max. PN 250)	368
06401	DN25	Locking sleeve Female thread	Locking sleeve Female thread Flanged	-196°C - +185°C 77K - 458K	PN 125 (up to max. PN250)	369
06401	DN25	Flanged	Locking sleeve Female thread Flanged	-196°C - +185°C 77K - 458K	PN 160 (up to max. PN 250)	370
06401	DN15 DN25	Locking sleeve, Female thread, Flanged	Locking sleeve, Female thread, Flanged	-196°C - +185°C 77K - 458K	PN 63 (up to max. PN 100)	371
06900	1/2"	Male thread	-	-196°C - +120°C 77K - 393K	-	372
06901	1/2"	Male thread	-	-196°C - +120°C 77K - 393K	-	373

Fire Safe Valves

Type	Nominal size	Connections	Working pressure	Temperature	Page
01651	DN10 - DN100	Butt weld connection, Socket weld connection	PN50	-196°C - +120°C 77K - 393K	376
01655	DN10 - DN50	Thread type G (BSPP) Thread type R (BSPT) Thread type NPT	PN50	-196°C - +120°C 77K - 393K	377
03651	DN15 - DN150	Flanged DIN EN PN40	PN40	-196°C - +120°C 77K - 393K	378
03651	DN15 - DN150	Flanged ANSI class 300	class 300	-196°C - +120°C 77K - 393K	379
03651	DN15 - DN150	Flanged ANSI class 150	class 150	-196°C - +120°C 77K - 393K	380
01641	DN10 - DN150	Butt weld connection, Socket weld connection	PN50 (DN150=PN40)	-196°C - +120°C 77K - 393K	381
01641	DN200	Butt weld connection, Socket weld connection	PN25	-196°C - +120°C 77K - 393K	382
01645	DN10 - DN50	Thread type G (BSPP) Thread type R (BSPT) Thread type NPT	PN50	-196°C - +120°C 77K - 393K	383
03641	DN15 - DN150	Flanged DIN EN PN40	PN40	-196°C - +120°C 77K - 393K	384
03641	DN15 - DN150	Flanged ANSI class 300	class 300	-196°C - +120°C 77K - 393K	385
03641	DN15 - DN150	Flanged ANSI class 150	class 150	-196°C - +120°C 77K - 393K	386
03641	DN200	Flanged ANSI class 150	class 150	-196°C - +120°C 77K - 393K	387
01262	DN10 - DN50	Butt weld connection, Socket weld connection	PN50	-196°C - +120°C 77K - 393K	388
1116F	DN15 - DN50	Butt weld connection Socket weld connection	PN50	-196°C - +120°C 77K - 393K	389-391

Fire Safe Valves

Type	Nominal size	Connections	Working pressure	Temperature	Page
01643	DN10 - DN150	Butt weld connection, Socket weld connection	PN50 (DN150=PN40)	-196°C - +120°C 77K - 393K	392
01643	DN10 - DN150	Butt weld connection, Socket weld connection, Thread type G (BSPP) Thread type NPT	PN50 (DN150=PN40)	-196°C - +120°C 77K - 393K	393-395
01643	DN200	Butt weld connection, Socket weld connection	PN25	-196°C - +120°C 77K - 393K	396
03643	DN15 - DN100	Flanged DIN EN PN16	PN16	-196°C - +120°C 77K - 393K	397
03643	DN15 - DN100	Flanged DIN EN PN40	PN40	-196°C - +120°C 77K - 393K	398
03643	DN15 - DN100	Flanged ANSI class 300	class 300	-196°C - +120°C 77K - 393K	399
03643	DN15 - DN100	Flanged ANSI class 150	class 150	-196°C - +120°C 77K - 393K	400
03643	DN200	Flanged ANSI class 150	class 150	-196°C - +120°C 77K - 393K	401
01653	DN20 - DN80	Butt weld connection, Socket weld connection	PN50	-196°C - +120°C 77K - 393K	402
05614	DN10 - DN100	Butt weld connection, Socket weld connection	PN50	-196°C - +120°C 77K - 393K	403

Offshore Valves

Type	Nominal size	Connections	Working pressure	Temperature	Page
01751	DN10 - DN100	Butt weld connection, Socket weld connection	PN50	-255°C - +120°C 18K - 393K	404
01755	DN10 - DN50	Thread type G (BSPP) Thread type R (BSPT) Thread type NPT	PN50	-255°C - +120°C 18K - 393K	405
03751	DN15 - DN150	Flanged DIN EN PN16	PN16	-255°C - +120°C 18K - 393K	406
03751	DN15 - DN150	Flanged DIN EN PN40	PN40	-255°C - +120°C 18K - 393K	407
03751	DN15 - DN150	Flanged ANSI class 300	class 300	-255°C - +120°C 18K - 393K	408
03751	DN15 - DN150	Flanged ANSI class 150	class 150	-255°C - +120°C 18K - 393K	409
01741	DN10 - DN150	Butt weld connection, Socket weld connection	PN50 (DN150=PN40)	-255°C - +120°C 18K - 393K	410
01741	DN200	Butt weld connection, Socket weld connection	PN25	-196°C - +120°C 77K - 393K	411
01745	DN10 - DN50	Thread type G (BSPP) Thread type R (BSPT) Thread type NPT	PN50	-255°C - +120°C 18K - 393K	412
03741	DN15 - DN150	Flanged DIN EN PN16	PN16	-255°C - +120°C 18K - 393K	413
03741	DN15 - DN150	Flanged DIN EN PN40	PN40	-255°C - +120°C 18K - 393K	414
03741	DN15 - DN150	Flanged ANSI class 300	class 300	-255°C - +120°C 18K - 393K	415
03741	DN15 - DN150	Flanged ANSI class 150	class 150	-255°C - +120°C 18K - 393K	416
03741	DN200	Flanged ANSI class 150	class 150	-196°C - +120°C 77K - 393K	417
01272	DN10 - DN50	Butt weld connection, Socket weld connection	PN50	-255°C - +120°C 18K - 393K	418
03272	DN15 - DN50	Flanged DIN EN PN40	PN40	-255°C - +120°C 18K - 393K	419
03272	DN15 - DN50	Flanged ANSI class 300	class 300	-255°C - +120°C 18K - 393K	420
03272	DN15 - DN50	Flanged ANSI class 150	class 150	-255°C - +120°C 18K - 393K	421
01470	DN10 - DN100	Butt weld connection	PN50 (DN100=PN40)	-196°C - +120°C 77K - 393K	422
01743	DN10 - DN150	Butt weld connection, Socket weld connection	PN50 (DN150=PN40)	-255°C - +120°C 18K - 393K	423
01743	DN200	Butt weld connection, Socket weld connection	PN25	-196°C - +120°C 77K - 393K	424

Offshore Valves

Type	Nominal size	Connections	Working pressure	Temperature	Page
03743	DN15 - DN150	Flanged DIN EN PN16	PN16	-255°C - +120°C 18K - 393K	425
03743	DN15 - DN150	Flanged DIN EN PN40	PN40	-255°C - +120°C 18K - 393K	426
03743	DN15 - DN150	Flanged ANSI class 300	class 300	-255°C - +120°C 18K - 393K	427
03743	DN15 - DN150	Flanged ANSI class 150	class 150	-255°C - +120°C 18K - 393K	428
03743	DN200	Flanged ANSI class 150	class 150	-196°C - +120°C 77K - 393K	429
01473	DN10 - DN100	Butt weld connection	PN50	-255°C - +120°C 18K - 393K	430
01753	DN20 - DN80	Butt weld connection, Socket weld connection	PN50	-255°C - +120°C 18K - 393K	431
27521	DN10 - DN100	Pneumatic actuator for globe valves, spring to close	-	-40°C - +80°C 233K - 353K	432
27521	DN10 - DN100	Pneumatic actuator for control valves, spring to close	-	-40°C - +80°C 233K - 353K	433
27522	DN10 - DN100	Pneumatic actuator for globe valves, spring to open	-	-40°C - +80°C 233K - 353K	434
27522	DN10 - DN100	Pneumatic actuator for control valves, spring to open	-	-40°C - +80°C 233K - 353K	435
05714	DN10 - DN100	Butt weld connection, Socket weld connection	PN50	-255°C - +120°C 18K - 393K	436
05717	DN10 - DN50	Thread type G (BSPP) Thread type R (BSPT) Thread type NPT	PN50	-255°C - +120°C 18K - 393K	437
05719	DN15 - DN100	Flanged DIN EN PN40	PN40	-255°C - +120°C 18K - 393K	438
05719	DN15 - DN100	Flanged ANSI class 300	class 300	-255°C - +120°C 18K - 393K	439
05719	DN15 - DN100	Flanged ANSI class 150	class 150	-255°C - +120°C 18K - 393K	440
08717	DN10 - DN100	Butt weld connection, Socket weld connection	PN50	-255°C - +120°C 18K - 393K	441
08716	DN10 - DN50	Thread type G (BSPP) Thread type R (BSPT) Thread type NPT	PN50	-255°C - +120°C 18K - 393K	442
08732	DN15 - DN100	Flanged DIN EN PN40	PN40	-196°C - +120°C 77K - 393K	443
08732	DN15 - DN100	Flanged ANSI class 300	class 300	-196°C - +120°C 77K - 393K	444
08732	DN15 - DN100	Flanged ANSI class 150	class 150	-196°C - +120°C 77K - 393K	445

Fire Safe and Offshore Valves

Type	Nominal size	Connections	Working pressure	Temperature	Page
01851	DN10 - DN100	Butt weld connection, Socket weld connection	PN50	-255°C - +120°C 18K - 393K	446
01855	DN10 - DN50	Thread type G (BSPP) Thread type R (BSPT) Thread type NPT	PN50	-255°C - +120°C 18K - 393K	447
03851	DN15 - DN100	Flanged DIN EN PN40	PN40	-255°C - +120°C 18K - 393K	448
03851	DN15 - DN100	Flanged ANSI class 300	class 300	-255°C - +120°C 18K - 393K	449
03851	DN15 - DN100	Flanged ANSI class 150	class 150	-255°C - +120°C 18K - 393K	450
01841	DN10 - DN150	Butt weld connection, Socket weld connection	PN50 (DN150=PN40)	-255°C - +120°C 18K - 393K	451
01841	DN200	Butt weld connection, Socket weld connection	PN25	-196°C - +120°C 77K - 393K	452
01845	DN10 - DN50	Thread type G (BSPP) Thread type R (BSPT) Thread type NPT	PN50	-255°C - +120°C 18K - 393K	453
03841	DN15 - DN100	Flanged DIN EN PN40	PN40	-255°C - +120°C 18K - 393K	454
03841	DN15 - DN100	Flanged ANSI class 300	class 300	-255°C - +120°C 18K - 393K	455
03841	DN15 - DN100	Flanged ANSI class 150	class 150	-255°C - +120°C 18K - 393K	456
03841	DN200	Flanged ANSI class 150	class 150	-196°C - +120°C 77K - 393K	457
01282	DN10 - DN50	Butt weld connection, Socket weld connection	PN50	-255°C - +120°C 18K - 393K	458
01843	DN10 - DN150	Butt weld connection, Socket weld connection	PN50 (DN150=PN40)	-255°C - +120°C 18K - 393K	459
01843	DN200	Butt weld connection, Socket weld connection	PN25	-196°C - +120°C 77K - 393K	460
03843	DN15 - DN100	Flanged DIN EN PN16	PN16	-255°C - +120°C 18K - 393K	461
03843	DN15 - DN100	Flanged DIN EN PN40	PN40	-255°C - +120°C 18K - 393K	462
03843	DN15 - DN100	Flanged ANSI class 300	class 300	-255°C - +120°C 18K - 393K	463
03843	DN15 - DN100	Flanged ANSI class 150	class 150	-255°C - +120°C 18K - 393K	464
03843	DN200	Flanged ANSI class 150	class 150	-196°C - +120°C 77K - 393K	465
01853	DN20 - DN80	Butt weld connection, Socket weld connection	PN50	-255°C - +120°C 18K - 393K	466

Spare Parts for Fire Safe and Offshore Applications

Type	Specification	Nominal size	Suitable for Valve type	Page
28651	Topwork, stainless steel	DN10 - DN150	01651, 01655, 03651	467
28641	Topwork, stainless steel	DN10 - DN150	01641, 01645, 03641	468
28751	Topwork, stainless steel	DN10 - DN150	01751, 01755, 03751	469
28741	Topwork, stainless steel	DN10 - DN150	01741, 01745, 03741	470
28851	Topwork, stainless steel	DN10 - DN150	01851, 01855, 03851	471
28841	Topwork, stainless steel	DN10 - DN150	01841, 01845, 03841	472
28203	Disc complete, stainless steel	DN10 - DN100	01741, 01745, 01751, 01755	473
29203	Disc complete, stainless steel	DN10 - DN150	01641, 01645, 01651, 01655, 03641, 03651	473
29203	Disc complete, stainless steel	DN10 - DN150	01841, 01845, 01851, 01855, 03841, 03851	473
29205	Check disc complete, stainless steel	DN10 - DN150	01641, 01645, 01651, 01655, 03641, 03651	474
29205	Check disc complete, stainless steel	DN10 - DN150	01841, 01845, 01851, 01855, 03841, 03851	474
28205	Check disc complete, stainless steel	DN10 - DN150	01741, 01745, 01751, 01755, 03741, 03751	474
28206	Check disc complete, stainless steel	DN10 - DN150	05714, 05717, 05719	475
29206	Check disc complete, stainless steel	DN10 - DN150	05614	475
30641, 30643	Sealing spare part kit	DN10 - DN200	01641, 01643, 01645, 01651, 01655, 01841, 01843, 01845, 01851, 01855, 03641, 03643, 03651, 03841, 03843, 03851	476
30653	Sealing spare part kit	DN15 - DN80	01653, 01753, 01853, 03653, 03753, 03853	477
30741, 30743	Sealing spare part kit	DN10 - DN200	01741, 01743, 01745, 01751, 01755, 03741, 03743, 03751	478
30714	Sealing spare part kit	DN10 - DN150	05714, 05717, 05719	479

Storage and Transportation of Cryogenic Gases

Transport and storage: The gas mixing plant in Easington on the east coast of the UK ensures for proper gas composition with the help of nitrogen. Equipped with HEROSE valves for cryogenic service.

Globe Valves

Type 01301 - Globe Valve

Cryogenic-Globe and Globe/Check Valves, PN50

Bronze body and topwork
" live loaded " gland packing
" cleaned and degreased for oxygen service "

Part No. 01301.X.0001
Part No. 01301.X.5001 Globe/Check Valve
Socket end for copper pipes acc. to DIN EN 12449 or ASTM B88

Available options - on request only:
· Socket end for stainless steel pipes acc. to ISO 1127
· Valve with control disc (tapered design)

Applications:
Approved for air gases, vapours and cryogenic liquified gases incl. LNG.
Working temperature: -196°C / -321°F (77K) up to +120°C / +248°F (393K)
Recommended working temperature: -60°C / -76°F (213K) up to +120°C / +248°F (393K)

Materials		DIN EN	ASTM
1	Body	CC491K	B 62 UNS C83600
2	Valve seal	PTFE / Carbon filled (25%)	
3	Disc	CW614N	B 283 UNS C38500
4	Bonnet gasket	PTFE	
5	Headpiece	CC493K	B 505 UNS C93200
6	Bolts	1.4301/A2	A 194 B8
8	Stem	1.4301	A 276 Grade 304
9	Gland packing	Graphite / PTFE	
10	Gland nut	CW614N	B 283 UNS C38500
11	Handwheel	Aluminium alloy	
12	Spring	CW452K	B 159 UNS C51900

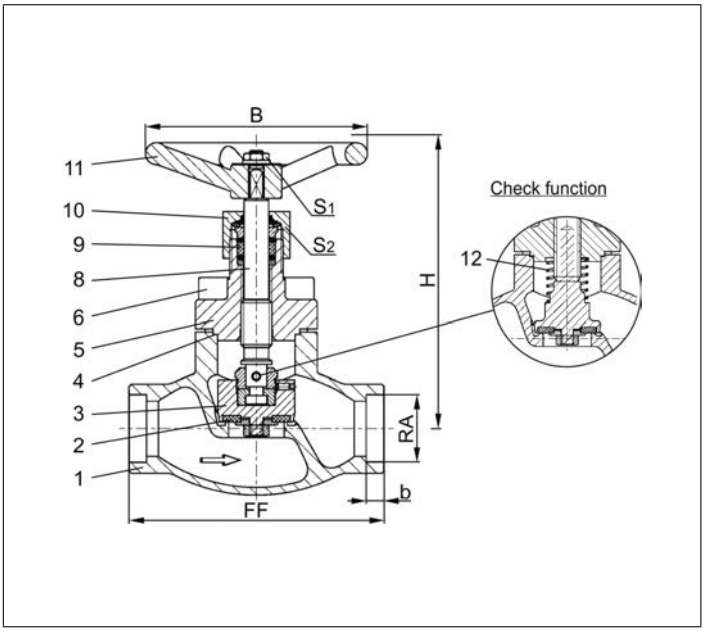

Type 01301 - Standard design	Technical data							
Nominal size	**DN**	**10**	**15**	**20**	**25**	**32**	**40**	**50**
Dimension code	.X.	X=DNRA, Example: valve DN10 for copper pipe RA$_{Ø}$12mm, X=1012						
Face-to-face dimension	FF	60	85	85	115	115	140	160
Height	H	140	140	140	140	170	175	200
Outside pipe-Ø	RA	dependent on order						
Socket depth	b	6	6	8	8	10	13	20
Handwheel-Ø	B	100	100	100	100	125	125	125
Wrench size across flats	S_1	7	7	7	7	10	10	10
Wrench size across flats	S_2	30	30	30	30	36	36	36
Weight	ca. kg	1.0	1.3	1.7	2.0	2.8	4.2	6.7
Kvs-Value	m^3/h	1.6	4.3	6.7	11.5	12.1	22.6	37.1
Cv-Value	gal/min	1.9	5.0	7.8	13.4	14.1	26.3	43.2

Dimensions in mm.

Globe Valves

Type 01301 - Globe Valve

Cryogenic-Globe and Globe/Check Valves, PN50 (DN10-25), PN40 (DN32), PN35 (DN40-50)

Bronze body and topwork
" live loaded " gland packing
" cleaned and degreased for oxygen service "

Part No. 01301.X.0008
Part No. 01301.X.5008 Globe/Check Valve
Complete with brazed copper stubs acc. to DIN EN 12449

Available options - on request only:
· Valve with control disc (tapered design)

Applications:
Approved for air gases, vapours and cryogenic liquefied gases incl. LNG.
Working temperature: - 196°C / -321°F (77K) up to +120°C / +248°F (393K)
Recommended working temperature: -60°C / -76°F (213K) up to +120°C / +248°F (393K)

Materials		DIN EN	ASTM
1	Body	CC491K	B 62 UNS C83600
2	Valve seal	PTFE / Carbon filled (25%)	
3	Disc	CW614N	B 283 UNS C38500
4	Bonnet gasket	PTFE	
5	Headpiece	CC493K	B 505 UNS C93200
6	Bolts	1.4301/A2	A 194 B8
8	Stem	1.4301	A 276 Grade 304
9	Gland packing	Graphite / PTFE	
10	Gland nut	CW614N	B 283 UNS C38500
11	Handwheel	Aluminium alloy	
12	Spring	CW452K	B 159 UNS C51900
13	Copper stubs	CW024A	B 152 UNS C12200

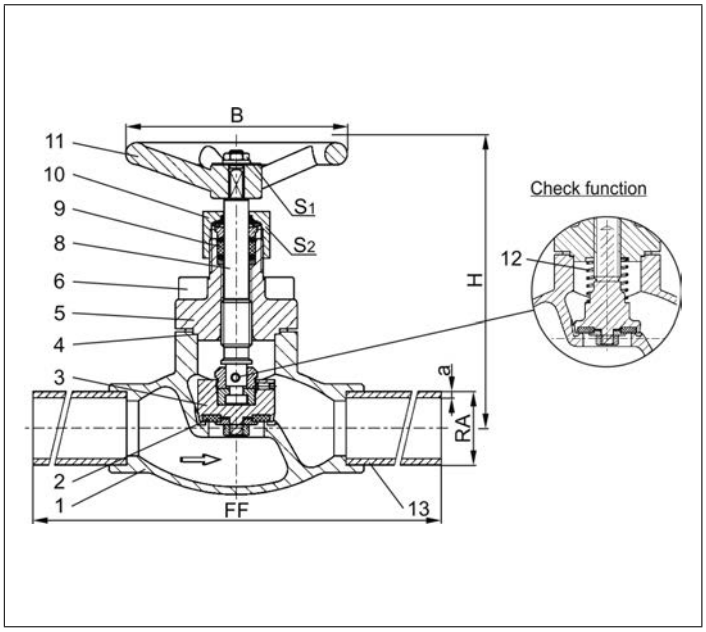

Type 01301 - Standard design	Technical data								
Nominal size	**DN**	**10**	**15**	**15**	**20**	**25**	**32**	**40**	**50**
Dimension code	.X.	1012	1515	1518	2022	2528	3235	4042	5054
Face-to-face dimension	FF	360	385	385	385	415	415	420	460
Height	H	140	140	140	140	140	170	175	200
Outside pipe-Ø	RA	12.0	15.0	18.0	22.0	28.0	35.0	42.0	54.0
Wall thickness pipe	a	1.0	1.5	1.5	1.5	1.5	1.5	1.5	2.0
Hanwheel-Ø	B	100	100	100	100	100	125	125	125
Wrench size across flats	S_1	7	7	7	7	7	10	10	10
Wrench size across flats	S_2	30	30	30	30	30	36	36	36
Weight	ca. kg	1.1	1.4	1.4	1.8	2.4	3.2	4.8	7.5
Kvs-Value	m^3/h	2.2	4.3	4.3	6.7	11.5	12.1	22.6	37.1
Cv-Value	gal/min	2.6	5.0	5.0	7.8	13.4	14.1	26.3	43.2

Dimensions in mm.

Edition 2022-11

Globe Valves

Type 01301 - Globe Valve

Cryogenic-Globe and Globe/Check Valves, PN50

Bronze body and topwork
" live loaded " gland packing
" cleaned and degreased for oxygen service "

Part No. 01301.X.0007
Part No. 01301.X.5007 Globe/Check Valve
Complete with brazed stainless steel stubs acc. to DIN EN 10216-5 or ASTM A312

Available options - on request only:
· Valve with control disc (tapered design)
· Further pipe wall thicknesses

Applications:
Approved for air gases, vapours and cryogenic liquefied gases incl. LNG.
Working temperature: -196°C / -321°F (77K) up to +120°C / +248°F (393K)
Recommended working temperature: -60°C / -76°F (213K) up to +120°C / +248°F (393K)

Materials		DIN EN	ASTM
1	Body	CC491K	B 62 UNS C83600
2	Valve seal	PTFE / Carbon filled (25%)	
3	Disc	CW614N	B 283 UNS C38500
4	Bonnet gasket	PTFE	
5	Headpiece	CC493K	B 505 UNS C93200
6	Bolts	1.4301/A2	A 194 B8
8	Stem	1.4301	A 276 Grade 304
9	Gland packing	Graphite / PTFE	
10	Gland nut	CW614N	B 283 UNS C38500
11	Handwheel	Aluminium alloy	
12	Spring	CW452K	B 159 UNS C51900
13	Stainless steel stubs	1.4306	A 312 TP304L

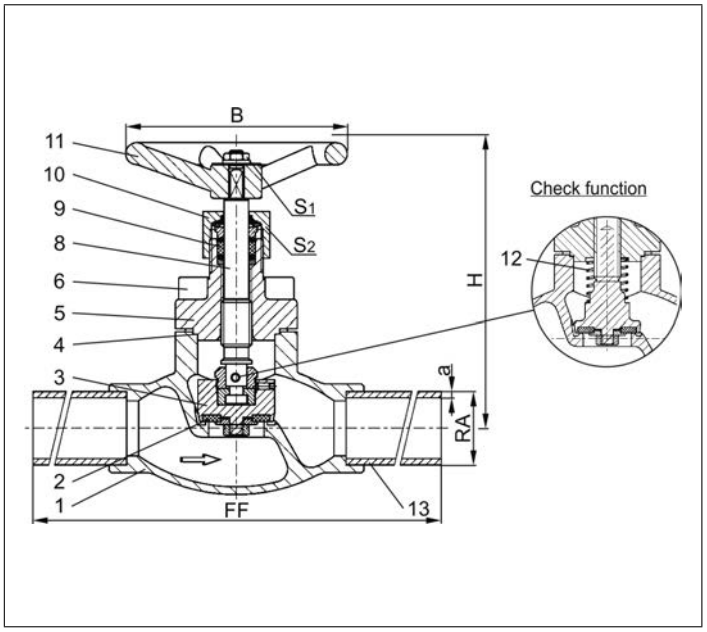

Type 01301 - Standard design	Technical data								
Nominal size	**DN**	**10**	**10**	**15**	**20**	**25**	**32**	**40**	**50**
Dimension code	.X.	1012	1017	1521	2027	2533	3242	4048	5060
Face-to-face dimension	FF	210	210	235	235	265	265	290	310
Height	H	140	140	140	140	140	170	175	200
Outside pipe-Ø ISO 1127	RA	12.0	17.2	21.3	26.9	33.7	42.4	48.3	60.3
Wall thickness pipe ISO 1127	a	1.0	2.3	2.6	2.9	3.2	3.2	3.6	3.6
Outside pipe-Ø ASTM A312	RA	-	17.15	21.34	26.67	33.4	42.16	48.26	60.33
Wall thickness pipe ASTM A312	a	dimensions acc. to S10 or S40							
Handwheel-Ø	B	100	100	100	100	100	125	125	125
Wrench size across flats	S_1	7	7	7	7	7	10	10	10
Wrench size across flats	S_2	30	30	30	30	30	36	36	36
Weight	ca. kg	1.05	1.15	1.5	1.8	2.4	3.2	4.8	7.5
Kvs-Value	m^3/h	2.2	2.2	4.3	6.7	11.5	12.1	22.6	37.1
Cv-Value	gal/min	2.6	2.6	5.0	7.8	13.4	14.1	26.3	43.2

Dimensions in mm.

Globe Valves

Type 01305 - Globe Valve

Cryogenic-Globe and Globe/Check Valves, PN50

Bronze body and topwork
" live loaded " gland packing
" cleaned and degreased for oxygen service "

Part No. 01305.X.0001
Part No. 01305.X.5001 Globe/Check Valve
Female thread connection (G) acc. to ISO 228/1

Part No. 01305.X.0006
Part No. 01305.X.5006 Globe/Check Valve
Female thread connection NPT acc. to ANSI B 1.20.1

Available options - on request only:
· Female thread connection (R) acc. to ISO 7-Rc
· Valve with control disc (tapered design)

Applications:
Approved for air gases, vapours and cryogenic liquefied gases incl. LNG.
Working temperature: -196°C / -321°F (77K) up to +120°C / +248°F (393K)
Recommended working temperature: -60°C / -76°F (213K) up to +120°C / +248°F (393K)

Materials		DIN EN	ASTM
1	Body	CC491K	B 62 UNS C83600
2	Valve seal	PTFE / Carbon filled (25%)	
3	Disc	CW614N	B 283 UNS C38500
4	Bonnet gasket	PTFE	
5	Headpiece	CC493K	B 505 UNS C93200
6	Bolts	1.4301/A2	A 194 B8
8	Stem	1.4301	A 276 Grade 304
9	Gland packing	Graphite / PTFE	
10	Gland nut	CW614N	B 283 UNS C38500
11	Handwheel	Aluminium alloy	
12	Spring	CW452K	B 159 UNS C51900

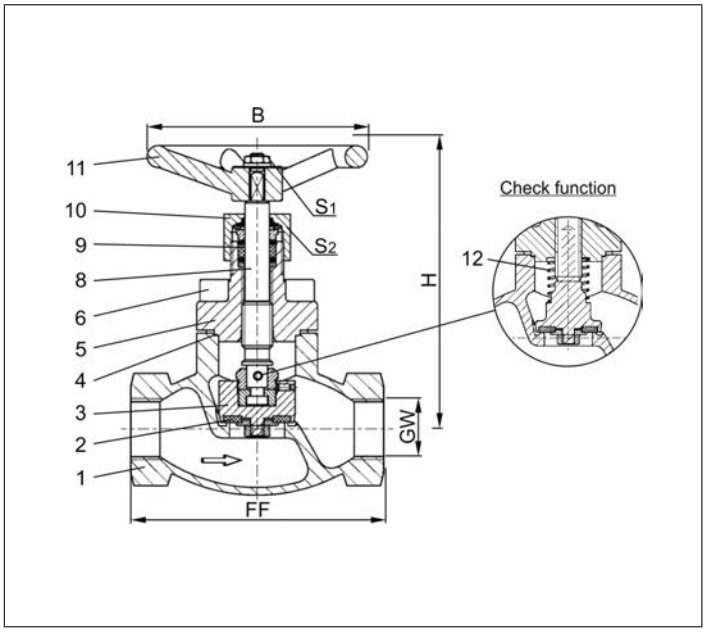

Type 01305 - Standard design	Technical data								
Nominal size	**DN**	**10**	**10**	**15**	**20**	**25**	**32**	**40**	**50**
Thread size	GW	1/4	3/8	1/2	3/4	1	1-1/4	1-1/2	2
Dimension code	.X.	0200	0300	0400	0600	1000	1200	1400	2000
Face-to-face dimension	FF	60	60	85	85	115	115	140	160
Height	H	140	140	140	140	140	170	175	200
Handwheel-Ø	B	100	100	100	100	100	125	125	125
Wrench size across flats	S_1	7	7	7	7	7	10	10	10
Wrench size across flats	S_2	30	30	30	30	30	36	36	36
Weight	ca. kg	1.0	1.0	1.3	1.7	2.0	2.8	4.2	6.7
Kvs-Value	m^3/h	1.6	2.2	4.3	6.7	11.5	20.6	22.6	37.1
Cv-Value	gal/min	1.9	2.6	5.0	7.8	13.4	23.9	26.3	43.2

Dimensions in mm.

Edition 2022-11

Globe Valves

Type 02401 - Globe Valve

Cryogenic-Globe and Globe/Check Valves, PN50

Bronze body and topwork,
" live loaded " gland packing
" cleaned and degreased for oxygen service "

Part No. 02401.X.0001
Part No. 02401.X.5001 Globe/Check Valve
Male thread for union connection

Available options - on request only:
· Valve with control disc (tapered design)

Applications:
Approved for air gases, vapours and cryogenic liquefied gases incl. LNG.
Working temperature: -196°C / -321°F (77K) up to +120°C / +248°F (393K)
Recommended working temperature: -60°C / -76°F (213K) up to +120°C / +248°F (393K)

Materials		DIN EN	ASTM
1	Body	CC491K	B 62 UNS C83600
2	Valve seal	PTFE / Carbon filled (25%)	
3	Disc	CW614N	B 283 UNS C38500
4	Bonnet gasket	PTFE	
5	Headpiece	CC493K	B 505 UNS C93200
6	Bolts	1.4301/A2	A 194 B8
8	Stem	1.4301	A 276 Grade 304
9	Gland packing	Graphite / PTFE	
10	Gland nut	CW614N	B 283 UNS C38500
11	Handwheel	Aluminium alloy	
12	Spring	CW452K	B 159 UNS C51900

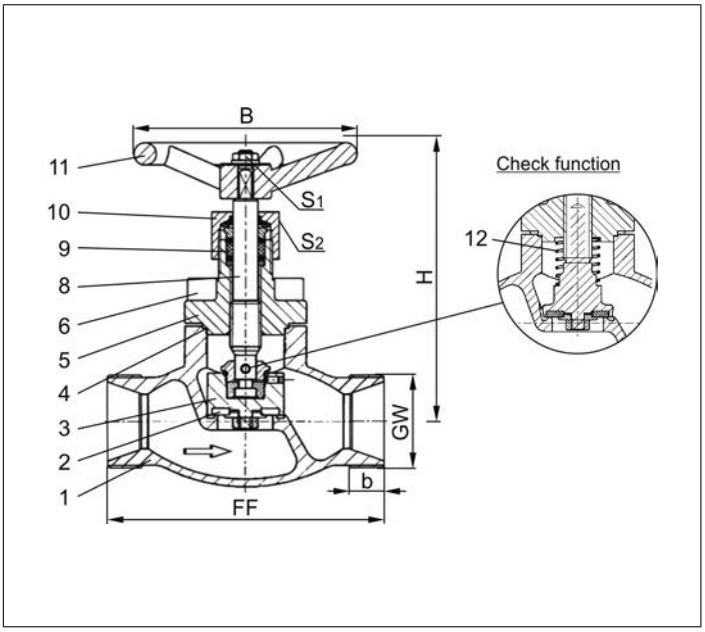

Type 02401 - Standard design	Technical data					
Nominal size	**DN**	**10**	**20**	**32**	**40**	**50**
Dimension code	.X.	0100	0200	0320	0400	0500
Face-to-face dimension	FF	60	85	115	140	160
Height	H	140	140	170	175	200
Union thread	GW	M26x1.5	M40x2.0	M55x2.0	M65x2.0	M78x2.0
Thread length	b	10	11	14	17	20
Handwheel-Ø	B	100	100	125	125	125
Wrench size across flats	S_1	7	7	10	10	10
Wrench size across flats	S_2	30	30	36	36	36
Weight	ca. kg	1.0	1.7	2.8	4.2	6.7
Kvs-Value	m^3/h	2.2	6.7	12.1	22.6	37.1
Cv-Value	gal/min	2.6	7.8	14.1	26.3	43.2

Dimensions in mm.

Globe Valves

Type 02401 - Globe Valve

Cryogenic-Globe and Globe/Check Valves, PN50

Bronze body and topwork,
" live loaded " gland packing
" cleaned and degreased for oxygen service "

Part No. 02401.X.0008
Part No. 02401.X.5008 Globe/Check Valve
Completed with union type braze fittings for copper pipes acc. to DIN EN 12449 or ASTM B88

Available options - on request only:
· Valve with control disc (tapered design)

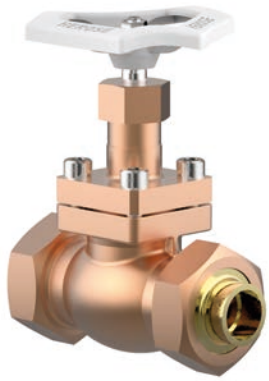

Applications:
Approved for air gases, vapours and cryogenic liquefied gases incl. LNG.
Working temperature: -196°C / -321°F (77K) up to +120°C / +248°F (393K)
Recommended working temperature: -60°C / -76°F (213K) up to +120°C / +248°F (393K)

Materials		DIN EN	ASTM
1	Body	CC491K	B 62 UNS C83600
2	Valve seal	PTFE / Carbon filled (25%)	
3	Disc	CW614N	B 283 UNS C38500
4	Bonnet gasket	PTFE	
5	Headpiece	CC493K	B 505 UNS C93200
6	Bolts	1.4301/A2	A 194 B8
8	Stem	1.4301	A 276 Grade 304
9	Gland packing	Graphite / PTFE	
10	Gland nut	CW614N	B 283 UNS C38500
11	Handwheel	Aluminium alloy	
12	Spring	CW452K	B 159 UNS C51900
13	Braze fitting	CC493K	B 505 UNS C93200
14	Union nut	CC493K	B 505 UNS C93200

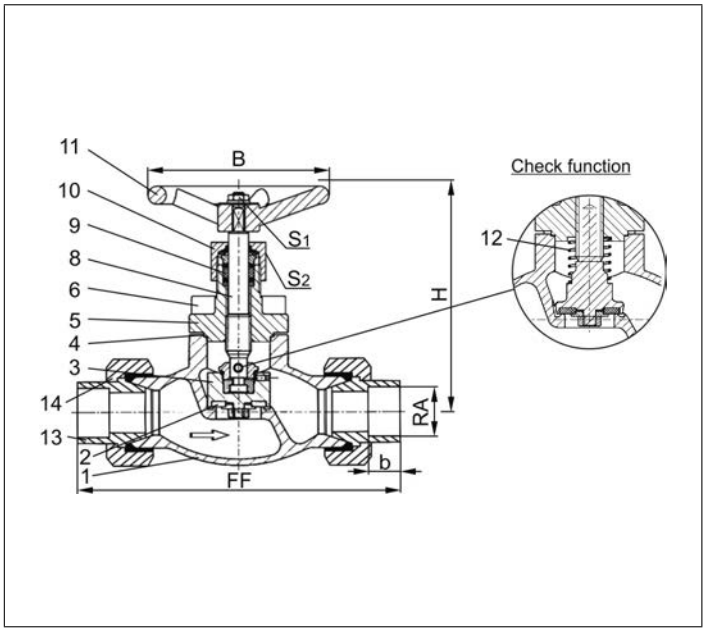

Type 02401 - Standard design	Technical data								
Nominal size	**DN**	**10**	**10**	**20**	**20**	**32**	**32**	**40**	**50**
Dimension code	.X.	1012	1015	1518	2022	2528	3235	4042	5054
Face-to-face dimension	FF	98	98	132	132	171	171	230	230
Height	H	140	140	140	140	170	170	175	200
Outside pipe-Ø	RA	12.0	15.0	18.0	22.0	28.0	35.0	42.0	54.0
Socket depth	b	11	11	14	14	17	17	17	17
Handwheel-Ø	B	100	100	100	100	125	125	125	125
Wrench size across flats	S_1	7	7	7	7	10	10	10	10
Wrench size across flats	S_2	30	30	30	30	36	36	36	36
Weight	ca. kg	1.2	1.2	2.4	2.4	4.0	4.0	6.3	9.5
Kvs-Value	m^3/h	1.6	2.2	6.0	6.7	11.5	12.1	22.6	37.1
Cv-Value	gal/min	1.9	2.6	7.1	7.8	13.4	14.1	26.3	43.2

Dimensions in mm.

Edition 2022-11

Globe Valves

Type 02401 - Globe Valve

Cryogenic-Globe and Globe/Check Valves, PN50

Bronze body and topwork,
" live loaded " gland packing
" cleaned and degreased for oxygen service "

Part No. 02401.X.0007
Part No. 02401.X.5007 Globe/Check Valve
Completed with union type butt weld fittings for stainless steel pipes acc. to ISO 1127 or ASTM A312

Available options - on request only:
· Valve with control disc (tapered design)
· Further pipe wall thicknesses

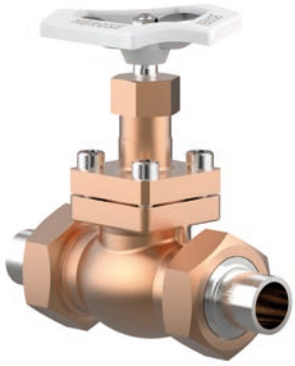

Applications:
Approved for air gases, vapours and cryogenic liquefied gases incl. LNG.
Working temperature: -196°C / -321°F (77K) up to +120°C / +248°F (393K)
Recommended working temperature: -60°C / -76°F (213K) up to +120°C / +248°F (393K)

Materials		DIN EN	ASTM
1	Body	CC491K	B 62 UNS C83600
2	Valve seal	PTFE / Carbon filled (25%)	
3	Disc	CW614N	B 283 UNS C38500
4	Bonnet gasket	PTFE	
5	Headpiece	CC493K	B 505 UNS C93200
6	Bolts	1.4301/A2	A 194 B8
8	Stem	1.4301	A 276 Grade 304
9	Gland packing	Graphite / PTFE	
10	Gland nut	CW614N	B 283 UNS C38500
11	Handwheel	Aluminium alloy	
12	Spring	CW452K	B 159 UNS C51900
13	Weld fitting	1.4301	A 276 Grade 304
14	Union nut	CC493K	B 505 UNS C93200

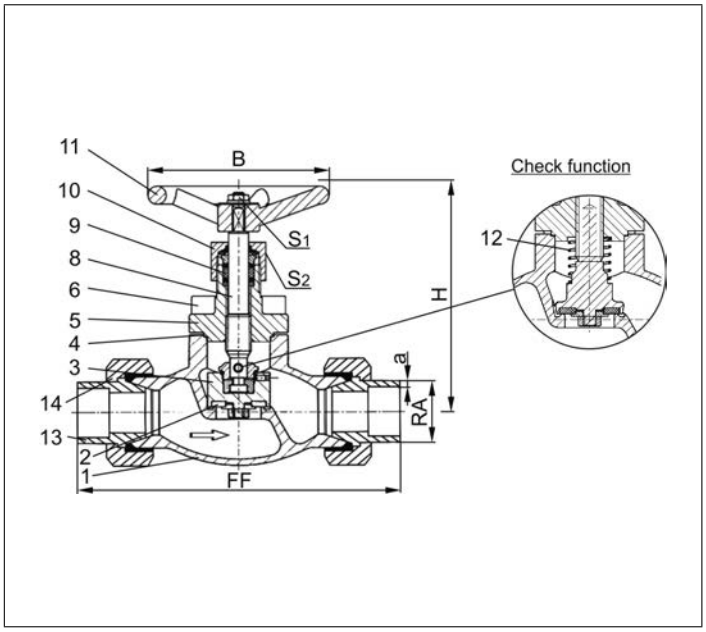

Type 02401 - Standard design	Technical data								
Nominal size	**DN**	**10**	**10**	**20**	**20**	**32**	**32**	**40**	**50**
Dimension code	.X.	1012	1017	1521	2027	2533	3242	4048	5060
Face-to-face dimension	FF	137	141	168	168	203	203	230	263
Height	H	140	140	140	140	170	170	175	200
Outside pipe-Ø ISO 1127	RA	12.0	17.2	21.3	26.9	33.7	42.4	48.3	60.3
Wall thickness pipe ISO 1127	a	1.0	2.3	2.6	2.0	3.2	2.0	3.6	3.6
Outside pipe-Ø ASTM A312	RA	-	17.15	21.34	26.67	33.40	42.16	48.26	60.33
Wall thickness pipe ASTM A312	a	dimensions acc. to S10 or S40							
Handwheel-Ø	B	100	100	100	100	125	125	125	125
Wrench size across flats	S_1	7	7	7	7	7	10	10	10
Wrench size across flats	S_2	30	30	30	30	36	36	36	36
Weight	ca. kg	1.2	1.2	2.4	2.4	4.0	4.0	6.3	9.5
Kvs-Value	m^3/h	1.6	2.2	6.7	6.7	12.1	12.1	22.6	37.1
Cv-Value	gal/min	1.9	2.6	7.8	7.8	14.1	14.1	26.3	43.2

Dimensions in mm.

Globe Valves

Type 01331 - Globe Valve

Cryogenic-Globe and Globe/Check Valves, PN50 (DN65=PN45, DN150=PN40)

Stainless steel body and bronze topwork
" live loaded " gland packing
" cleaned and degreased for oxygen service "

Part No. 01331.X.000*
Part No. 01331.X.500* Globe/Check Valve
*Butt weld connection for stainless steel pipes acc. to ISO 1127 or ASTM A312

Part No. 01331.X.0004
Part No. 01331.X.5004 Globe/Check Valve
Socket weld connection for stainless steel pipes acc. to ISO 1127 or ASTM A312

Available options - on request only:
· Welded stainless steel stubs acc. to ISO 1127 or ASTM A312 - length FF + 200mm
· Valve with control disc (tapered design)
· Further pipe wall thicknesses

Applications:
Approved for air gases, vapours and cryogenic liquefied gases incl. LNG.
Working temperature: -196°C / -321°F (77K) up to +120°C / +248°F (393K)
Recommended working temperature: -60°C / -76°F (213K) up to +120°C / +248°F (393K)

Materials		DIN EN	ASTM
1	Body	1.4308	A 351 CF8
2	Valve seal up to DN50	PTFE / Carbon filled (25%)	
2a	Valve seal from DN65	PTFE	
3	Disc	CW614N	B 283 UNS C38500
4	Bonnet gasket	PTFE	
5	Headpiece	CC493K	B 505 UNS C93200
6	Bolts	1.4301/A2	A 194 B8
8	Stem	1.4301	A 276 Grade 304
9	Gland packing	Graphite / PTFE	
10	Gland nut	CW614N	B 283 UNS C38500
11	Handwheel	Aluminium alloy	
12	Spring	CW452K	B 159 UNS C51900

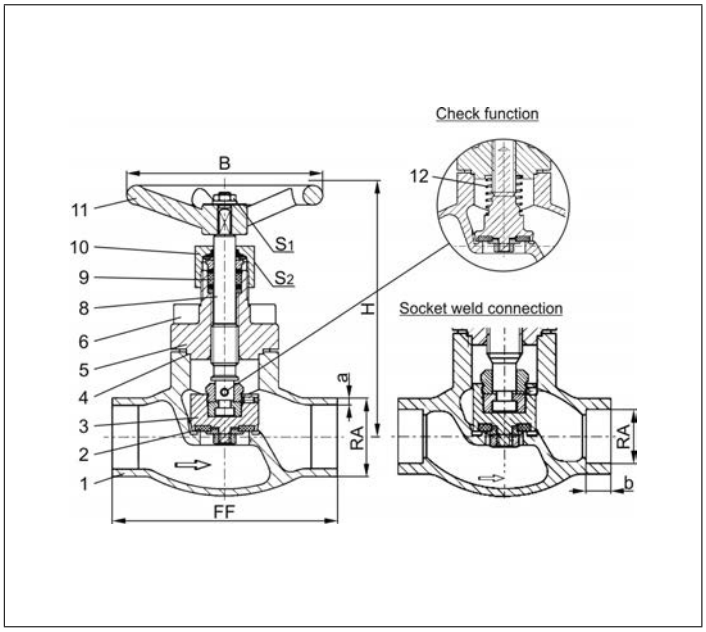

Type 01331 - Standard design	Technical data													
Nominal size	**DN**	**10**	**15**	**15**	**20**	**25**	**32**	**40**	**40**	**50**	**65**	**80**	**100**	**150**
Dimension code	.X.	1012	1517	1521	2026	2533	3238	4042	4048	5060	657x	8088	0114	0168
Face-to-face dimension	FF	70	85	85	100	115	115	130	130	155	205	245	280	400
Height	H	140	140	140	140	140	170	175	175	200	260	310	350	420
Outside pipe-Ø ISO 1127	RA	12.0	17.2	21.3	26.9	33.7	38.0	42.4	48.3	60.3	76.1	88.9	114.3	168.3
Wall thickness pipe ISO 1127	a	1.0	1.6	2.0	2.0	2.0	2.0	2.0	2.0	2.0	2.9	3.2	6.0	7.1
Outside pipe-Ø ASTM A312	RA	13.72	17.15	21.34	26.67	33.40	-	42.16	48.26	60.32	73.02	88.90	114.30	168.27
Wall thickness pipe ASTM A312	a	dimensions acc. to S10 or S40												
Socket depth	b	6	10	10	13	13	-	13	13	16	16	16	20	20
Handwheel-Ø	B	100	100	100	100	100	125	125	125	125	200	250	315	360
Wrench size across flats	S_1	7	7	7	7	7	10	10	10	10	10	10	12	15
Wrench size across flats	S_2	30	30	30	30	30	36	36	36	36	36	36	41	41
Weight	ca. kg	1.0	1.25	1.3	1.7	2.0	2.8	4.2	4.2	6.7	10.7	16.0	22.0	54.1
Kvs-Value	m^3/h	1.6	3.8	4.3	6.7	11.5	14.0	20.6	22.6	37.1	71.1	104.0	170.0	350.0
Cv-Value	gal/min	1.9	4.4	5.0	7.8	13.4	16.2	23.9	26.3	43.2	82.9	121.3	198.3	408.4

Dimensions in mm. Compliance of tightness requirements acc. to EN 1626 for DN150 up to 20 bar differential pressure. In the range of >20-40 bar, 350-700ml per second (1 bar, 20°C [68°F]) are reached.

Edition 2022-11

Globe Valves

Type 01335 - Globe Valve

Cryogenic-Globe and Globe/Check Valves, PN50

Stainless steel body and bronze topwork,
" live loaded " gland packing
" cleaned and degreased for oxygen service "

Part No. 01335.X.0001
Part No. 01335.X.5001 Globe/Check Valve
Female thread connection (G) acc. to ISO 228/1

Part No. 01335.X.0006
Part No. 01335.X.5006 Globe/Check Valve
Female thread connection NPT acc. to ANSI B 1.20.1

Available options - on request only:
· Female thread connection (R) acc. to ISO 7-Rc
· Valve with control disc (tapered design)

Applications:
Approved for air gases, vapours and cryogenic liquefied gases incl. LNG.
Working temperature: -196°C / -321°F (77K) up to +120°C / +248°F (393K)
Recommended working temperature: -60°C / -76°F (213K) up to +120°C / +248°F (393K)

Materials		DIN EN	ASTM
1	Body	1.4308	A 351 CF8
2	Valve seal	PTFE / Carbon filled (25%)	
3	Disc	CW614N	B 283 UNS C38500
4	Bonnet gasket	PTFE	
5	Headpiece	CC493K	B 505 UNS C93200
6	Bolts	1.4301/A2	A 194 B8
8	Stem	1.4301	A 276 Grade 304
9	Gland packing	Graphite / PTFE	
10	Gland nut	CW614N	B 283 UNS C38500
11	Handwheel	Aluminium alloy	
12	Spring	CW452K	B 159 UNS C51900

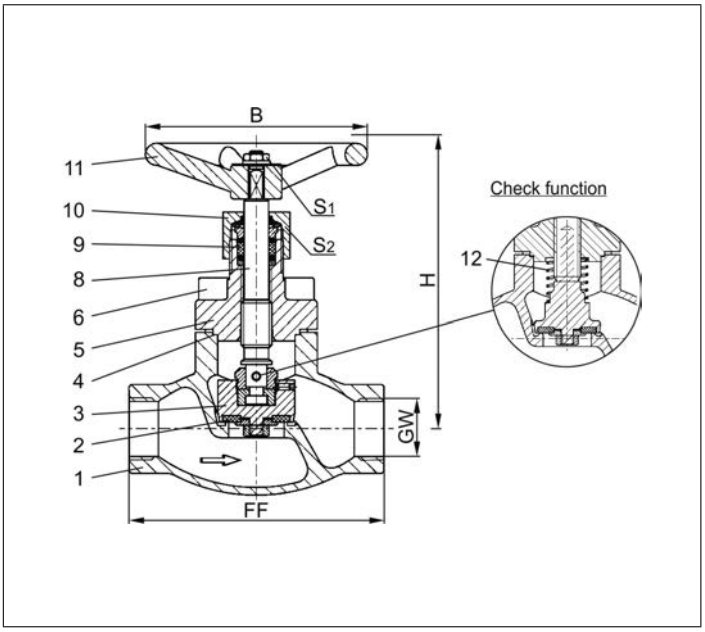

Type 01335 - Standard design	Technical data								
Nominal size	**DN**	**10**	**10**	**15**	**20**	**25**	**40**	**40**	**50**
Thread size	GW	1/4	3/8	1/2	3/4	1	1-1/4	1-1/2	2
Dimension code	.X.	0200	0300	0400	0600	1000	1200	1400	2000
Face-to-face dimension	FF	70	70	85	100	115	130	130	155
Height	H	140	140	140	140	140	175	175	200
Handwheel-Ø	B	100	100	100	100	100	125	125	125
Wrench size across flats	S_1	7	7	7	7	7	10	10	10
Wrench size across flats	S_2	30	30	30	30	30	36	36	36
Weight	ca. kg	1.0	1.0	1.3	1.7	2.0	4.2	4.2	6.7
Kvs-Value	m^3/h	1.6	2.2	4.3	6.7	11.5	20.6	22.6	37.1
Cv-Value	gal/min	1.9	2.6	5.0	7.8	13.4	23.9	26.3	43.2

Dimensions in mm.

Globe Valves

Type 03331 - Globe Valve, DIN EN Flanges

Cryogenic-Globe and Globe/Check Valves, PN40

Stainless steel body and bronze topwork,
" live loaded " gland packing
" cleaned and degreased for oxygen service "

Part No. 03331.X.0002
Part No. 03331.X.5002 Globe/Check Valve
Flanged connection acc. to DIN EN 1092-1 PN40

Available options - on request only:
· Valve with control disc (tapered design)

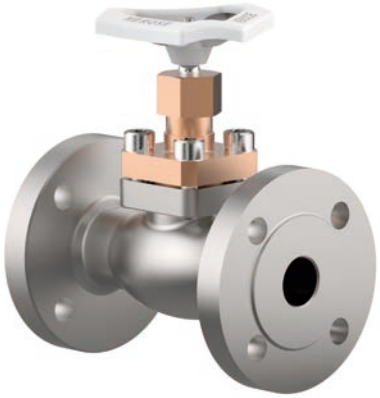

Applications:
Approved for air gases, vapours and cryogenic liquefied gases incl. LNG.
Working temperature: -196°C / -321°F (77K) up to +120°C / +248°F (393K)
Recommended working temperature: -60°C / -76°F (213K) up to +120°C / +248°F (393K)

Materials		DIN EN	ASTM
1	Body	1.4308	A 351 CF8
2	Valve seal up to DN50	PTFE / Carbon filled (25%)	
2a	Valve seal from DN65	PTFE	
3	Disc	CW614N	B 283 UNS C38500
4	Bonnet gasket	PTFE	
5	Headpiece	CC493K	B 505 UNS C93200
6	Bolts	1.4301/A2	A 194 B8
8	Stem	1.4301	A 276 Grade 304
9	Gland packing	Graphite / PTFE	
10	Gland nut	CW614N	B 283 UNS C38500
11	Handwheel	Aluminium alloy	
12	Spring	CW452K	B 159 UNS C51900

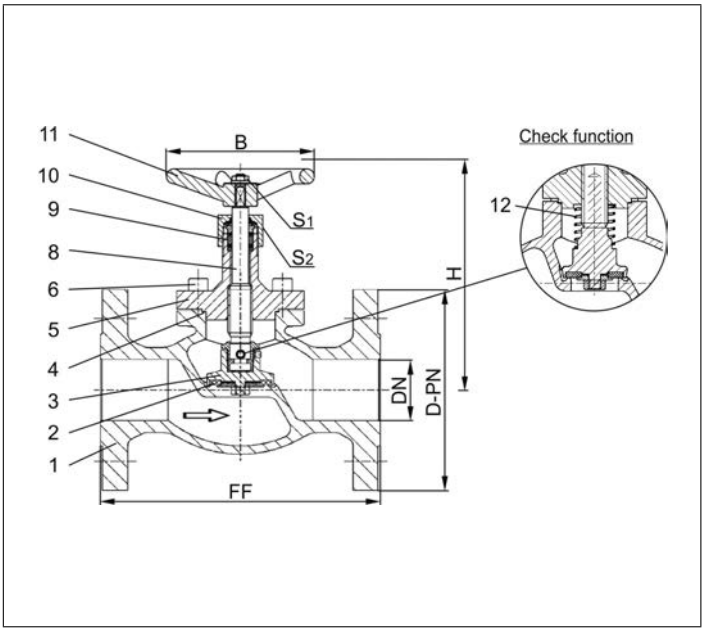

Type 03331 - Standard design	Technical data									
Nominal size	**DN**	**15**	**20**	**25**	**40**	**50**	**65**	**80**	**100**	**150**
Dimension code - Flange EN 1092-1 PN40	.X.	0150	0200	0250	0400	0500	0650	0800	1000	1500
Flange-Ø	D-PN	95	105	115	150	165	185	200	235	300
Face-to-face dimension	FF	140	150	160	200	230	290	310	350	550
Height	H	130	130	140	175	200	260	310	350	380
Handwheel-Ø	B	100	100	100	125	125	200	250	315	360
Wrench size across flats	S_1	7	7	7	10	10	10	10	12	15
Wrench size across flats	S_2	30	30	30	36	36	36	36	41	41
Weight	ca. kg	3.0	3.5	4.5	9.0	13.0	21.0	28.0	42.0	83.0
Kvs-Value	m^3/h	4.3	6.7	11.5	22.6	37.1	71.1	104.0	170.0	350.0
Cv-Value	gal/min	5.0	7.8	13.4	26.3	43.2	82.9	121.3	198.3	408.4

Dimensions in mm. Compliance of tightness requirements acc. to EN 1626 for DN150 up to 20 bar differential pressure. In the range of >20-40 bar, 350-700ml per second (1 bar, 20°C [68°F]) are reached.

Edition 2022-11

Globe Valves

Type 03331 - Globe Valve, ANSI Flanges

Cryogenic-Globe and Globe/Check Valves, class 300

Stainless steel body and bronze topwork,
" live loaded " gland packing
" cleaned and degreased for oxygen service "

Part No. 03331.X.0003
Part No. 03331.X.5003 Globe/Check Valve
Flanged connection acc. to ANSI B16.5 class 300

Available options - on request only:
· Valve with control disc (tapered design)

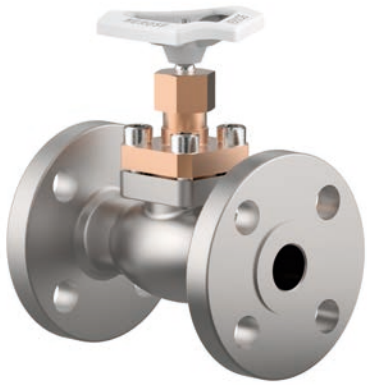

Applications:
Approved for air gases, vapours and cryogenic liquefied gases incl. LNG.
Working temperature: -196°C / -321°F (77K) up to +120°C / +248°F (393K)
Recommended working temperature: -60°C / -76°F (213K) up to +120°C / +248°F (393K)

Materials		DIN EN	ASTM
1	Body	1.4308	A 351 CF8
2	Valve seal up to DN50	PTFE / Carbon filled (25%)	
2a	Valve seal from DN65	PTFE	
3	Disc	CW614N	B 283 UNS C38500
4	Bonnet gasket	PTFE	
5	Headpiece	CC493K	B 505 UNS C93200
6	Bolts	1.4301/A2	A 194 B8
8	Stem	1.4301	A 276 Grade 304
9	Gland packing	Graphite / PTFE	
10	Gland nut	CW614N	B 283 UNS C38500
11	Handwheel	Aluminium alloy	
12	Spring	CW452K	B 159 UNS C51900

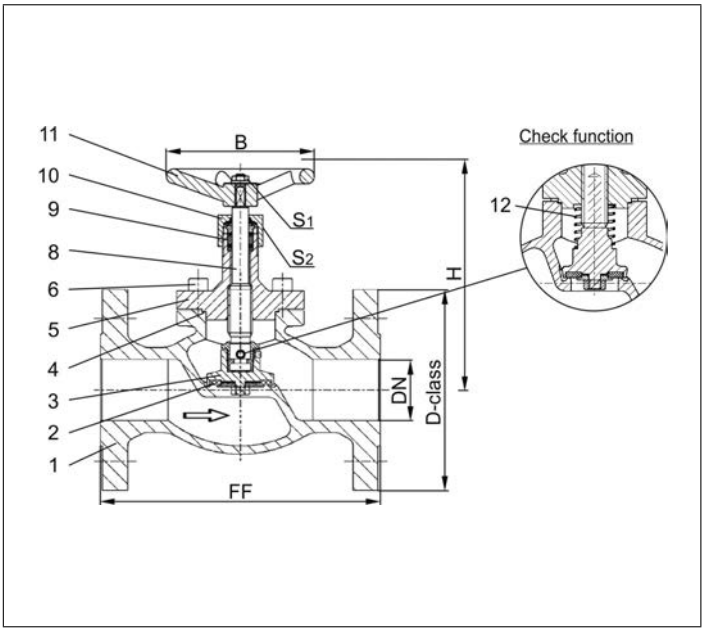

Type 03331 - Standard design	Technical data									
Nominal size	**DN**	**15**	**20**	**25**	**40**	**50**	**65**	**80**	**100**	**150**
Dimension code - Flange ANSI B16.5 class 300	.X.	0400	0600	1000	1400	2000	2400	3000	4000	6000
Flange-Ø	D-class	95	115	125	155	165	190	210	255	320
Face-to-face dimension	FF	140	150	160	200	230	290	310	350	597
Height	H	130	130	140	175	200	260	310	350	380
Handwheel-Ø	B	100	100	100	125	125	200	250	315	360
Wrench size across flats	S_1	7	7	7	10	10	10	10	12	15
Wrench size across flats	S_2	30	30	30	36	36	36	36	41	41
Weight	ca. kg	3.0	3.5	4.5	9.0	13.0	21.0	28.0	42.0	83.0
Kvs-Value	m^3/h	4.3	6.7	11.5	22.6	37.1	71.1	104.0	170.0	350.0
Cv-Value	gal/min	5.0	7.8	13.4	26.3	43.2	82.9	121.3	198.3	408.4

Dimensions in mm. Compliance of tightness requirements acc. to EN 1626 for DN150 up to 20 bar differential pressure. In the range of >20-40 bar, 350-700ml per second (1 bar, 20°C [68°F]) are reached.

Globe Valves

Type 03331 - Globe Valve, ANSI Flanges

Cryogenic-Globe and Globe/Check Valves, class 150

Stainless steel body and bronze topwork,
" live loaded " gland packing
" cleaned and degreased for oxygen service "

Part No. 03331.X.0001
Part No. 03331.X.5001 Globe/Check Valve
Flanged connection acc. to ANSI B16.5 class 150

Available options - on request only:
· Valve with control disc (tapered design)

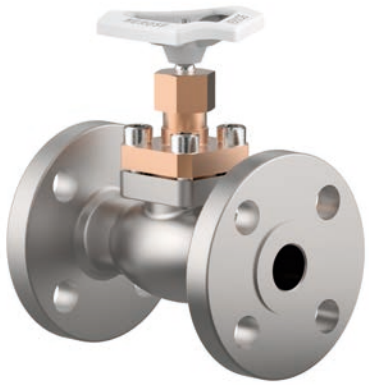

Applications:
Approved for air gases, vapours and cryogenic liquefied gases incl. LNG.
Working temperature: -196°C / -321°F (77K) up to +120°C / +248°F (393K)
Recommended working temperature: -60°C / -76°F (213K) up to +120°C / +248°F (393K)

Materials		DIN EN	ASTM
1	Body	1.4308	A 351 CF8
2	Valve seal up to DN50	PTFE / Carbon filled (25%)	
2a	Valve seal from DN65	PTFE	
3	Disc	CW614N	B 283 UNS C38500
4	Bonnet gasket	PTFE	
5	Headpiece	CC493K	B 505 UNS C93200
6	Bolts	1.4301/A2	A 194 B8
8	Stem	1.4301	A 276 Grade 304
9	Gland packing	Graphite / PTFE	
10	Gland nut	CW614N	B 283 UNS C38500
11	Handwheel	Aluminium alloy	
12	Spring	CW452K	B 159 UNS C51900

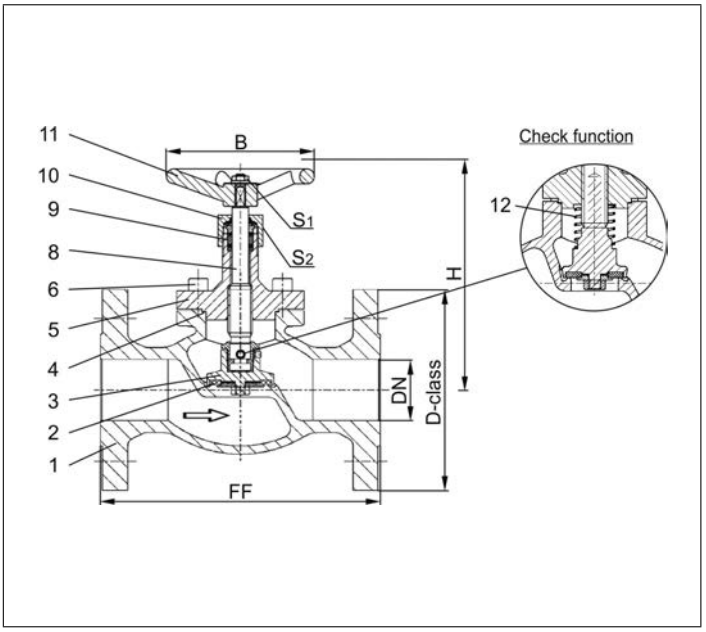

Type 03331 - Standard design	Technical data									
Nominal size	**DN**	**15**	**20**	**25**	**40**	**50**	**65**	**80**	**100**	**150**
Dimension code - Flange ANSI B16.5 class 150	.X.	0400	0600	1000	1400	2000	2400	3000	4000	6000
Flange-Ø	D-class	90	100	110	125	150	180	190	230	280
Face-to-face dimension	FF	140	150	160	200	230	290	310	350	577
Height	H	130	130	140	175	200	260	310	350	380
Handwheel-Ø	B	100	100	100	125	125	200	250	315	360
Wrench size across flats	S_1	7	7	7	10	10	10	10	12	15
Wrench size across flats	S_2	30	30	30	36	36	36	36	41	41
Weight	ca. kg	3.0	3.5	4.5	9.0	13.0	21.0	28.0	42.0	83.0
Kvs-Value	m^3/h	4.3	6.7	11.5	22.6	37.1	71.1	104.0	170.0	350.0
Cv-Value	gal/min	5.0	7.8	13.4	26.3	43.2	82.9	121.3	198.3	408.4

Dimensions in mm. Compliance of tightness requirements acc. to EN 1626 for DN150 up to 20 bar differential pressure. In the range of >20-40 bar, 350-700ml per second (1 bar, 20°C [68°F]) are reached.

Edition 2022-11

Globe Valves

Type 01351 - Globe Valve

Cryogenic-Globe and Globe/Check Valves, PN50 (DN65=PN45, DN150=PN40)

Stainless steel body and topwork,
" live loaded " gland packing
" cleaned and degreased for oxygen service "

Part No. 01351.X.000*
Part No. 01351.X.500* Globe/Check Valve
*Butt weld connection for stainless steel pipes acc. to ISO 1127 or ASTM A312

Part No. 01351.X.0004
Part No. 01351.X.5004 Globe/Check Valve
Socket weld connection for stainless steel pipes acc. to ISO 1127 or ASTM A312

Available options - on request only:
· Welded stainless steel stubs acc. to ISO 1127 or ASTM A312 - length FF + 200mm
· Valve with control disc (tapered design)
· Further pipe wall thicknesses

Applications:
Approved for air gases, vapours and cryogenic liquefied gases incl. LNG.
Working temperature: -196°C / -321°F (77K) up to +120°C / +248°F (393K)
Recommended working temperature: -60°C / -76°F (213K) up to +120°C / +248°F (393K)

Materials		DIN EN	ASTM
1	Body	1.4308	A 351 CF8
2	Valve seal up to DN50	PTFE / Carbon filled (25%)	
2a	Valve seal from DN65	PTFE	
3	Disc	1.4301	A 276 Grade 304
4	Bonnet gasket	PTFE	
5	Headpiece	1.4301 / 1.4308	A 276 Grade 304 / A 351 CF8
6	Bolts	1.4301/A2	A 194 B8
8	Stem	1.4301	A 276 Grade 304
9	Gland packing	Graphite / PTFE / MICA	
10	Gland nut	1.4305	A 276 Grade 303
11	Handwheel	Aluminium alloy	
12	Spring	1.4310	A 313 Grade 301
13	Bush	CW452K	B 159 UNS C51900

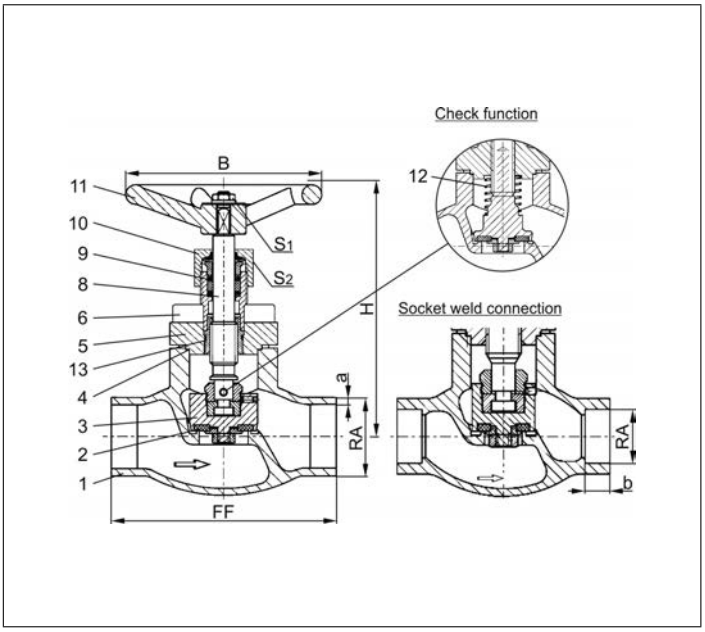

Type 01351 - Standard design	Technical data													
Nominal size	**DN**	**10**	**15**	**15**	**20**	**25**	**32**	**40**	**40**	**50**	**65**	**80**	**100**	**150**
Dimension code	.X.	1012	1517	1521	2026	2533	3238	4042	4048	5060	657x	8088	0114	0168
Face-to-face dimension	FF	70	85	85	100	115	115	130	130	155	205	245	280	400
Height	H	140	140	140	140	140	170	175	175	200	260	310	350	420
Outside pipe-Ø ISO 1127	RA	12.0	17.2	21.3	26.9	33.7	38.0	42.4	48.3	60.3	76.1	88.9	114.3	168.3
Wall thickness pipe ISO 1127	a	1.0	1.6	2.0	2.0	2.0	2.0	2.0	2.0	2.0	2.9	3.2	6.0	7.1
Outside pipe-Ø ASTM A312	RA	13.72	17.15	21.34	26.67	33.40	-	42.16	48.26	60.32	73.02	88.90	114.30	168.27
Wall thickness pipe ASTM A312	a	dimensions acc. to S10 or S40												
Socket depth	b	6	10	10	13	13	-	13	13	16	16	16	20	20
Handwheel-Ø	B	100	100	100	100	100	125	125	125	125	200	250	315	360
Wrench size across flats	S_1	7	7	7	7	7	10	10	10	10	10	10	12	15
Wrench size across flats	S_2	30	30	30	30	30	36	36	36	36	36	36	41	41
Weight	ca. kg	1.0	1.25	1.3	1.7	2.0	2.8	4.2	4.2	6.7	10.7	16.0	23.0	54.1
Kvs-Value	m^3/h	1.6	3.8	4.3	6.7	11.5	14.0	20.6	22.6	37.1	71.1	104.0	170.0	350.0
Cv-Value	gal/min	1.9	4.4	5.0	7.8	13.4	16.2	23.9	26.3	43.2	82.9	121.3	198.3	408.4

Dimensions in mm. Compliance of tightness requirements acc. to EN 1626 for DN150 up to 20 bar differential pressure. In the range of >20-40 bar, 350-700ml per second (1 bar, 20°C [68°F]) are reached.

Edition 2022-11

Phone: +49 4531 509-0

Globe Valves

Type 01355 - Globe Valve

Cryogenic-Globe and Globe/Check Valves, PN50

Stainless steel body and topwork,
" live loaded " gland packing
" cleaned and degreased for oxygen service "

Part No. 01355.X.0001
Part No. 01355.X.5001 Globe/Check Valve
Female thread connection (G) acc. to ISO 228/1

Part No. 01355.X.0006
Part No. 01355.X.5006 Globe/Check Valve
Female thread connection NPT acc. to ANSI B 1.20.1

Available options - on request only:
· Female thread connection (R) acc. to ISO 7-Rc
· Valve with control disc (tapered design)

Applications:
Approved for air gases, vapours and cryogenic liquefied gases incl. LNG.
Working temperature: -196°C / -321°F (77K) up to +120°C / +248°F (393K)
Recommended working temperature: -60°C / -76°F (213K) up to +120°C / +248°F (393K)

Materials		DIN EN	ASTM
1	Body	1.4308	A 351 CF8
2	Valve seal	PTFE / Carbon filled (25%)	
3	Disc	1.4301	A 276 Grade 304
4	Bonnet gasket	PTFE	
5	Headpiece	1.4301 / 1.4308	A 276 Grade 304 / A 351 CF8
6	Bolts	1.4301/A2	A 194 B8
8	Stem	1.4301	A 276 Grade 304
9	Gland packing	Graphite / PTFE / MICA	
10	Gland nut	1.4305	A 276 Grade 303
11	Handwheel	Aluminium alloy	
12	Spring	1.4310	A 313 Grade 301
13	Bush	CW452K	B 159 UNS C51900

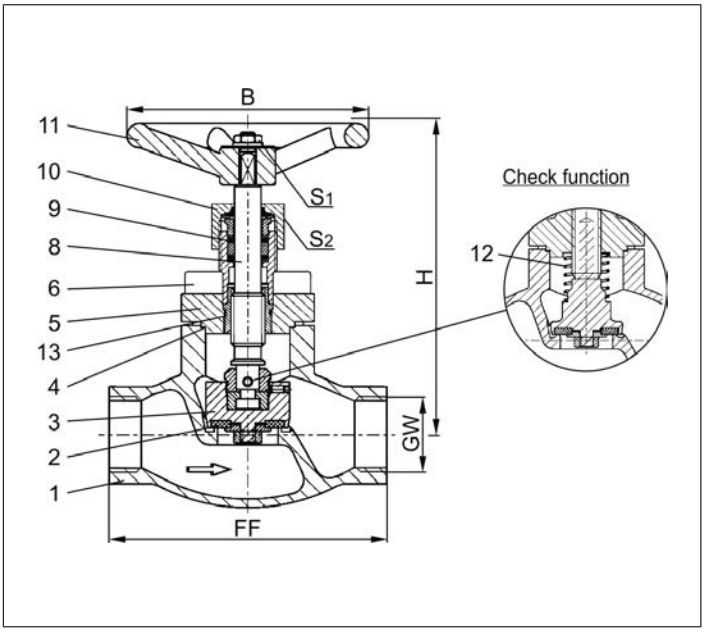

Type 01355 - Standard design	Technical data								
Nominal size	**DN**	**10**	**10**	**15**	**20**	**25**	**40**	**40**	**50**
Thread size	GW	1/4	3/8	1/2	3/4	1	1-1/4	1-1/2	2
Dimension code	.X.	0200	0300	0400	0600	1000	1200	1400	2000
Face-to-face dimension	FF	70	70	85	100	115	130	130	155
Height	H	140	140	140	140	140	175	175	200
Handwheel-Ø	B	100	100	100	100	100	125	125	125
Wrench size across flats	S_1	7	7	7	7	7	10	10	10
Wrench size across flats	S_2	30	30	30	30	30	36	36	36
Weight	ca. kg	1.0	1.0	1.3	1.7	2.0	4.2	4.2	6.7
Kvs-Value	m^3/h	1.6	2.2	4.3	6.7	11.5	20.6	22.6	37.1
Cv-Value	gal/min	1.9	2.6	5.0	7.8	13.4	23.9	26.3	43.2

Dimensions in mm.

Edition 2022-11

Globe Valves

Type 03351 - Globe Valve, DIN EN Flanges

Cryogenic-Globe and Globe/Check Valves, PN40

Stainless steel body and topwork,
" live loaded " gland packing
" cleaned and degreased for oxygen service "

Part No. 03351.X.0002
Part No. 03351.X.5002 Globe/Check Valve
Flanged connection acc. to DIN EN 1092-1 PN40

Available options - on request only:
· Valve with control disc (tapered design)

Applications:
Approved for air gases, vapours and cryogenic liquefied gases incl. LNG.
Working temperature: -196°C / -321°F (77K) up to +120°C / +248°F (393K)
Recommended working temperature: -60°C / -76°F (213K) up to +120°C / +248°F (393K)

Materials		DIN EN	ASTM
1	Body	1.4308	A 351 CF8
2	Valve seal up to DN50	PTFE / Carbon filled (25%)	
2a	Valve seal from DN65	PTFE	
3	Disc	1.4301	A 276 Grade 304
4	Bonnet gasket	PTFE	
5	Headpiece	1.4301 / 1.4308	A 276 Grade 304 / A 351 CF8
6	Bolts	1.4301/A2	A 194 B8
8	Stem	1.4301	A 276 Grade 304
9	Gland packing	Graphite / PTFE / MICA	
10	Gland nut	1.4305	A 276 Grade 303
11	Handwheel	Aluminium alloy	
12	Spring	1.4310	A 313 Grade 301
13	Bush	CW452K	B 159 UNS C51900

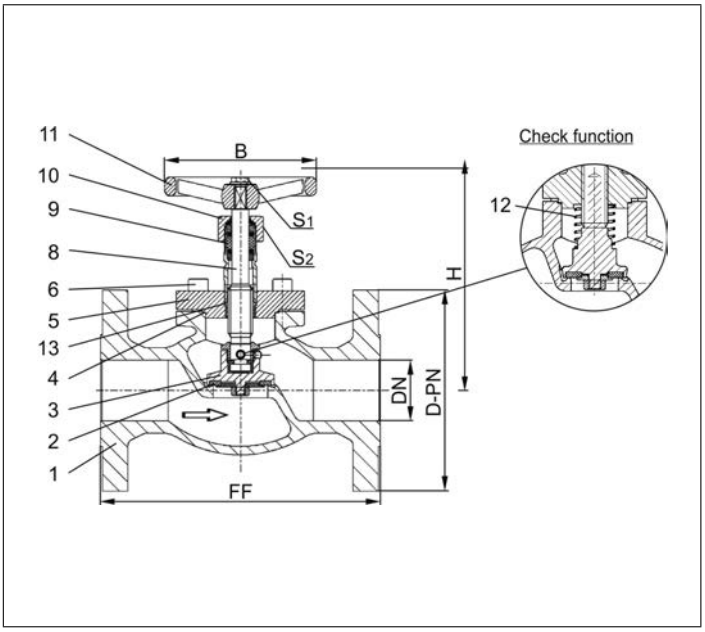

Type 03351 - Standard design	Technical data									
Nominal size	**DN**	**15**	**20**	**25**	**40**	**50**	**65**	**80**	**100**	**150**
Dimension code - Flange EN 1092-1 PN40	.X.	0150	0200	0250	0400	0500	0650	0800	1000	1500
Flange-Ø	D-PN	95	105	115	150	165	185	200	235	300
Face-to-face dimension	FF	140	150	160	200	230	290	310	350	550
Height	H	130	130	140	170	200	260	310	350	380
Handwheel-Ø	B	100	100	100	125	125	200	250	315	360
Wrench size across flats	S_1	7	7	7	10	10	10	10	12	15
Wrench size across flats	S_2	30	30	30	36	36	36	36	41	41
Weight	ca. kg	3.0	3.5	4.5	9.0	13.0	21.0	28.0	42.0	83.0
Kvs-Value	m^3/h	4.3	6.7	11.5	22.6	37.1	71.1	104.0	170.0	350.0
Cv-Value	gal/min	5.0	7.8	13.4	26.3	43.2	82.9	121.3	198.3	408.4

Dimensions in mm. Compliance of tightness requirements acc. to EN 1626 for DN150 up to 20 bar differential pressure. In the range of >20-40 bar, 350-700ml per second (1 bar, 20°C [68°F]) are reached.

Globe Valves

Type 03351 - Globe Valve, ANSI Flanges

Cryogenic-Globe and Globe/Check Valves, class 300

Stainless steel body and topwork,
" live loaded " gland packing
" cleaned and degreased for oxygen service "

Part No. 03351.X.0003
Part No. 03351.X.5003 Globe/Check Valve
Flanged connection acc. to ANSI B16.5 class 300

Available options - on request only:
· Valve with control disc (tapered design)

Applications:
Approved for air gases, vapours and cryogenic liquefied gases incl. LNG.
Working temperature: -196°C / -321°F (77K) up to +120°C / +248°F (393K)
Recommended working temperature: -60°C / -76°F (213K) up to +120°C / +248°F (393K)

Materials		DIN EN	ASTM
1	Body	1.4308	A 351 CF8
2	Valve seal up to DN50	PTFE / Carbon filled (25%)	
2a	Valve seal from DN65	PTFE	
3	Disc	1.4301	A 276 Grade 304
4	Bonnet gasket	PTFE	
5	Headpiece	1.4301 / 1.4308	A 276 Grade 304 / A 351 CF8
6	Bolts	1.4301/A2	A 194 B8
8	Stem	1.4301	A 276 Grade 304
9	Gland packing	Graphite / PTFE / MICA	
10	Gland nut	1.4305	A 276 Grade 303
11	Handwheel	Aluminium alloy	
12	Spring	1.4310	A 313 Grade 301
13	Bush	CW452K	B 159 UNS C51900

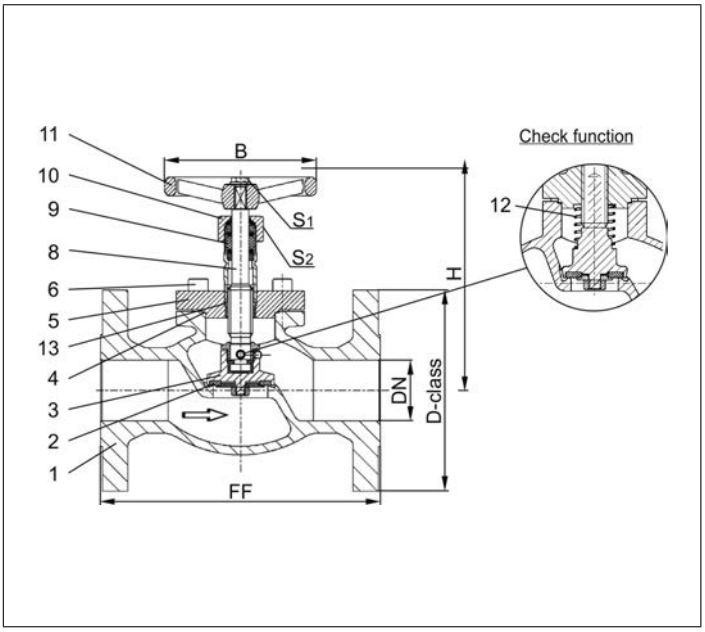

Type 03351 - Standard design	Technical data									
Nominal size	**DN**	**15**	**20**	**25**	**40**	**50**	**65**	**80**	**100**	**150**
Dimension code - Flange ANSI B16.5 class 300	.X.	0400	0600	1000	1400	2000	2400	3000	4000	6000
Flange-Ø	D-class	95	115	125	155	165	190	210	255	320
Face-to-face dimension	FF	140	150	160	200	230	290	310	350	597
Height	H	130	130	140	170	200	260	310	350	380
Handwheel-Ø	B	100	100	100	125	125	200	250	315	360
Wrench size across flats	S_1	7	7	7	10	10	10	10	12	15
Wrench size across flats	S_2	30	30	30	36	36	36	36	41	41
Weight	ca. kg	3.0	3.5	4.5	9.0	13.0	21.0	28.0	42.0	83.0
Kvs-Value	m^3/h	4.3	6.7	11.5	22.6	37.1	71.1	104.0	170.0	350.0
Cv-Value	gal/min	5.0	7.8	13.4	26.3	43.2	82.9	121.3	198.3	408.4

Dimensions in mm. Compliance of tightness requirements acc. to EN 1626 for DN150 up to 20 bar differential pressure. In the range of >20-40 bar, 350-700ml per second (1 bar, 20°C [68°F]) are reached.

Edition 2022-11

Globe Valves

Type 03351 - Globe Valve, ANSI Flanges

Cryogenic-Globe and Globe/Check Valves, class 150

Stainless steel body and topwork,
" live loaded " gland packing
" cleaned and degreased for oxygen service "

Part No. 03351.X.0001
Part No. 03351.X.5001 Globe/Check Valve
Flanged connection acc. to ANSI B16.5 class 150

Available options - on request only:
· Valve with control disc (tapered design)

Applications:
Approved for air gases, vapours and cryogenic liquefied gases incl. LNG.
Working temperature: -196°C / -321°F (77K) up to +120°C / +248°F (393K)
Recommended working temperature: -60°C / -76°F (213K) up to +120°C / +248°F (393K)

Materials		DIN EN	ASTM
1	Body	1.4308	A 351 CF8
2	Valve seal up to DN50	PTFE / Carbon filled (25%)	
2a	Valve seal from DN65	PTFE	
3	Disc	1.4301	A 276 Grade 304
4	Bonnet gasket	PTFE	
5	Headpiece	1.4301 / 1.4308	A 276 Grade 304 / A 351 CF8
6	Bolts	1.4301/A2	A 194 B8
8	Stem	1.4301	A 276 Grade 304
9	Gland packing	Graphite / PTFE / MICA	
10	Gland nut	1.4305	A 276 Grade 303
11	Handwheel	Aluminium alloy	
12	Spring	1.4310	A 313 Grade 301
13	Bush	CW452K	B 159 UNS C51900

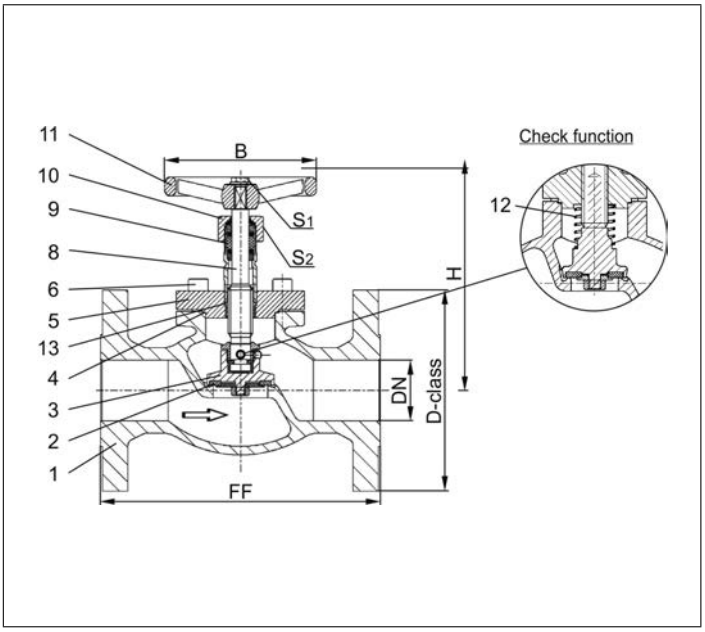

Type 03351 - Standard design	Technical data									
Nominal size	**DN**	**15**	**20**	**25**	**40**	**50**	**65**	**80**	**100**	**150**
Dimension code - Flange ANSI B16.5 class 150	.X.	0400	0600	1000	1400	2000	2400	3000	4000	6000
Flange-Ø	D-class	90	100	110	125	150	180	190	230	280
Face-to-face dimension	FF	140	150	160	200	230	290	310	350	577
Height	H	130	130	140	170	200	260	310	350	380
Handwheel-Ø	B	100	100	100	125	125	200	250	315	360
Wrench size across flats	S_1	7	7	7	10	10	10	10	12	15
Wrench size across flats	S_2	30	30	30	36	36	36	36	41	41
Weight	ca. kg	3.0	3.5	4.5	9.0	13.0	21.0	28.0	42.0	83.0
Kvs-Value	m^3/h	4.3	6.7	11.5	22.6	37.1	71.1	104.0	170.0	350.0
Cv-Value	gal/min	5.0	7.8	13.4	26.3	43.2	82.9	121.3	198.3	408.4

Dimensions in mm. Compliance of tightness requirements acc. to EN 1626 for DN150 up to 20 bar differential pressure. In the range of >20-40 bar, 350-700ml per second (1 bar, 20°C [68°F]) are reached.

Globe Valves

Type 01311 - Globe Valve

Cryogenic-Globe and Globe/Check Valves, PN50

Bronze body and topwork
" live loaded " gland packing
" cleaned and degreased for oxygen service "

Part No. 01311.X.0010 (H=270mm)
Part No. 01311.X.0020 (H=370mm)
Part No. 01311.X.5010 (H=270mm) Globe/Check Valve
Part No. 01311.X.5020 (H=370mm) Globe/Check Valve
Socket end for copper pipes acc. to DIN EN 12449 or ASTM B88

Available options - on request only:
· Socket end for stainless steel stubs acc. to ISO 1127
· Extension H up to 900mm
· Valve with control disc (tapered design)

Applications:
Approved for air gases, vapours and cryogenic liquefied gases incl. LNG.
Working temperature: -196°C / -321°F (77K) up to +120°C / +248°F (393K)

Materials		DIN EN	ASTM
1	Body	CC491K	B 62 UNS C83600
2	Valve seal	PTFE / Carbon filled (25%)	
3	Disc	CW614N	B 283 UNS C38500
4	Bonnet gasket	PTFE	
5	Headpiece	CC493K	B 505 UNS C93200
6	Bolts	1.4301/A2	A 194 B8
7	Elongation tube	1.4541	A 213 TP 321
8	Stem	1.4301	A 276 Grade 304
9	Gland packing	Graphite / PTFE / MICA	
10	Gland nut	CW614N	B 283 UNS C38500
11	Handwheel	Aluminium alloy	
12	Spring	CW452K	B 159 UNS C51900

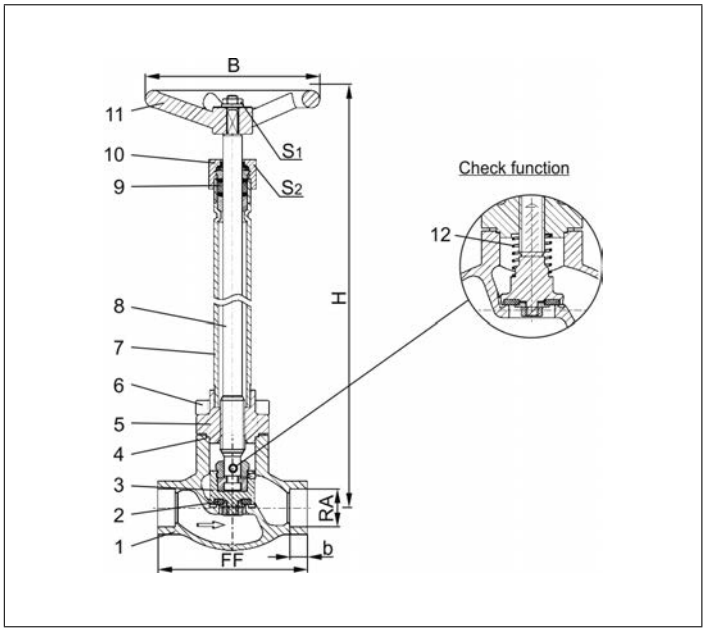

Type 01311 - Standard design	Technical data							
Nominal size	**DN**	**10**	**15**	**20**	**25**	**32**	**40**	**50**
Dimension code	.X.	X=DNRA. Example: valve DN15 for copper stub RA$_{Ø}$18mm. X=1518						
Face-to-face dimension	FF	60	85	85	115	115	140	160
Height	H	270mm or 370mm						
Outside pipe-Ø	RA	dependent on order						
Socket depth	b	6	6	8	8	10	13	20
Handwheel-Ø	B	100	100	100	100	125	125	125
Wrench size across flats	S_1	7	7	7	7	10	10	10
Wrench size across flats	S_2	30	30	30	30	36	36	36
Weight	ca. kg	1.4	1.7	2.1	2.4	3.3	4.7	7.2
Kvs-Value	m^3/h	1.6	4.3	6.7	11.5	12.1	22.6	37.1
Cv-Value	gal/min	1.9	5.0	7.8	13.4	14.1	26.3	43.2

Dimensions in mm.

Edition 2022-11

Globe Valves

Type 01311 - Globe Valve

Cryogenic-Globe and Globe/Check Valves, PN50 (DN10-25), PN40 (DN32), PN35 (DN40-50)

Bronze body and topwork
" live loaded " gland packing
" cleaned and degreased for oxygen service "

Part No. 01311.X.0018 (H=270mm)
Part No. 01311.X.0028 (H=370mm)
Part No. 01311.X.5018 (H=270mm) Globe/Check Valve
Part No. 01311.X.5028 (H=370mm) Globe/Check Valve
Complete with copper stubs acc. to DIN EN 12449

Available options - on request only:
· Extension H up to 900mm
· Valve with control disc (tapered design)

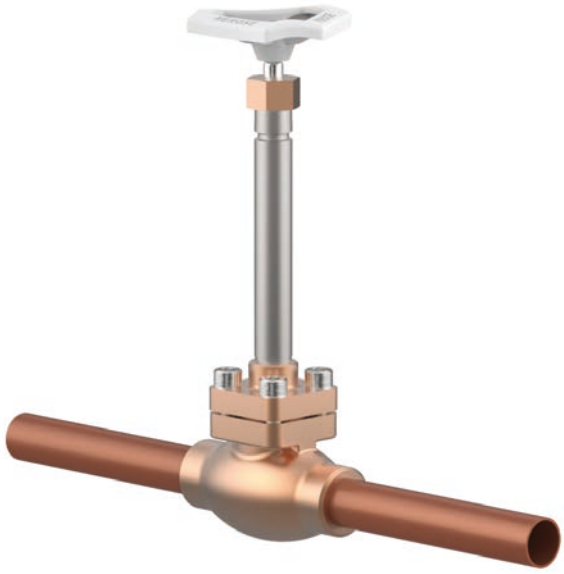

Applications:
Approved for air gases, vapours and cryogenic liquefied gases incl. LNG.
Working temperature: -196°C / -321°F (77K) up to +120°C / +248°F (393K)

Materials		DIN EN	ASTM
1	Body	CC491K	B 62 UNS C83600
2	Valve seal	PTFE / Carbon filled (25%)	
3	Disc	CW614N	B 283 UNS C38500
4	Bonnet gasket	PTFE	
5	Headpiece	CC493K	B 505 UNS C93200
6	Bolts	1.4301/A2	A 194 B8
7	Elongation tube	1.4541	A 213 TP 321
8	Stem	1.4301	A 276 Grade 304
9	Gland packing	Graphite / PTFE / MICA	
10	Gland nut	CW614N	B 283 UNS C38500
11	Handwheel	Aluminium alloy	
12	Spring	CW452K	B 159 UNS C51900
13	Copper stubs	CW024A	B 152 UNS C12200

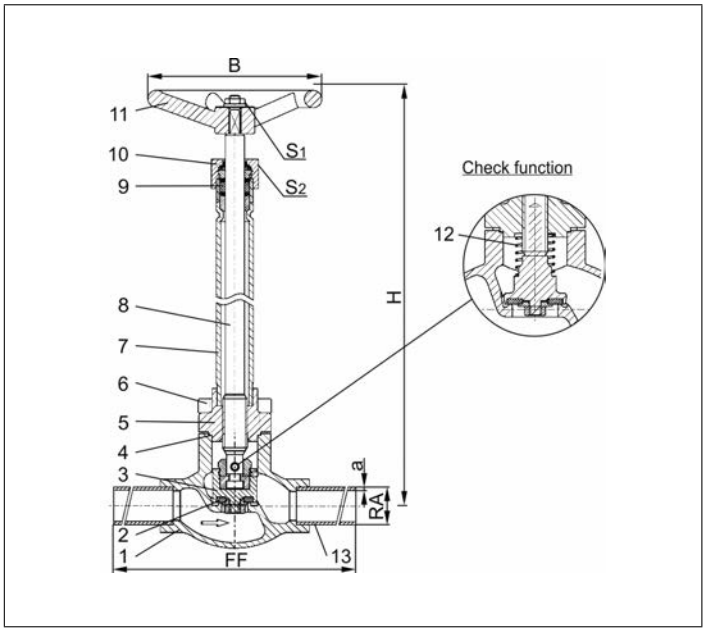

Type 01311 - Standard design	Technical data								
Nominal size	**DN**	**10**	**15**	**15**	**20**	**25**	**32**	**40**	**50**
Dimension code	.X.	1012	1515	1518	2022	2528	3235	4042	5054
Face-to-face dimension	FF	360	385	385	385	415	415	420	460
Height	H	270mm or 370mm							
Outside pipe-Ø	RA	12.0	15.0	18.0	22.0	28.0	35.0	42.0	54.0
Wall thickness pipe	a	1.0	1.5	1.5	1.5	1.5	1.5	1.5	2.0
Handwheel-Ø	B	100	100	100	100	100	125	125	125
Wrench size across flats	S_1	7	7	7	7	7	10	10	10
Wrench size across flats	S_2	30	30	30	30	30	36	36	36
Weight	ca. kg	1.5	1.9	1.9	2.4	2.8	3.7	5.2	7.8
Kvs-Value	m^3/h	2.2	4.3	4.3	6.7	11.5	12.1	22.6	37.1
Cv-Value	gal/min	2.6	5.0	5.0	7.8	13.4	14.1	26.3	43.2

Dimensions in mm.

Globe Valves

Type 01311 - Globe Valve

Cryogenic-Globe and Globe/Check Valves, PN50

Bronze body and topwork
" live loaded " gland packing
" cleaned and degreased for oxygen service "

Part No. 01311.X.0017 (H=270mm)
Part No. 01311.X.0027 (H=370mm)
Part No. 01311.X.5017 (H=270mm) Globe/Check Valve
Part No. 01311.X.5027 (H=370mm) Globe/Check Valve
Complete with stainless steel stubs acc. to DIN EN 10216-5 or ASTM A312

Available options - on request only:
· Extension H up to 900mm
· Valve with control disc (tapered design)
· Further pipe wall thicknesses

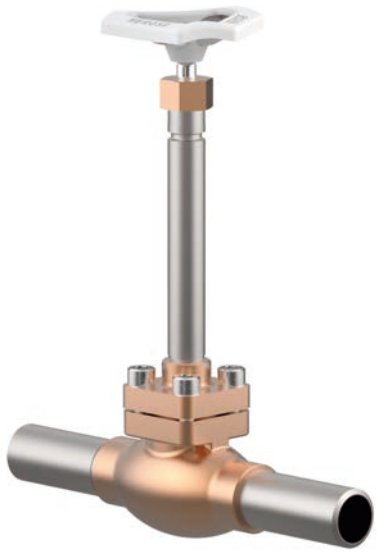

Applications:
Approved for air gases, vapours and cryogenic liquefied gases incl. LNG.
Working temperature: -196°C / -321°F (77K) up to +120°C / +248°F (393K)

Materials		DIN EN	ASTM
1	Body	CC491K	B 62 UNS C83600
2	Valve seal	PTFE / Carbon filled (25%)	
3	Disc	CW614N	B 283 UNS C38500
4	Bonnet gasket	PTFE	
5	Headpiece	CC493K	B 505 UNS C93200
6	Bolts	1.4301/A2	A 194 B8
7	Elongation tube	1.4541	A 213 TP 321
8	Stem	1.4301	A 276 Grade 304
9	Gland packing	Graphite / PTFE / MICA	
10	Gland nut	CW614N	B 283 UNS C38500
11	Handwheel	Aluminium alloy	
12	Spring	CW452K	B 159 UNS C51900
13	Stainless steel stubs	1.4306	A 312 TP304L

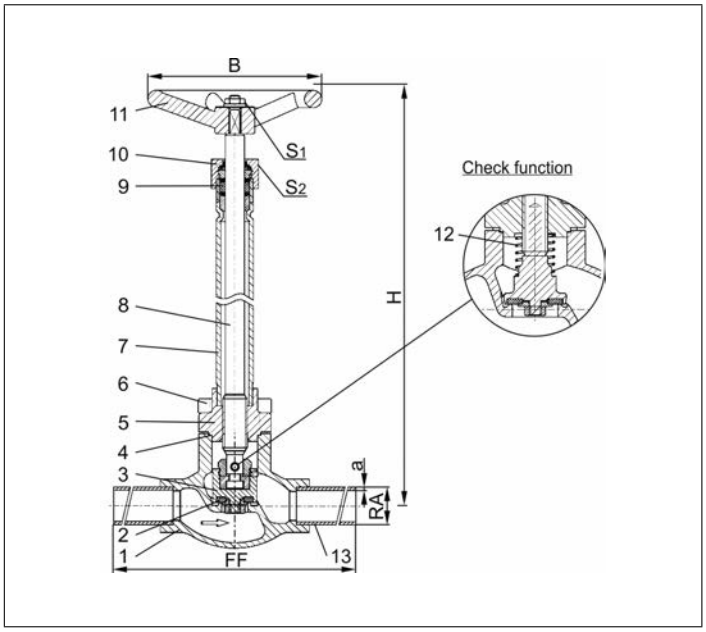

Type 01311 - Standard design	Technical data								
Nominal size	**DN**	**10**	**10**	**15**	**20**	**25**	**32**	**40**	**50**
Dimension code	.X.	1012	1017	1521	2027	2533	3242	4048	5060
Face-to-face dimension	FF	210	210	235	235	265	265	290	310
Height	H	270mm or 370mm							
Outside pipe-Ø ISO 1127	RA	12.0	17.2	21.3	26.9	33.7	42.4	48.3	60.3
Wall thickness pipe ISO 1127	a	1.0	2.3	2.6	2.9	3.2	3.2	3.6	3.6
Outside pipe-Ø ASTM A312	RA	-	17.15	21.34	26.67	33.4	42.16	48.26	60.33
Wall thickness pipe ASTM A312	a	dimensions acc. to S10 or S40							
Handwheel-Ø	B	100	100	100	100	100	125	125	125
Wrench size across flats	S_1	7	7	7	7	7	10	10	10
Wrench size across flats	S_2	30	30	30	30	30	36	36	36
Weight	ca. kg	1.45	1.55	2.0	2.4	2.8	3.7	5.2	7.8
Kvs-Value	m^3/h	2.2	2.2	4.3	6.7	11.5	12.1	22.6	37.1
Cv-Value	gal/min	2.6	2.6	5.0	7.8	13.4	14.1	26.3	43.2

Dimensions in mm.

Edition 2022-11

Globe Valves

Type 01315 - Globe Valve

Cryogenic-Globe and Globe/Check Valves, PN50

Bronze body and topwork
" live loaded " gland packing
" cleaned and degreased for oxygen service "

Part No. 01315.X.0011 (H=270mm)
Part No. 01315.X.0021 (H=370mm)
Part No. 01315.X.5011 (H=270mm) Globe/Check Valve
Part No. 01315.X.5021 (H=370mm) Globe/Check Valve
Female thread connection (G) acc. to ISO 228/1

Part No. 01315.X.0016 (H=270mm)
Part No. 01315.X.0026 (H=370mm)
Part No. 01315.X.5016 (H=270mm) Globe/Check Valve
Part No. 01315.X.5026 (H=370mm) Globe/Check Valve
Female thread connection NPT acc. to ANSI B 1.20.1

Available options - on request only:
· Female thread connection (R) acc. to ISO 7-Rc
· Extension H up to 900mm
· Valve with control disc (tapered design)

Applications:
Approved for air gases, vapours and cryogenic liquefied gases incl. LNG.
Working temperature: -196°C / -321°F (77K) up to +120°C / +248°F (393K)

Materials		DIN EN	ASTM
1	Body	CC491K	B 62 UNS C83600
2	Valve seal	PTFE / Carbon filled (25%)	
3	Disc	CW614N	B 283 UNS C38500
4	Bonnet gasket	PTFE	
5	Headpiece	CC493K	B 505 UNS C93200
6	Bolts	1.4301/A2	A 194 B8
7	Elongation tube	1.4541	A 213 TP 321
8	Stem	1.4301	A 276 Grade 304
9	Gland packing	Graphite / PTFE	
10	Gland nut	CW614N	B 283 UNS C38500
11	Handwheel	Aluminium alloy	
12	Spring	CW452K	B 159 UNS C51900

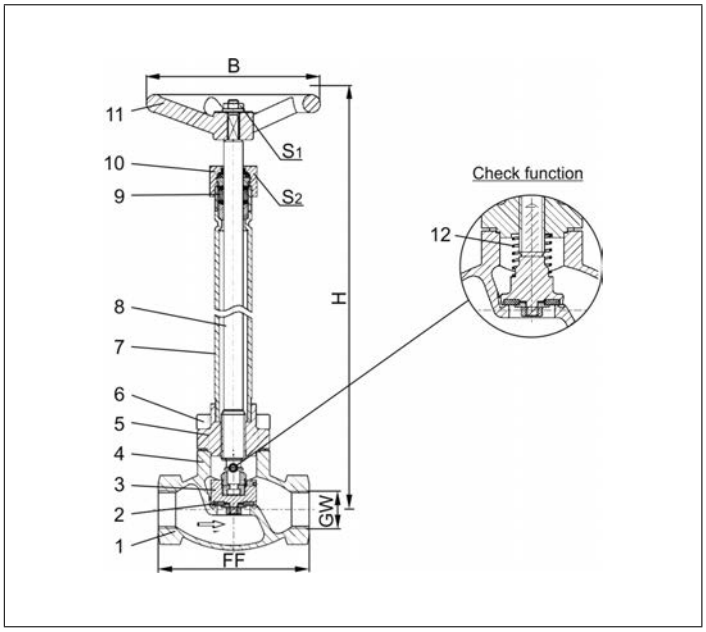

Type 01315 - Standard design	Technical data								
Nominal size	**DN**	**10**	**10**	**15**	**20**	**25**	**32**	**40**	**50**
Thread size	GW	1/4	3/8	1/2	3/4	1	1-1/4	1-1/2	2
Dimension code	.X.	0200	0300	0400	0600	1000	1200	1400	2000
Face-to-face dimension	FF	60	60	85	85	115	115	140	160
Height	H	270mm or 370mm							
Handwheel-Ø	B	100	100	100	100	100	125	125	125
Wrench size across flats	S_1	7	7	7	7	7	10	10	10
Wrench size across flats	S_2	30	30	30	30	30	36	36	36
Weight	ca. kg	1.4	1.4	1.7	2.1	2.4	3.3	4.7	7.2
Kvs-Value	m^3/h	1.6	2.2	4.3	6.7	11.5	20.6	22.6	37.1
Cv-Value	gal/min	1.9	2.6	5.0	7.8	13.4	23.9	26.3	43.2

Dimensions in mm.

Globe Valves

Type 02411 - Globe Valve

Cryogenic-Globe and Globe/Check Valves, PN50

Bronze body and topwork,
" live loaded " gland packing
" cleaned and degreased for oxygen service "

Part No. 02411.X.0011 (H=270mm)
Part No. 02411.X.0021 (H=370mm)
Part No. 02411.X.5011 (H=270mm) Globe/Check Valve
Part No. 02411.X.5021 (H=370mm) Globe/Check Valve
Male thread for union connection

Available options - on request only:
· Extension H up to 900mm
· Valve with control disc (tapered design)

Applications:
Approved for air gases, vapours and cryogenic liquefied gases incl. LNG.
Working temperature: -196°C / -321°F (77K) up to +120°C / +248°F (393K)

Materials		DIN EN	ASTM
1	Body	CC491K	B 62 UNS C83600
2	Valve seal	PTFE / Carbon filled (25%)	
3	Disc	CW614N	B 283 UNS C38500
4	Bonnet gasket	PTFE	
5	Headpiece	CC493K	B 505 UNS C93200
6	Bolts	1.4301/A2	A 194 B8
7	Elongation tube	1.4541	A 213 TP 321
8	Stem	1.4301	A 276 Grade 304
9	Gland packing	Graphite / PTFE	
10	Gland nut	CW614N	B 283 UNS C38500
11	Handwheel	Aluminium alloy	
12	Spring	CW452K	B 159 UNS C51900

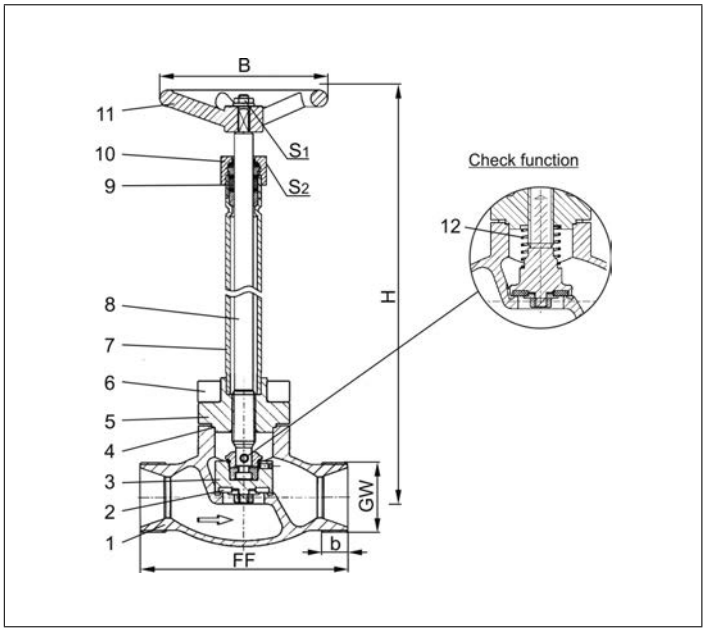

Type 02411 - Standard design	Technical data					
Nominal size	**DN**	**10**	**20**	**32**	**40**	**50**
Dimension code	.X.	0100	0200	0320	0400	0500
Face-to-face dimension	FF	60	85	115	140	160
Height	H	270 mm or 370 mm				
Union thread	GW	M26x1.5	M40x2.0	M55x2.0	M65x2.0	M78x2.0
Thread length	b	10	11	14	17	20
Handwheel-Ø	B	100	100	125	125	125
Wrench size across flats	S_1	7	7	10	10	10
Wrench size across flats	S_2	30	30	36	36	36
Weight	ca. kg	1.4	2.1	3.3	4.7	7.2
Kvs-Value	m^3/h	2.2	6.7	12.1	22.6	37.1
Cv-Value	gal/min	2.6	7.8	14.1	26.3	43.2

Dimensions in mm.

Edition 2022-11

Globe Valves

Type 02411 - Globe Valve

Cryogenic-Globe and Globe/Check Valves, PN50

Bronze body and topwork,
" live loaded " gland packing
" cleaned and degreased for oxygen service "

Part No. 02411.X.0018 (H=270mm)
Part No. 02411.X.0028 (H=370mm)
Part No. 02411.X.5018 (H=270mm) Globe/Check Valve
Part No. 02411.X.5028 (H=370mm) Globe/Check Valve
Completed with union type braze fittings for copper pipes acc. to DIN EN 12449 or ASTM B88

Available options - on request only:
· Extension H up to 900mm
· Valve with control disc (tapered design)

Applications:
Approved for air gases, vapours and cryogenic liquefied gases incl. LNG.
Working temperature: -196°C / -321°F (77K) up to +120°C / +248°F (393K)

Materials		DIN EN	ASTM
1	Body	CC491K	B 62 UNS C83600
2	Valve seal	PTFE / Carbon filled (25%)	
3	Disc	CW614N	B 283 UNS C38500
4	Bonnet gasket	PTFE	
5	Headpiece	CC493K	B 505 UNS C93200
6	Bolts	1.4301/A2	A 194 B8
7	Elongation tube	1.4541	A 213 TP 321
8	Stem	1.4301	A 276 Grade 304
9	Gland packing	Graphite / PTFE	
10	Gland nut	CW614N	B 283 UNS C38500
11	Handwheel	Aluminium alloy	
12	Spring	CW452K	B 159 UNS C51900
13	Braze fitting	CC493K	B 505 UNS C93200
14	Union nut	CC493K	B 505 UNS C93200

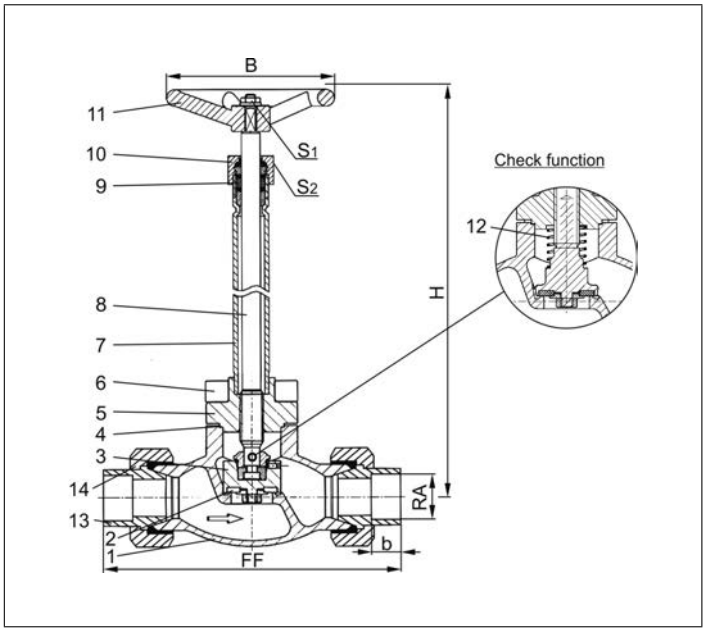

Type 02411 - Standard design	Technical data								
Nominal size	**DN**	**10**	**10**	**20**	**20**	**32**	**32**	**40**	**50**
Dimension code	.X.	1012	1015	1518	2022	2528	3235	4042	5054
Face-to-face dimension	FF	98	98	132	132	171	171	230	230
Height	H	270 mm or 370 mm							
Outside pipe-Ø	RA	12.0	15.0	18.0	22.0	28.0	35.0	42.0	54.0
Socket depth	b	11	11	14	14	17	17	17	17
Handwheel-Ø	B	100	100	100	100	125	125	125	125
Wrench size across flats	S_1	7	7	7	7	10	10	10	10
Wrench size across flats	S_2	30	30	30	30	36	36	36	36
Weight	ca. kg	1.5	1.5	2.8	2.8	4.5	4.5	6.8	10.0
Kvs-Value	m^3/h	1.6	2.2	4.3	6.7	11.5	12.1	22.6	37.1
Cv-Value	gal/min	1.9	2.6	5.0	7.8	13.4	14.1	26.3	43.2

Dimensions in mm.

Globe Valves

Type 02411 - Globe Valve

Cryogenic-Globe and Globe/Check Valves, PN50

Bronze body and topwork,
" live loaded " gland packing
" cleaned and degreased for oxygen service "

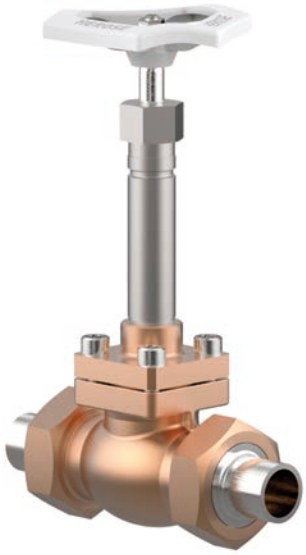

Part No. 02411.X.0017 (H=270mm)
Part No. 02411.X.0027 (H=370mm)
Part No. 02411.X.5017 (H=270mm) Globe/Check Valve
Part No. 02411.X.5027 (H=370mm) Globe/Check Valve
Completed with union type butt weld fittings for stainless steel pipes acc. to ISO 1127 or ASTM A312

Available options - on request only:
· Extension H up to 900mm
· Valve with control disc (tapered design)
· Further pipe wall thicknesses

Applications:
Approved for air gases, vapours and cryogenic liquefied gases incl. LNG.
Working temperature: -196°C / -321°F (77K) up to +120°C / +248°F (393K)

Materials		DIN EN	ASTM
1	Body	CC491K	B 62 UNS C83600
2	Valve seal	PTFE / Carbon filled (25%)	
3	Disc	CW614N	B 283 UNS C38500
4	Bonnet gasket	PTFE	
5	Headpiece	CC493K	B 505 UNS C93200
6	Bolts	1.4301/A2	A 194 B8
7	Elongation tube	1.4541	A 213 TP 321
8	Stem	1.4301	A 276 Grade 304
9	Gland packing	Graphite / PTFE	
10	Gland nut	CW614N	B 283 UNS C38500
11	Handwheel	Aluminium alloy	
12	Spring	CW452K	B 159 UNS C51900
13	Weld fitting	1.4301	A 276 Grade 304
14	Union nut	CC493K	B 505 UNS C93200

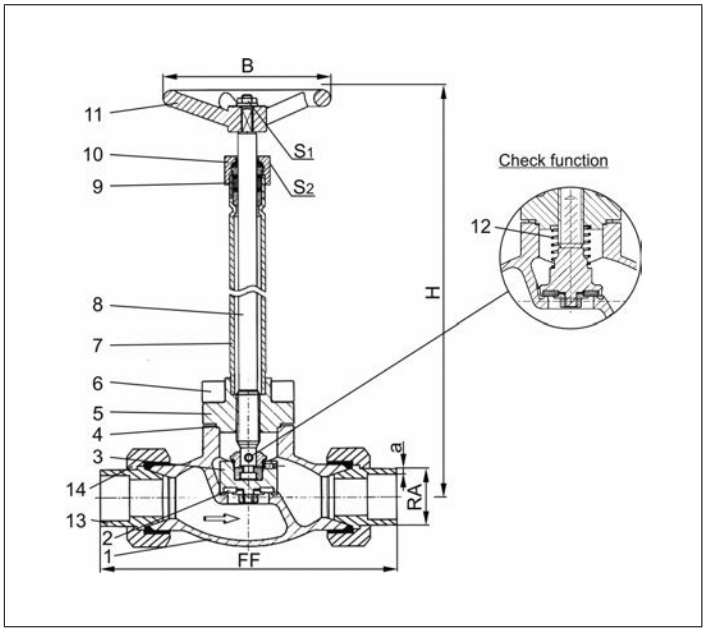

Type 02411 - Standard design	Technical data								
Nominal size	**DN**	**10**	**10**	**20**	**20**	**32**	**32**	**40**	**50**
Dimension code	.X.	1012	1017	1521	2027	2533	3242	4048	5060
Face-to-face dimension	FF	137	141	168	168	203	203	230	263
Height	H	270 mm or 370 mm							
Outside pipe-Ø ISO 1127	RA	12.0	17.2	21.3	26.9	33.7	42.4	48.3	60.3
Wall thickness pipe ISO 1127	a	1.0	2.3	2.6	2.0	3.2	2.0	3.6	3.6
Outside pipe-Ø ASTM A312	RA	-	17.15	21.34	26.67	33.40	42.16	48.26	60.33
Wall thickness pipe ASTM A312	a	dimensions acc. to S10 or S40							
Handwheel-Ø	B	100	100	100	100	125	125	125	125
Wrench size across flats	S_1	7	7	7	7	10	10	10	10
Wrench size across flats	S_2	30	30	30	30	36	36	36	36
Weight	ca. kg	1.5	1.5	2.8	2.8	4.5	4.5	6.8	10.0
Kvs-Value	m^3/h	1.6	2.2	6.7	6.7	12.1	12.1	22.6	37.1
Cv-Value	gal/min	1.9	2.6	7.8	7.8	14.1	14.1	26.3	43.2

Dimensions in mm.

Edition 2022-11

Globe Valves

Type 01321 - Globe Valve

Cryogenic-Globe and Globe/Check Valves, PN50 (DN65=PN45, DN150=PN40)

Stainless steel body and bronze topwork
" live loaded " gland packing
" cleaned and degreased for oxygen service "
Part No. 01321.X.001* (H = 270mm)
Part No. 01321.X.002* (H = 370mm)
Part No. 01321.X.501* (H = 270mm) Globe/Check Valve
Part No. 01321.X.502* (H = 370mm) Globe/Check Valve
*Butt weld connection for stainless steel pipes acc. to ISO 1127 or ASTM A312
Part No. 01321.X.0014 (H = 270mm)
Part No. 01321.X.0024 (H = 370mm)
Part No. 01321.X.5014 (H = 270mm) Globe/Check Valve
Part No. 01321.X.5024 (H = 370mm) Globe/Check Valve
Socket weld connection for stainless steel pipes acc. to ISO 1127 or ASTM A312
Available options - on request only:
· Welded stainless steel stubs acc. to ISO 1127 or ASTM A312 - length FF + 200mm
· Extension H up to 900mm
· Valve with control disc (tapered design)
· Further pipe wall thicknesses

Applications:
Approved for air gases, vapours and cryogenic liquefied gases incl. LNG.
Working temperature: -196°C / -321°F (77K) up to +120°C / +248°F (393K)

Materials		DIN EN	ASTM
1	Body	1.4308	A 351 CF8
2	Valve seal up to DN50	PTFE / Carbon filled (25%)	
2a	Valve seal from DN65	PTFE	
3	Disc	CW614N	B 283 UNS C38500
4	Bonnet gasket	PTFE	
5	Headpiece	CC493K	B 505 UNS C93200
6	Bolts	1.4301/A2	A 194 B8
7	Elongation tube	1.4541	A 213 TP 321
8	Stem	1.4301	A 276 Grade 304
9	Gland packing	Graphite / PTFE	
10	Gland nut	CW614N	B 283 UNS C38500
11	Handwheel	Aluminium alloy	
12	Spring	CW452K	B 159 UNS C51900

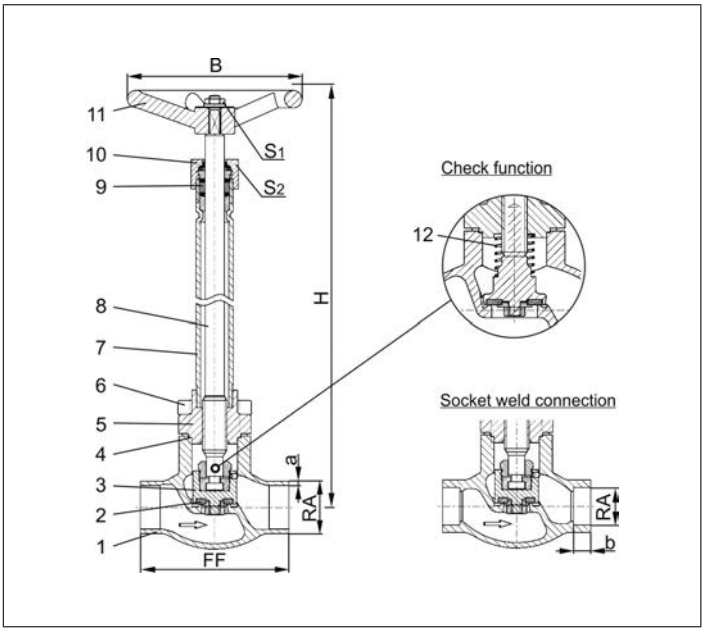

Type 01321 - Standard design	Technical data													
Nominal size	**DN**	**10**	**15**	**15**	**20**	**25**	**32**	**40**	**40**	**50**	**65**	**80**	**100**	**150**
Dimension code	.X.	1012	1517	1521	2026	2533	3238	4042	4048	5060	657x	8088	0114	0168
Face-to-face dimension	FF	70	85	85	100	115	115	130	130	155	205	245	280	400
Height	H	270mm or 370mm									320/370	320/370	370	420
Outside pipe-Ø ISO 1127	RA	12.0	17.2	21.3	26.9	33.7	38.0	42.4	48.3	60.3	76.1	88.9	114.3	168.3
Wall thickness pipe ISO 1127	a	1.0	1.6	2.0	2.0	2.0	2.0	2.0	2.0	2.0	2.9	3.2	6.0	7.1
Outside pipe-Ø ASTM A312	RA	13.72	17.15	21.34	26.67	33.40	-	42.16	48.26	60.32	73.02	88.90	114.30	168.27
Wall thickness pipe ASTM A312	a	dimensions acc. to S10 or S40												
Socket depth	b	6	10	10	13	13	-	13	13	16	16	16	20	20
Handwheel-Ø	B	100	100	100	100	100	125	125	125	125	200	250	315	360
Wrench size across flats	S_1	7	7	7	7	7	10	10	10	10	10	10	12	15
Wrench size across flats	S_2	30	30	30	30	30	36	36	36	36	36	36	41	41
Weight	ca. kg	1.4	1.65	1.7	2.1	2.4	3.3	4.7	4.7	5.7	12.7	17.0	24.5	54.0
Kvs-Value	m^3/h	1.6	3.8	4.3	6.7	11.5	14.0	20.6	22.6	37.1	71.1	104.0	170.0	350.0
Cv-Value	gal/min	1.9	4.4	5.0	7.8	13.4	16.2	23.9	26.3	43.2	82.9	121.3	198.3	408.4

Dimensions in mm. Compliance of tightness requirements acc. to EN 1626 for DN150 up to 20 bar differential pressure. In the range of >20-40 bar, 350-700ml per second (1 bar, 20°C [68°F]) are reached.

Globe Valves

Type 01325 - Globe Valve

Cryogenic-Globe and Globe/Check Valves, PN50

Stainless steel body and bronze topwork
" live loaded " gland packing
" cleaned and degreased for oxygen service "

Part No. 01325.X.0011 (H = 270mm)
Part No. 01325.X.0021 (H = 370mm)
Part No. 01325.X.5011 (H = 270mm) Globe/Check Valve
Part No. 01325.X.5021 (H = 370mm) Globe/Check Valve
Female thread connection (G) acc. to ISO 228/1

Part No. 01325.X.0016 (H = 270mm)
Part No. 01325.X.0026 (H = 370mm)
Part No. 01325.X.5016 (H = 270mm) Globe/Check Valve
Part No. 01325.X.5026 (H = 370mm) Globe/Check Valve
Female thread connection NPT acc. to ANSI B 1.20.1

Available options - on request only:
· Female thread connection (R) acc. to ISO 7-Rc
· Extension H up to 900mm
· Valve with control disc (tapered design)

Applications:
Approved for air gases, vapours and cryogenic liquefied gases incl. LNG.
Working temperature: -196°C / -321°F (77K) up to +120°C / +248°F (393K)

Materials		DIN EN	ASTM
1	Body	1.4308	A 351 CF8
2	Valve seal	PTFE / Carbon filled (25%)	
3	Disc	CW614N	B 283 UNS C38500
4	Bonnet gasket	PTFE	
5	Headpiece	CC493K	B 505 UNS C93200
6	Bolts	1.4301/A2	A 194 B8
7	Elongation tube	1.4541	A 213 TP 321
8	Stem	1.4301	A 276 Grade 304
9	Gland packing	Graphite / PTFE	
10	Gland nut	CW614N	B 283 UNS C38500
11	Handwheel	Aluminium alloy	
12	Spring	CW452K	B 159 UNS C51900

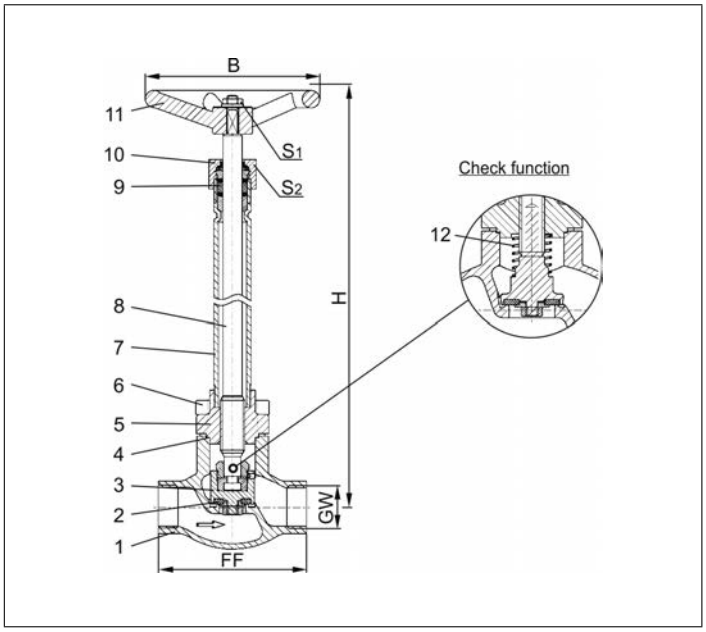

Type 01325 - Standard design	Technical data								
Nominal size	**DN**	**10**	**10**	**15**	**20**	**25**	**40**	**40**	**50**
Thread size	GW	1/4	3/8	1/2	3/4	1	1-1/4	1-1/2	2
Dimension code	.X.	0200	0300	0400	0600	1000	1200	1400	2000
Face-to-face dimension	FF	70	70	85	100	115	130	130	155
Height	H	270mm or 370mm							
Handwheel-Ø	B	100	100	100	100	100	125	125	125
Wrench size across flats	S_1	7	7	7	7	7	10	10	10
Wrench size across flats	S_2	30	30	30	30	30	36	36	36
Weight	ca. kg	1.4	1.4	1.7	2.1	2.4	4.7	4.7	7.2
Kvs-Value	m^3/h	1.6	2.2	4.3	6.7	11.5	20.6	22.6	37.1
Cv-Value	gal/min	1.9	2.6	5.0	7.8	13.4	23.9	26.3	43.2

Dimensions in mm.

Edition 2022-11

Globe Valves

Type 03321 - Globe Valve, DIN EN Flanges

Cryogenic-Globe and Globe/Check Valves, PN16

Stainless steel body and bronze topwork,
" live loaded " gland packing
" cleaned and degreased for oxygen service "

Part No. 03321.X.0014 (H = 270mm)
Part No. 03321.X.0024 (H = 370mm)
Part No. 03321.X.5014 (H = 270mm) Globe/Check Valve
Part No. 03321.X.5024 (H = 370mm) Globe/Check Valve
Flanged connection acc. to DIN EN 1092-1 PN16

Available options - on request only:
· Extension H up to 900mm
· Valve with control disc (tapered design)

Applications:
Approved for air gases, vapours and cryogenic liquefied gases incl. LNG.
Working temperature: -196°C / -321°F (77K) up to +120°C / +248°F (393K)

Materials		DIN EN	ASTM
1	Body	1.4308	A 351 CF8
2	Valve seal up to DN50	PTFE / Carbon filled (25%)	
2a	Valve seal from DN65	PTFE	
3	Disc	CW614N	B 283 UNS C38500
4	Bonnet gasket	PTFE	
5	Headpiece	CC493K	B 505 UNS C93200
6	Bolts	1.4301/A2	A 194 B8
7	Elongation tube	1.4541	A 213 TP 321
8	Stem	1.4301	A 276 Grade 304
9	Gland packing	Graphite / PTFE	
10	Gland nut	CW614N	B 283 UNS C38500
11	Handwheel	Aluminium alloy	
12	Spring	CW452K	B 159 UNS C51900

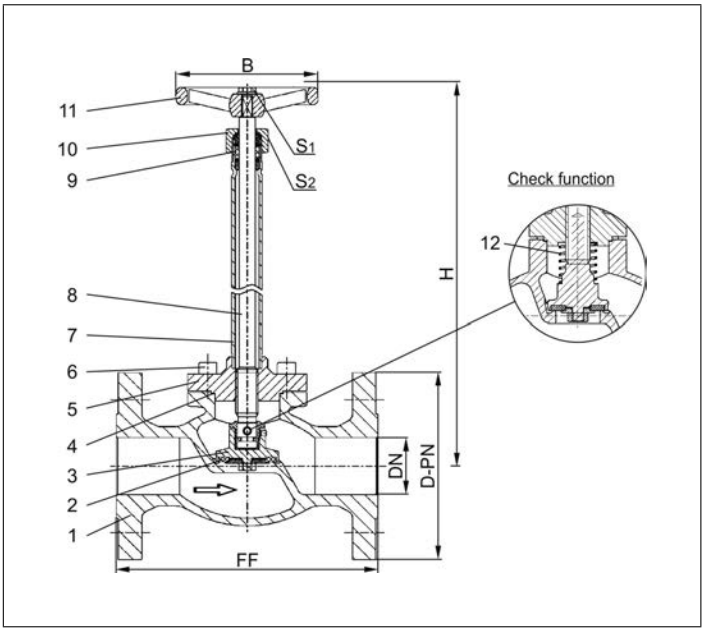

Type 03321 - Standard design	Technical data									
Nominal size	**DN**	**15**	**20**	**25**	**40**	**50**	**65**	**80**	**100**	**150**
Dimension code - Flange EN 1092-1 PN16	.X.	0150	0200	0250	0400	0500	0650	0800	1000	1500
Flange-Ø	D-PN	95	105	115	150	165	185	200	220	285
Face-to-face dimension	FF	140	150	160	200	230	295	310	350	510
Height	H	270 mm or 370 mm							370	420
Handwheel-Ø	B	100	100	100	125	125	200	250	315	360
Wrench size across flats	S_1	7	7	7	10	10	10	10	12	15
Wrench size across flats	S_2	30	30	30	36	36	36	36	41	41
Weight	ca. kg	3.0	3.5	5.0	9.0	13.0	21.0	28.0	42.0	83.0
Kvs-Value	m^3/h	4.3	6.7	11.5	22.6	37.1	71.1	104.0	170.0	350.0
Cv-Value	gal/min	5.0	7.8	13.4	26.3	43.2	82.9	121.3	198.3	408.4

Dimensions in mm. Compliance of tightness requirements acc. to EN 1626 for DN150 up to 20 bar differential pressure. In the range of >20-40 bar, 350-700ml per second (1 bar, 20°C [68°F]) are reached.

Globe Valves

Type 03321 - Globe Valve, DIN EN Flanges

Cryogenic-Globe and Globe/Check Valves, PN40

Stainless steel body and bronze topwork,
" live loaded " gland packing
" cleaned and degreased for oxygen service "

Part No. 03321.X.0012 (H = 270mm)
Part No. 03321.X.0022 (H = 370mm)
Part No. 03321.X.5012 (H = 270mm) Globe/Check Valve
Part No. 03321.X.5022 (H = 370mm) Globe/Check Valve
Flanged connection acc. to DIN EN 1092-1 PN40

Available options - on request only:
· Extension H up to 900mm
· Valve with control disc (tapered design)

Applications:
Approved for air gases, vapours and cryogenic liquefied gases incl. LNG.
Working temperature: -196°C / -321°F (77K) up to +120°C / +248°F (393K)

Materials		DIN EN	ASTM
1	Body	1.4308	A 351 CF8
2	Valve seal up to DN50	PTFE / Carbon filled (25%)	
2a	Valve seal from DN65	PTFE	
3	Disc	CW614N	B 283 UNS C38500
4	Bonnet gasket	PTFE	
5	Headpiece	CC493K	B 505 UNS C93200
6	Bolts	1.4301/A2	A 194 B8
7	Elongation tube	1.4541	A 213 TP 321
8	Stem	1.4301	A 276 Grade 304
9	Gland packing	Graphite / PTFE	
10	Gland nut	CW614N	B 283 UNS C38500
11	Handwheel	Aluminium alloy	
12	Spring	CW452K	B 159 UNS C51900

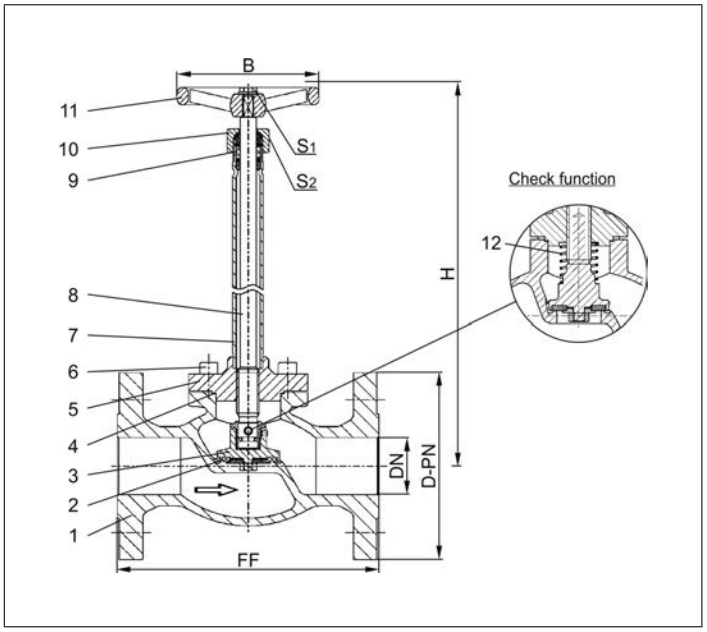

Type 03321 - Standard design	Technical data									
Nominal size	**DN**	**15**	**20**	**25**	**40**	**50**	**65**	**80**	**100**	**150**
Dimension code - Flange EN 1092-1 PN40	.X.	0150	0200	0250	0400	0500	0650	0800	1000	1500
Flange-Ø	D-PN	95	105	115	150	165	185	200	235	300
Face-to-face dimension	FF	140	150	160	200	230	290	310	350	550
Height	H	270 mm or 370 mm							370	420
Handwheel-Ø	B	100	100	100	125	125	200	250	315	360
Wrench size across flats	S_1	7	7	7	10	10	10	10	12	15
Wrench size across flats	S_2	30	30	30	36	36	36	36	41	41
Weight	ca. kg	3.0	3.5	5.0	9.0	13.0	21.0	28.0	42.0	83.0
Kvs-Value	m^3/h	4.3	6.7	11.5	22.6	37.1	71.1	104.0	170.0	350.0
Cv-Value	gal/min	5.0	7.8	13.4	26.3	43.2	82.9	121.3	198.3	408.4

Dimensions in mm. Compliance of tightness requirements acc. to EN 1626 for DN150 up to 20 bar differential pressure. In the range of >20-40 bar, 350-700ml per second (1 bar, 20°C [68°F]) are reached.

Edition 2022-11

Globe Valves

Type 03321 - Globe Valve, ANSI Flanges

Cryogenic-Globe and Globe/Check Valves, class 300

Stainless steel body and bronze topwork,
" live loaded " gland packing
" cleaned and degreased for oxygen service "

Part No. 03321.X.0013 (H = 270mm)
Part No. 03321.X.0023 (H = 370mm)
Part No. 03321.X.5013 (H = 270mm) Globe/Check Valve
Part No. 03321.X.5023 (H = 370mm) Globe/Check Valve
Flanged connection acc. to ANSI B16.5 class 300

Available options - on request only:
· Extension H up to 900mm
· Valve with control disc (tapered design)

Applications:
Approved for air gases, vapours and cryogenic liquefied gases incl. LNG.
Working temperature: -196°C / -321°F (77K) up to +120°C / +248°F (393K)

Materials		DIN EN	ASTM
1	Body	1.4308	A 351 CF8
2	Valve seal up to DN50	PTFE / Carbon filled (25%)	
2a	Valve seal from DN65	PTFE	
3	Disc	CW614N	B 283 UNS C38500
4	Bonnet gasket	PTFE	
5	Headpiece	CC493K	B 505 UNS C93200
6	Bolts	1.4301/A2	A 194 B8
7	Elongation tube	1.4541	A 213 TP 321
8	Stem	1.4301	A 276 Grade 304
9	Gland packing	Graphite / PTFE	
10	Gland nut	CW614N	B 283 UNS C38500
11	Handwheel	Aluminium alloy	
12	Spring	CW452K	B 159 UNS C51900

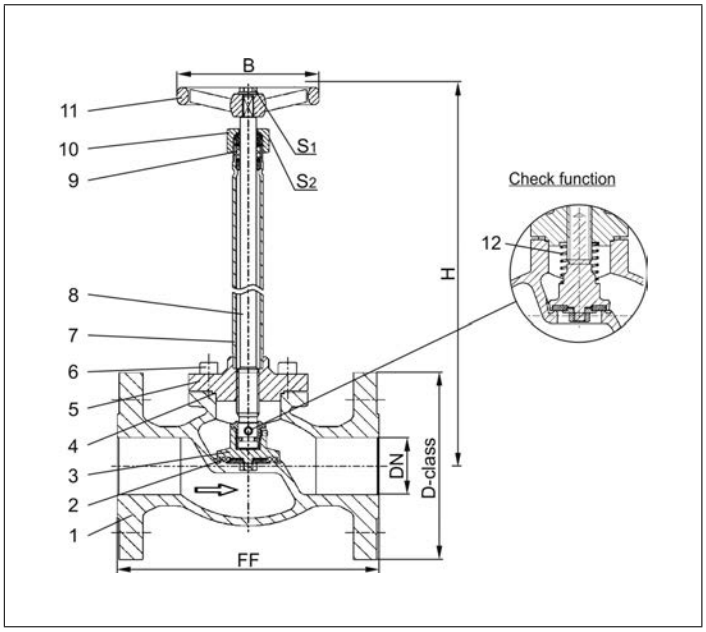

Type 03321 - Standard design	Technical data									
Nominal size	**DN**	**15**	**20**	**25**	**40**	**50**	**65**	**80**	**100**	**150**
Dimension code - Flange ANSI B16.5 class 300	.X.	0400	0600	1000	1400	2000	2400	3000	4000	6000
Flange-Ø	D-class	95	115	125	155	165	190	210	255	320
Face-to-face dimension	FF	140	150	160	200	230	290	310	350	597
Height	H	270 mm or 370 mm							370	420
Handwheel-Ø	B	100	100	100	125	125	200	250	315	360
Wrench size across flats	S_1	7	7	7	10	10	10	10	12	15
Wrench size across flats	S_2	30	30	30	36	36	36	36	41	41
Weight	ca. kg	3.0	3.5	5.0	9.0	13.0	21.0	28.0	42.0	83.0
Kvs-Value	m^3/h	4.3	6.7	11.5	22.6	37.1	71.1	104.0	170.0	350.0
Cv-Value	gal/min	5.0	7.8	13.4	26.3	43.2	82.9	121.3	198.3	408.4

Dimensions in mm. Compliance of tightness requirements acc. to EN 1626 for DN150 up to 20 bar differential pressure. In the range of >20-40 bar, 350-700ml per second (1 bar, 20°C [68°F]) are reached.

Globe Valves

Type 03321 - Globe Valve, ANSI Flanges

Cryogenic-Globe and Globe/Check Valves, class 150

Stainless steel body and bronze topwork,
" live loaded " gland packing
" cleaned and degreased for oxygen service "

Part No. 03321.X.0011 (H = 270mm)
Part No. 03321.X.0021 (H = 370mm)
Part No. 03321.X.5011 (H = 270mm) Globe/Check Valve
Part No. 03321.X.5021 (H = 370mm) Globe/Check Valve
Flanged connection acc. to ANSI B16.5 class 150

Available options - on request only:
· Extension H up to 900mm
· Valve with control disc (tapered design)

Applications:
Approved for air gases, vapours and cryogenic liquefied gases incl. LNG.
Working temperature: -196°C / -321°F (77K) up to +120°C / +248°F (393K)

Materials		DIN EN	ASTM
1	Body	1.4308	A 351 CF8
2	Valve seal up to DN50	PTFE / Carbon filled (25%)	
2a	Valve seal from DN65	PTFE	
3	Disc	CW614N	B 283 UNS C38500
4	Bonnet gasket	PTFE	
5	Headpiece	CC493K	B 505 UNS C93200
6	Bolts	1.4301/A2	A 194 B8
7	Elongation tube	1.4541	A 213 TP 321
8	Stem	1.4301	A 276 Grade 304
9	Gland packing	Graphite / PTFE	
10	Gland nut	CW614N	B 283 UNS C38500
11	Handwheel	Aluminium alloy	
12	Spring	CW452K	B 159 UNS C51900

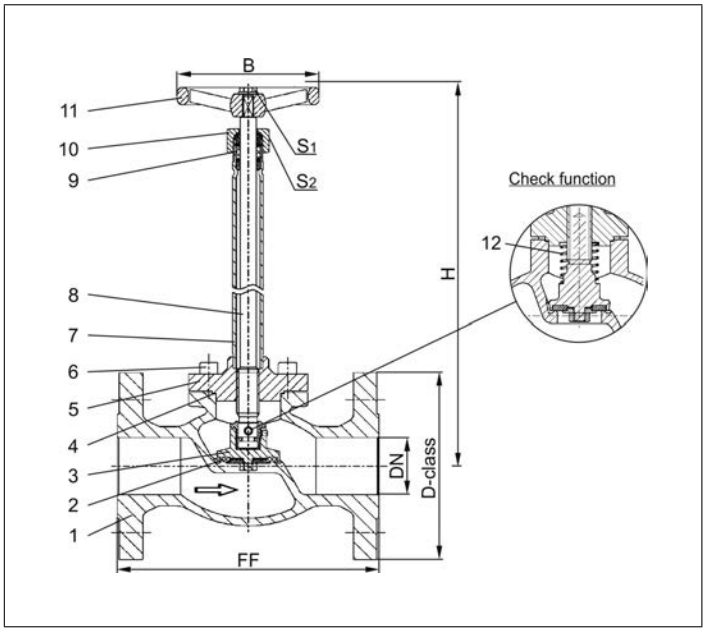

Type 03321 - Standard design	Technical data									
Nominal size	**DN**	**15**	**20**	**25**	**40**	**50**	**65**	**80**	**100**	**150**
Dimension code - Flange ANSI B16.5 class 150	.X.	0400	0600	1000	1400	2000	2400	3000	4000	6000
Flange-Ø	D-class	90	100	110	125	150	180	190	230	280
Face-to-face dimension	FF	140	150	160	200	230	290	310	350	577
Height	H	270 mm or 370 mm							370	420
Handwheel-Ø	B	100	100	100	125	125	200	250	315	360
Wrench size across flats	S_1	7	7	7	10	10	10	10	12	15
Wrench size across flats	S_2	30	30	30	36	36	36	36	41	41
Weight	ca. kg	3.0	3.5	5.0	9.0	13.0	21.0	28.0	42.0	83.0
Kvs-Value	m^3/h	4.3	6.7	11.5	22.6	37.1	71.1	104.0	170.0	350.0
Cv-Value	gal/min	5.0	7.8	13.4	26.3	43.2	82.9	121.3	198.3	408.4

Dimensions in mm. Compliance of tightness requirements acc. to EN 1626 for DN150 up to 20 bar differential pressure. In the range of >20-40 bar, 350-700ml per second (1 bar, 20°C [68°F]) are reached.

Edition 2022-11

Globe Valves

Type 01341 - Globe Valve

Cryogenic-Globe and Globe/Check Valves, PN50 (DN65=PN45, DN150=PN40)

Stainless steel body and topwork,
" live loaded " gland packing
" cleaned and degreased for oxygen service "
Part No. 01341.X.001* (H = 270mm)
Part No. 01341.X.002* (H = 370mm)
Part No. 01341.X.501* (H = 270mm) Globe/Check Valve
Part No. 01341.X.502* (H = 370mm) Globe/Check Valve
*Butt weld connection for stainless steel pipes acc. to ISO 1127 or ASTM A312
Part No. 01341.X.0014 (H = 270mm)
Part No. 01341.X.0024 (H = 370mm)
Part No. 01341.X.5014 (H = 270mm) Globe/Check Valve
Part No. 01341.X.5024 (H = 370mm) Globe/Check Valve
Socket weld connection for stainless steel pipes acc. to ISO 1127 or ASTM A312
Available options - on request only:
· Welded stainless steel stubs acc. to ISO 1127 or ASTM A312 - length FF + 200mm
· Extension H up to 900mm
· Valve with control disc (tapered design)
· Further pipe wall thicknesses

Applications:
Approved for air gases, vapours and cryogenic liquefied gases incl. LNG.
Working temperature: -196°C / -321°F (77K) up to +120°C / +248°F (393K)

Materials		DIN EN	ASTM
1	Body	1.4308	A 351 CF8
2	Valve seal up to DN50	PTFE / Carbon filled (25%)	
2a	Valve seal from DN65	PTFE	
3	Disc	1.4301	A 276 Grade 304
4	Bonnet gasket	PTFE	
5	Headpiece	1.4301 / 1.4308	A 276 Grade 304 / A 351 CF8
6	Bolts	1.4301/A2	A 194 B8
7	Elongation tube	1.4541	A 213 TP 321
8	Stem	1.4301	A 276 Grade 304
9	Gland packing	Graphite / PTFE / MICA	
10	Gland nut	1.4305	A 276 Grade 303
11	Handwheel	Aluminium alloy	
12	Spring	1.4310	A 313 Grade 301
13	Bush	CW452K	B 159 UNS C51900

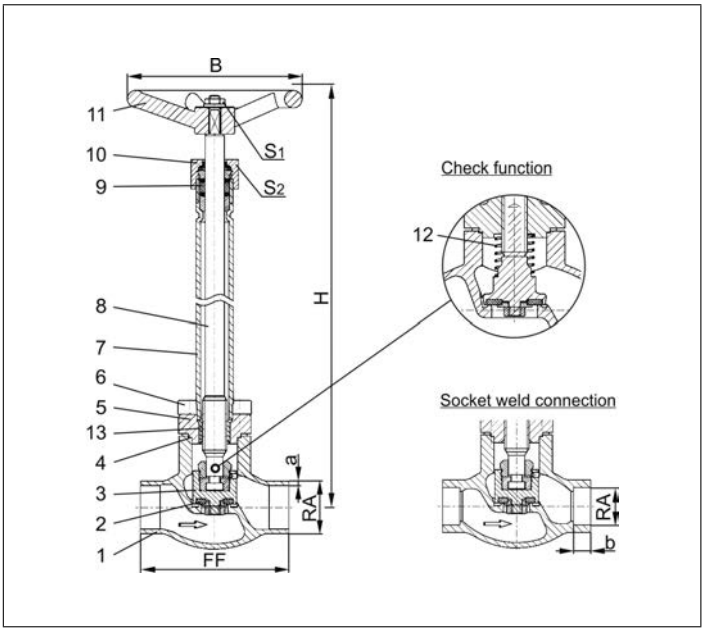

ASSOCIATION OF AMERICAN RAILROADS

Type 01341 - Standard design	Technical data													
Nominal size	**DN**	**10**	**15**	**15**	**20**	**25**	**32**	**40**	**40**	**50**	**65**	**80**	**100**	**150**
Dimension code	.X.	1012	1517	1521	2026	2533	3238	4042	4048	5060	657x	8088	0114	0168
Face-to-face dimension	FF	70	85	85	100	115	115	130	130	155	205	245	280	400
Height	H	270mm or 370mm									300/370	320/370	370	420
Outside pipe-Ø ISO 1127	RA	12.0	17.2	21.3	26.9	33.7	38.0	42.4	48.3	60.3	76.1	88.9	114.3	168.3
Wall thickness pipe ISO 1127	a	1.0	1.6	2.0	2.0	2.0	2.0	2.0	2.0	2.0	2.9	3.2	6.0	7.1
Outside pipe-Ø ASTM A312	RA	13.72	17.15	21.34	26.67	33.40	-	42.16	48.26	60.33	73.03	88.90	114.3	168.3
Wall thickness pipe ASTM A312	a	dimensions acc. to S10 or S40												
Socket depth	b	6	10	10	13	13	-	13	13	16	16	16	20	20
Handwheel-Ø	B	100	100	100	100	100	125	125	125	125	200	250	315	360
Wrench size across flats	S_1	7	7	7	7	7	10	10	10	10	10	10	12	15
Wrench size across flats	S_2	30	30	30	30	30	36	36	36	36	36	36	41	41
Weight	ca. kg	1.4	1.65	1.7	2.1	2.4	3.3	4.7	4.7	7.2	12.7	17.0	24.5	54.0
Kvs-Value	m^3/h	1.6	3.8	4.3	6.7	11.5	14.0	20.6	22.6	37.1	71.1	104.0	170.0	350.0
Cv-Value	gal/min	1.9	4.4	5.0	7.8	13.4	16.2	23.9	26.3	43.2	82.9	121.3	198.3	408.4

Dimensions in mm. Compliance of tightness requirements acc. to EN 1626 for DN150 up to 20 bar differential pressure. In the range of >20-40 bar, 350-700ml per second (1 bar, 20°C [68°F]) are reached.

Globe Valves

Type 01341 - Globe Valve

Cryogenic Globe Valves

Stainless steel body and topwork
" live loaded " gland packing

Part No. 01341.0219.001* (H=560), PN20/25

Part No. 01341.0219.006* (H=1000), PN20/25
*Butt weld connection for stainless steel pipes acc. to ISO 1127 or ASTM A312

Part No. 01341.0219.00*4, PN25
Socket weld connection for stainless steel pipes acc. to ISO 1127 or ASTM A312

In flow direction, the valve with the nominal size DN200 is conform to tightness class L1 up to 12 bar maximum differential pressure acc. to DIN 12567 for LNG use.
This standard can also be used for the tightness class of other cryogenic gases.

Available options - on request only

Applications:
Approved for air gases, vapours and cryogenic liquefied gases incl. LNG.
Working temperature: -196°C / -321°F (77K) up to +120°C / +248°F (393K)

Materials		DIN EN	ASTM
1	Body	1.4308	A 351 CF8
2	Valve seal	PTFE	
3	Disc	1.4301	A 276 Grade 304
4	Bonnet gasket	PTFE	
5	Headpiece	1.4301	A 276 Grade 304
6	Bolts	1.4301/A2	A 194 B8
7	Elongation tube	1.4541	A 213 TP 321
8	Stem	1.4301	A 276 Grade 304
9	Gland packing	Graphite / PTFE / MICA	
10	Gland nut	1.4305	A 276 Grade 303
11	Handwheel	1.4571	A 313 Grade 316Ti
13	Bush	CW452K	B 159 UNS C51900

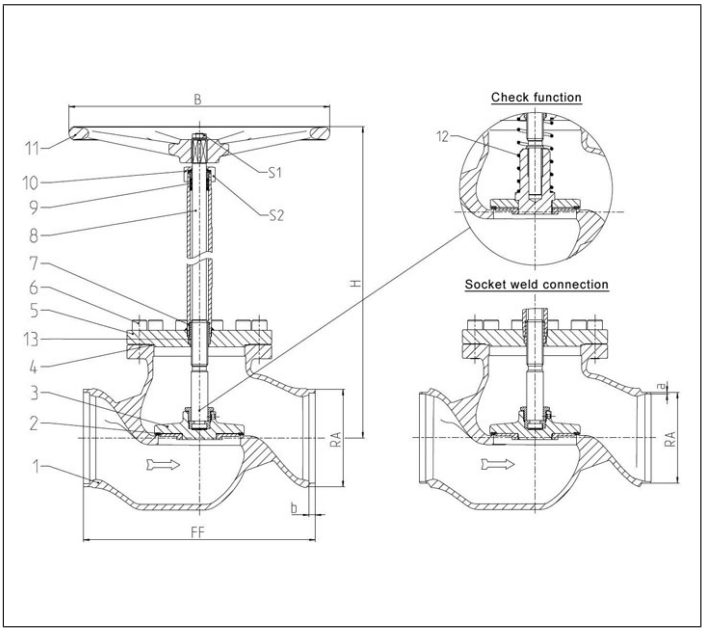

Type 01341 - Standard design	Technical data	
Nominal size	**DN**	**200**
Dimension code	.X.	0219
Face-to-face dimension	FF	560
Height	H	560
Outside pipe-Ø ISO 1127	RA	219.1
Wall thickness pipe ISO 1127	a	6.3
Outside pipe-Ø ASTM A312	RA	219.1
Wall thickness pipe ASTM A312	a	dimensions acc. to S10 or S40
Socket depth	b	15
Handwheel-Ø	B	630
Wrench size across flats	S_1	30
Wrench size across flats	S_2	65
Weight	ca. kg	135
Kvs-Value	m^3/h	680
Cv-Value	gal/min	793

Dimensions in mm.

Edition 2022-11

Globe Valves

Type 01345 - Globe Valve

Cryogenic-Globe and Globe/Check Valves, PN50

Stainless steel body and topwork,
" live loaded " gland packing
" cleaned and degreased for oxygen service "

Part No. 01345.X.0011 (H = 270mm)
Part No. 01345.X.0021 (H = 370mm)
Part No. 01345.X.5011 (H = 270mm) Globe/Check Valve
Part No. 01345.X.5021 (H = 370mm) Globe/Check Valve
Female thread connection (G) acc. to ISO 228/1
Part No. 01345.X.0016 (H = 270mm)
Part No. 01345.X.0026 (H = 370mm)
Part No. 01345.X.5016 (H = 270mm) Globe/Check Valve
Part No. 01345.X.5026 (H = 370mm) Globe/Check Valve
Female thread connection NPT acc. to ANSI B 1.20.1

Available options - on request only:
· Female thread connection (R) acc. to ISO 7-Rc
· Extension H up to 900mm
· Valve with control disc (tapered design)

Applications:
Approved for air gases, vapours and cryogenic liquefied gases incl. LNG.
Working temperature: -196°C / -321°F (77K) up to +120°C / +248°F (393K)

Materials		DIN EN	ASTM
1	Body	1.4308	A 351 CF8
2	Valve seal	PTFE / Carbon filled (25%)	
3	Disc	1.4301	A 276 Grade 304
4	Bonnet gasket	PTFE	
5	Headpiece	1.4301 / 1.4308	A 276 Grade 304 / A 351 CF8
6	Bolts	1.4301/A2	A 194 B8
7	Elongation tube	1.4541	A 213 TP 321
8	Stem	1.4301	A 276 Grade 304
9	Gland packing	Graphite / PTFE / MICA	
10	Gland nut	1.4305	A 276 Grade 303
11	Handwheel	Aluminium alloy	
12	Spring	1.4310	A 313 Grade 301
13	Bush	CW452K	B 159 UNS C51900

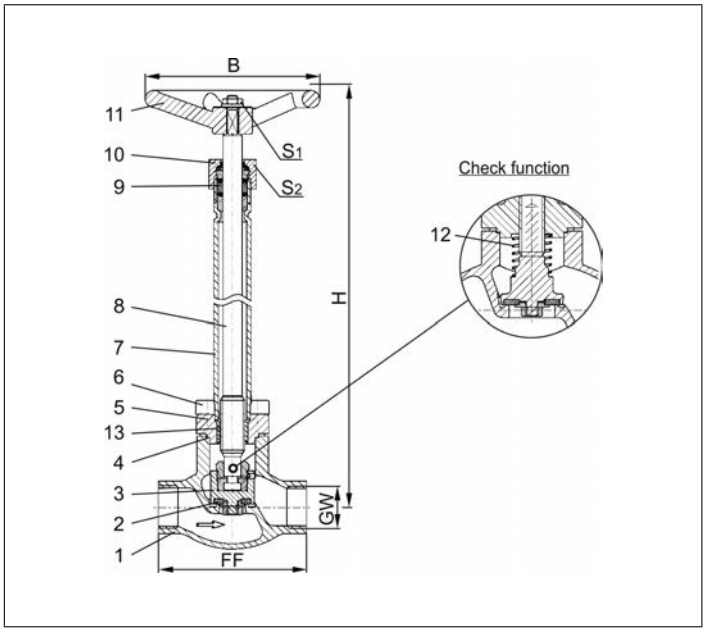

Type 01345 - Standard design	Technical data								
Nominal size	**DN**	**10**	**10**	**15**	**20**	**25**	**40**	**40**	**50**
Thread size	GW	1/4	3/8	1/2	3/4	1	1-1/4	1-1/2	2
Dimension code	.X.	0200	0300	0400	0600	1000	1200	1400	2000
Face-to-face dimension	FF	70	70	85	100	115	130	130	155
Height	H	270mm or 370mm							
Handwheel-Ø	B	100	100	100	100	100	125	125	125
Wrench size across flats	S_1	7	7	7	7	7	10	10	10
Wrench size across flats	S_2	30	30	30	30	30	36	36	36
Weight	ca. kg	1.4	1.4	1.7	2.1	2.4	4.7	4.7	7.2
Kvs-Value	m^3/h	1.6	2.2	4.3	6.7	11.5	20.6	22.6	37.1
Cv-Value	gal/min	1.9	2.6	5.0	7.8	13.4	23.9	26.3	43.2

Dimensions in mm.

Globe Valves

Type 03341 - Globe Valve, DIN EN Flanges

Cryogenic-Globe and Globe/Check Valves, PN40

Stainless steel body and topwork,
" live loaded " gland packing
" cleaned and degreased for oxygen service "

Part No. 03341.X.0012 (H = 270mm)
Part No. 03341.X.0022 (H = 370mm)
Part No. 03341.X.5012 (H = 270mm) Globe/Check Valve
Part No. 03341.X.5022 (H = 370mm) Globe/Check Valve
Flanged connection acc. to DIN EN 1092-1 PN40

Available options - on request only:
· Extension H up to 900mm
· Valve with control disc (tapered design)

Applications:
Approved for air gases, vapours and cryogenic liquefied gases incl. LNG.
Working temperature: -196°C / -321°F (77K) up to +120°C / +248°F (393K)

Materials		DIN EN	ASTM
1	Body	1.4308	A 351 CF8
2	Valve seal up to DN50	PTFE / Carbon filled (25%)	
2a	Valve seal from DN65	PTFE	
3	Disc	1.4301	A 276 Grade 304
4	Bonnet gasket	PTFE	
5	Headpiece	1.4301 / 1.4308	A 276 Grade 304 / A 351 CF8
6	Bolts	1.4301/A2	A 194 B8
7	Elongation tube	1.4541	A 213 TP 321
8	Stem	1.4301	A 276 Grade 304
9	Gland packing	Graphite / PTFE / MICA	
10	Gland nut	1.4305	A 276 Grade 303
11	Handwheel	Aluminium alloy	
12	Spring	1.4310	A 313 Grade 301
13	Bush	CW452K	B 159 UNS C51900

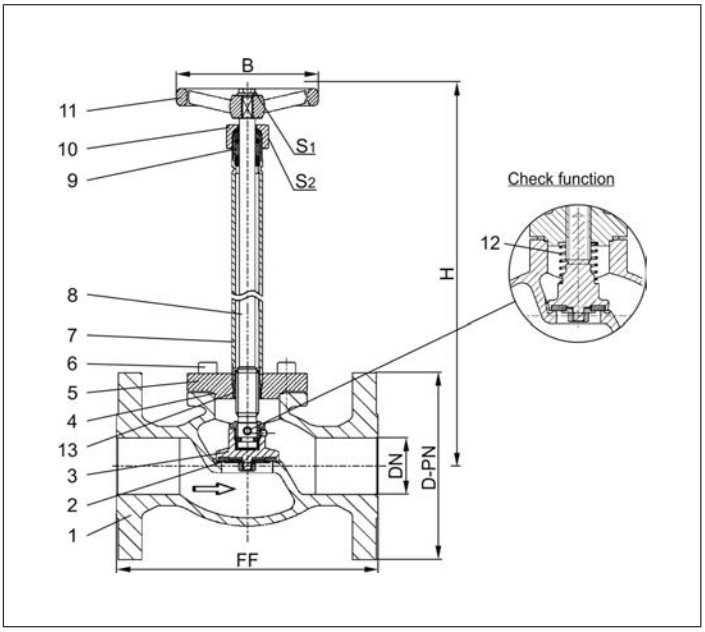

Type 03341 - Standard design	Technical data									
Nominal size	**DN**	**15**	**20**	**25**	**40**	**50**	**65**	**80**	**100**	**150**
Dimension code - Flange EN 1092-1 PN40	.X.	0150	0200	0250	0400	0500	0650	0800	1000	1500
Flange-Ø	D-PN	95	105	115	150	165	185	200	235	300
Face-to-face dimension	FF	140	150	160	200	230	290	310	350	550
Height	H	270 mm or 370 mm							370	420
Handwheel-Ø	B	100	100	100	125	125	200	250	315	360
Wrench size across flats	S_1	7	7	7	10	10	10	10	12	15
Wrench size across flats	S_2	30	30	30	36	36	36	36	41	41
Weight	ca. kg	3.0	3.5	5.0	9.0	13.0	21.0	28.0	42.0	83.0
Kvs-Value	m^3/h	4.3	6.7	11.5	22.6	37.1	71.1	104.0	170.0	350.0
Cv-Value	gal/min	5.0	7.8	13.4	26.3	43.2	82.9	121.3	198.3	408.4

Dimensions in mm. Compliance of tightness requirements acc. to EN 1626 for DN150 up to 20 bar differential pressure. In the range of >20-40 bar, 350-700ml per second (1 bar, 20°C [68°F]) are reached.

Edition 2022-11

Globe Valves

Type 03341 - Globe Valve, ANSI Flanges

Cryogenic-Globe and Globe/Check Valves, class 300

Stainless steel body and topwork,
" live loaded " gland packing
" cleaned and degreased for oxygen service "

Part No. 03341.X.0013 (H = 270mm)
Part No. 03341.X.0023 (H = 370mm)
Part No. 03341.X.5013 (H = 270mm) Globe/Check Valve
Part No. 03341.X.5023 (H = 370mm) Globe/Check Valve
Flanged connection acc. to ANSI B16.5 class 300

Available options - on request only:
· Extension H up to 900mm
· Valve with control disc (tapered design)

Applications:
Approved for air gases, vapours and cryogenic liquefied gases incl. LNG.
Working temperature: -196°C / -321°F (77K) up to +120°C / +248°F (393K)

Materials		DIN EN	ASTM
1	Body	1.4308	A 351 CF8
2	Valve seal up to DN50	PTFE / Carbon filled (25%)	
2a	Valve seal from DN65	PTFE	
3	Disc	1.4301	A 276 Grade 304
4	Bonnet gasket	PTFE	
5	Headpiece	1.4301 / 1.4308	A 276 Grade 304 / A 351 CF8
6	Bolts	1.4301/A2	A 194 B8
7	Elongation tube	1.4541	A 213 TP 321
8	Stem	1.4301	A 276 Grade 304
9	Gland packing	Graphite / PTFE / MICA	
10	Gland nut	1.4305	A 276 Grade 303
11	Handwheel	Aluminium alloy	
12	Spring	1.4310	A 313 Grade 301
13	Bush	CW452K	B 159 UNS C51900

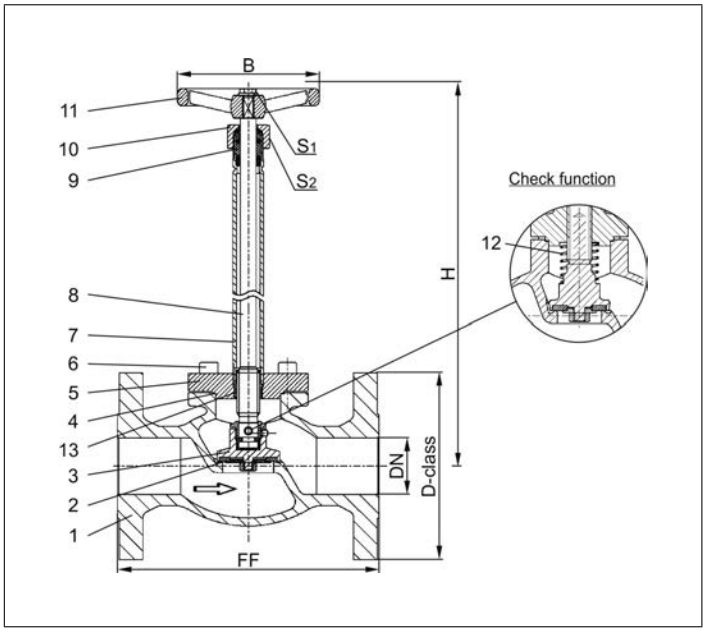

Type 03341 - Standard design	Technical data									
Nominal size	**DN**	**15**	**20**	**25**	**40**	**50**	**65**	**80**	**100**	**150**
Dimension code - Flange ANSI B16.5 class 300	.X.	0400	0600	1000	1400	2000	2400	3000	4000	6000
Flange-Ø	D-class	95	115	125	155	165	190	210	255	320
Face-to-face dimension	FF	140	150	160	200	230	290	310	350	597
Height	H	270 mm or 370 mm							370	420
Handwheel-Ø	B	100	100	100	125	125	200	250	315	360
Wrench size across flats	S_1	7	7	7	10	10	10	10	12	15
Wrench size across flats	S_2	30	30	30	36	36	36	36	41	41
Weight	ca. kg	3.0	3.5	5.0	9.0	13.0	21.0	28.0	42.0	83.0
Kvs-Value	m^3/h	4.3	6.7	11.5	22.6	37.1	71.1	104.0	170.0	350.0
Cv-Value	gal/min	5.0	7.8	13.4	26.3	43.2	82.9	121.3	198.3	408.4

Dimensions in mm. Compliance of tightness requirements acc. to EN 1626 for DN150 up to 20 bar differential pressure. In the range of >20-40 bar, 350-700ml per second (1 bar, 20°C [68°F]) are reached.

Globe Valves

Type 03341 - Globe Valve, ANSI Flanges

Cryogenic-Globe and Globe/Check Valves, class 150

Stainless steel body and topwork,
" live loaded " gland packing
" cleaned and degreased for oxygen service "

Part No. 03341.X.0011 (H = 270mm)
Part No. 03341.X.0021 (H = 370mm)
Part No. 03341.X.5011 (H = 270mm) Globe/Check Valve
Part No. 03341.X.5021 (H = 370mm) Globe/Check Valve
Flanged connection acc. to ANSI B16.5 class 150

Available options - on request only:
· Extension H up to 900mm
· Valve with control disc (tapered design)

Applications:
Approved for air gases, vapours and cryogenic liquefied gases incl. LNG.
Working temperature: -196°C / -321°F (77K) up to +120°C / +248°F (393K)

Materials		DIN EN	ASTM
1	Body	1.4308	A 351 CF8
2	Valve seal up to DN50	PTFE / Carbon filled (25%)	
2a	Valve seal from DN65	PTFE	
3	Disc	1.4301	A 276 Grade 304
4	Bonnet gasket	PTFE	
5	Headpiece	1.4301 / 1.4308	A 276 Grade 304 / A 351 CF8
6	Bolts	1.4301/A2	A 194 B8
7	Elongation tube	1.4541	A 213 TP 321
8	Stem	1.4301	A 276 Grade 304
9	Gland packing	Graphite / PTFE / MICA	
10	Gland nut	1.4305	A 276 Grade 303
11	Handwheel	Aluminium alloy	
12	Spring	1.4310	A 313 Grade 301
13	Bush	CW452K	B 159 UNS C51900

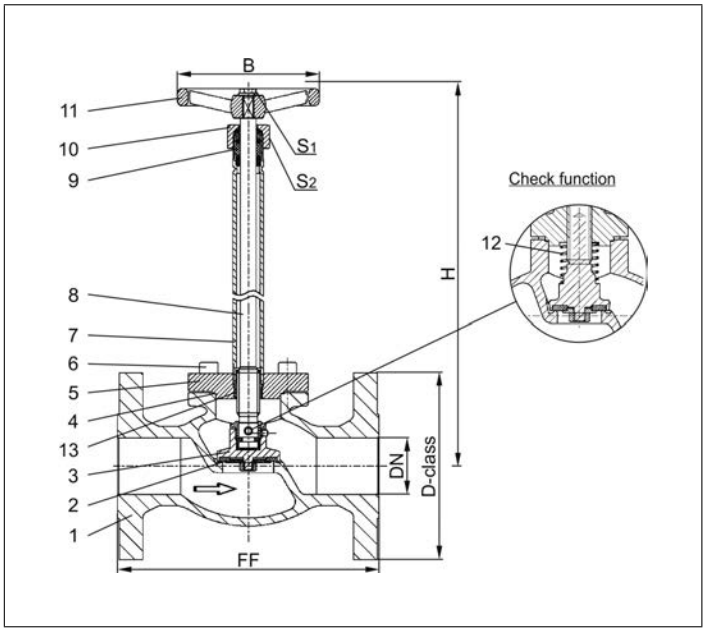

Type 03341 - Standard design	Technical data									
Nominal size	**DN**	**15**	**20**	**25**	**40**	**50**	**65**	**80**	**100**	**150**
Dimension code - Flange ANSI B16.5 class 150	.X.	0400	0600	1000	1400	2000	2400	3000	4000	6000
Flange-Ø	D-class	90	100	110	125	150	180	190	230	280
Face-to-face dimension	FF	140	150	160	200	230	290	310	350	577
Height	H	270 mm or 370 mm							370	420
Handwheel-Ø	B	100	100	100	125	125	200	250	315	360
Wrench size across flats	S_1	7	7	7	10	10	10	10	12	15
Wrench size across flats	S_2	30	30	30	36	36	36	36	41	41
Weight	ca. kg	3.0	3.5	5.0	9.0	13.0	21.0	28.0	42.0	83.0
Kvs-Value	m^3/h	4.3	6.7	11.5	22.6	37.1	71.1	104.0	170.0	350.0
Cv-Value	gal/min	5.0	7.8	13.4	26.3	43.2	82.9	121.3	198.3	408.4

Dimensions in mm. Compliance of tightness requirements acc. to EN 1626 for DN150 up to 20 bar differential pressure. In the range of >20-40 bar, 350-700ml per second (1 bar, 20°C [68°F]) are reached.

Edition 2022-11

Globe Valves

Type 03341 - Globe Valve, ANSI Flanges

Cryogenic Globe Valves, class 150

Stainless steel body and topwork,
" live loaded " gland packing

Part No. 03341.8000.0011 (H=560)
Flanged connection acc. to ANSI B16.5 class 150

In flow direction, the valve with the nominal size DN200 is conform to tightness class L1 up to 12 bar maximum differential pressure acc. to DIN 12567 for LNG use.
This standard can also be used for the tightness class of other cryogenic gases.

Available options - on request only

Applications:
Approved for air gases, vapours and cryogenic liquefied gases incl. LNG.
Working temperature: -196°C / -321°F (77K) up to +120°C / +248°F (393K)

Materials		DIN EN	ASTM
1	Body	1.4308	A 351 CF8
1a	Flange	1.4301	A 276 Grade 304
2	Valve seal	PTFE	
3	Disc	1.4301	A 276 Grade 304
4	Bonnet gasket	PTFE	
5	Headpiece	1.4301	A 276 Grade 304
6	Bolts	1.4301/A2	A 194 B8
7	Elongation tube	1.4541	A 213 TP 321
8	Stem	1.4301	A 276 Grade 304
9	Gland packing	Graphite / PTFE / MICA	
10	Gland nut	1.4305	A 276 Grade 303
11	Handwheel	1.4571	A 313 Grade 316Ti
12	Spring	1.4310	A 313 Grade 301
13	Bush	CW452K	B 159 UNS C51900

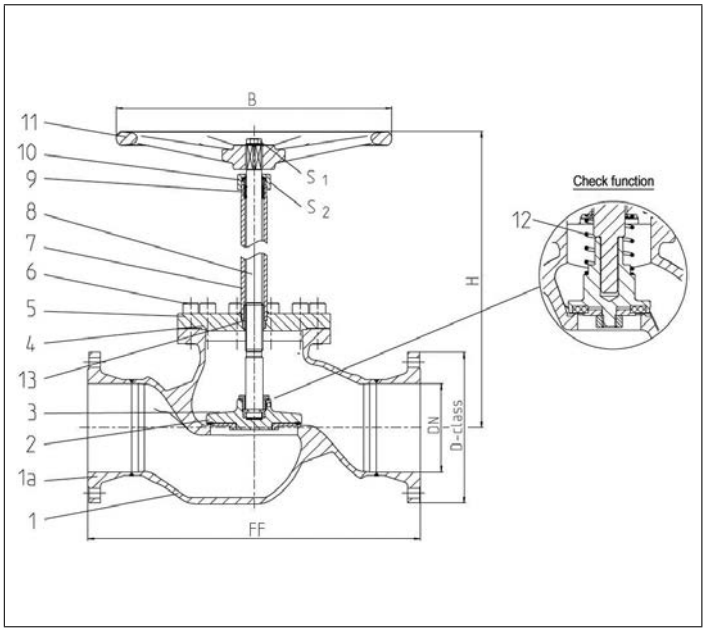

Type 03341 - Standard design	Technical data	
Nominal size	**DN**	**200**
Dimension code	.X.	8000
Flange-Ø	D-class	345
Face-to-face dimension	FF	760
Height	H	560
Handwheel-Ø	B	630
Wrench size across flats	S_1	30
Wrench size across flats	S_2	65
Weight	ca. kg	135
Kvs-Value	m^3/h	680
Cv-Value	gal/min	793

Dimensions in mm.

Globe Valves

Type 01252 - Bellow Sealed Globe Valve

Cryogenic-Bellow Sealed Globe Valve, PN50

Stainless steel body and topwork,
" live loaded " gland packing
" cleaned and degreased for oxygen service "

Part No. 01252.X.002*
* Butt weld connection for stainless steel pipes acc. to ISO 1127 or ASTM A312

Part No. 01252.X.0024
Socket weld connection for stainless steel pipes acc. to ISO 1127 or ASTM A312

Available options - on request only:
· Welded stainless steel stubs acc. to ISO 1127 or ASTM A312 - length FF + 200mm
· Extension H up to 900mm
· Valve with control disc (tapered design)
· Further pipe wall thicknesses

Applications:
Approved for air gases, vapours and cryogenic liquefied gases incl. LNG.
Working temperature: -196°C / -321°F (77K) up to +120°C / +248°F (393K)
Leak rate: 10^{-6} mbar ltr / sec outside
10^{-4} mbar ltr / sec seat

Materials		DIN EN	ASTM
1	Body	1.4308	A 351 CF8
2	Valve seal	PTFE / Carbon filled (25%)	
3	Disc	1.4301	A 276 Grade 304
4	Bonnet gasket	PTFE	
5	Headpiece	1.4301	A 276 Grade 304
6	Bellow stem	1.4571	A 276 Grade 316Ti
7	Bolts	1.4301/A2	A 194 B8
8	Bellow	1.4571	A 276 Grade 316Ti
9	Elongation tube	1.4541	A 213 TP 321
10	Headpiece	1.4301	A 276 Grade 304
11	Bush	CW452K	B 159 UNS C51900
12	Stem	1.4301	A 276 Grade 304
13	Gland packing	Graphite / PTFE / MICA	
14	Gland nut	1.4305	A 276 Grade 303
15	Handwheel	Aluminium alloy	

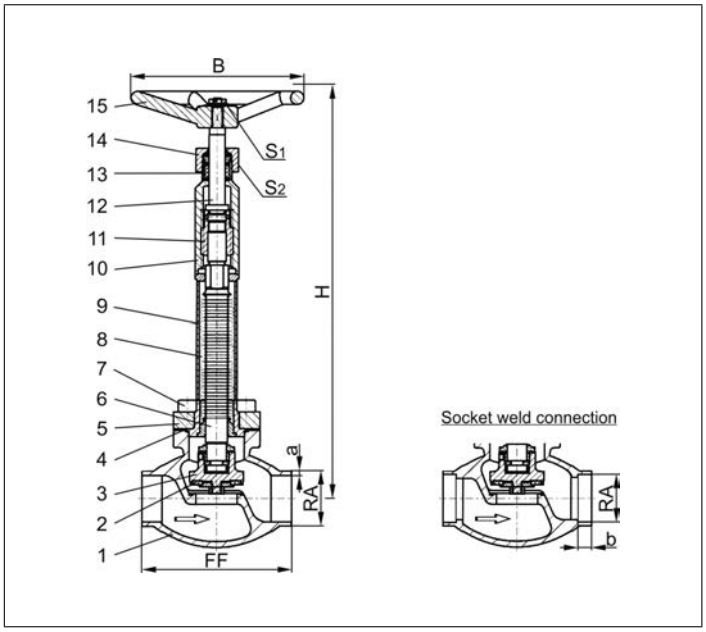

Type 01252 - Standard design	Technical data									
Nominal size	**DN**	**10**	**15**	**15**	**20**	**25**	**32**	**40**	**40**	**50**
Dimension code	.X.	1012	1517	1521	2026	2533	3238	4042	4048	5060
Face-to-face dimension	FF	70	85	85	100	115	115	130	130	155
Height	H	380	380	380	380	380	380	380	380	380
Outside pipe-Ø ISO 1127	RA	12.0	17.2	21.3	26.9	33.7	38.0	42.4	48.3	60.3
Wall thickness pipe ISO 1127	a	1.0	1.6	2.0	2.0	2.0	2.0	2.0	2.0	2.0
Outside pipe-Ø ASTM A312	RA	13.72	17.15	21.34	26.67	33.40	-	42.16	48.26	60.33
Wall thickness pipe ASTM A312	a	dimensions acc. to S10 or S40								
Socket depth	b	6	10	10	13	13	-	13	13	16
Handwheel-Ø	B	150	150	150	150	150	150	150	150	150
Wrench size across flats	S_1	7	7	7	7	7	10	10	10	10
Wrench size across flats	S_2	30	30	30	30	30	36	36	36	36
Weight	ca. kg	1.6	1.85	1.9	2.3	2.7	3.6	5.1	5.1	7.7
Kvs-Value	m^3/h	1.6	2.8	4.3	6.7	11.5	14.0	20.6	22.6	37.1
Cv-Value	gal/min	1.9	3.3	5.0	7.8	13.4	16.2	23.9	26.3	43.2

Dimensions in mm.

Edition 2022-11

Globe Valves

Type 03252 - Bellow Sealed Globe Valve

Cryogenic-Bellow Sealed Globe Valve, PN40

Stainless steel body and topwork,
" live loaded " gland packing
" cleaned and degreased for oxygen service "

Part No. 03252.X.0022
Flanged connection acc. to DIN EN 1092-1 PN40

Available options - on request only:
· Extension H up to 900mm
· Valve with control disc (tapered design)

Applications:
Approved for air gases, vapours and cryogenic liquefied gases incl. LNG.
Working temperature: -196°C / -321°F (77K) up to +120°C / +248°F (393K)
Leak rate:: 10^{-6} mbar ltr / sec outside, 10^{-4} mbar ltr / sec seat

Materials		DIN EN	ASTM
1	Body	1.4308	A 351 CF8
2	Valve seal	PTFE / Carbon filled (25%)	
3	Disc	1.4301	A 276 Grade 304
4	Bonnet gasket	PTFE	
5	Headpiece	1.4301	A 276 Grade 304
6	Bellow stem	1.4571	A 276 Grade 316Ti
7	Bolts	1.4301/A2	A 194 B8
8	Bellow	1.4571	A 276 Grade 316Ti
9	Elongation tube	1.4541	A 213 TP 321
10	Headpiece	1.4301	A 276 Grade 304
11	Bush	CW452K	B 159 UNS C51900
12	Stem	1.4301	A 276 Grade 304
13	Gland packing	Graphite / PTFE / MICA	
14	Gland nut	1.4305	A 276 Grade 303
15	Handwheel	Aluminium alloy	

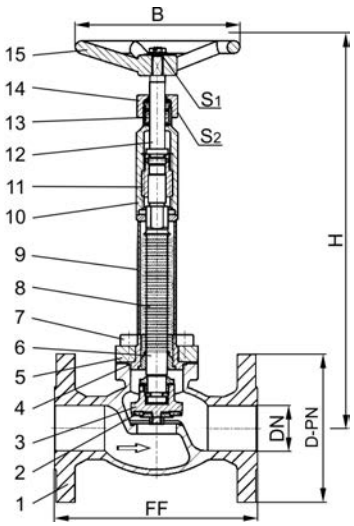

Type 03252 - Standard design	Technical data					
Nominal size	**DN**	**15**	**20**	**25**	**40**	**50**
Dimension code - Flange EN 1092-1 PN40	.X.	0150	0200	0250	0400	0500
Flange-Ø	D-PN	95	105	115	150	165
Face-to-face dimension	FF	140	150	160	200	230
Height	H	380	380	380	380	380
Handwheel-Ø	B	150	150	150	150	150
Wrench size across flats	S_1	7	7	7	10	10
Wrench size across flats	S_2	30	30	30	36	36
Weight	ca. kg	3.5	5.0	5.2	10.1	13.8
Kvs-Value	m^3/h	4.3	6.7	11.5	22.6	37.1
Cv-Value	gal/min	5.0	7.8	13.4	26.3	43.2

Dimensions in mm.

Globe Valves

Type 03252 - Bellow Sealed Globe Valve

Cryogenic-Bellow Sealed Globe Valve, class 300

Stainless steel body and topwork,
" live loaded " gland packing
" cleaned and degreased for oxygen service "

Part No. 03252.X.0023
Flanged connection acc. to ANSI B16.5 class 300

Available options - on request only:
· Extension H up to 900mm
· Valve with control disc (tapered design)

Applications:
Approved for air gases, vapours and cryogenic liquefied gases incl. LNG.
Working temperature: -196°C / -321°F (77K) up to +120°C / +248°F (393K)
Leak rate: 10^{-6} mbar ltr / sec outside, 10^{-4} mbar ltr / sec seat

Materials		DIN EN	ASTM
1	Body	1.4308	A 351 CF8
2	Valve seal	PTFE / Carbon filled (25%)	
3	Disc	1.4301	A 276 Grade 304
4	Bonnet gasket	PTFE	
5	Headpiece	1.4301	A 276 Grade 304
6	Bellow stem	1.4571	A 276 Grade 316Ti
7	Bolts	1.4301/A2	A 194 B8
8	Bellow	1.4571	A 276 Grade 316Ti
9	Elongation tube	1.4541	A 213 TP 321
10	Headpiece	1.4301	A 276 Grade 304
11	Bush	CW452K	B 159 UNS C51900
12	Stem	1.4301	A 276 Grade 304
13	Gland packing	Graphite / PTFE / MICA	
14	Gland nut	1.4305	A 276 Grade 303
15	Handwheel	Aluminium alloy	

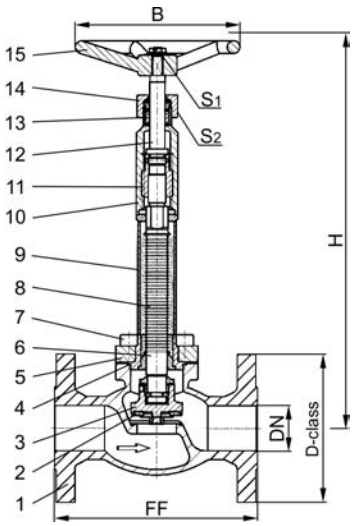

Type 03252 - Standard design	Technical data					
Nominal size	**DN**	**15**	**20**	**25**	**40**	**50**
Dimension code - Flange ANSI B16.5 class 300	.X.	0400	0600	1000	1400	2000
Flange-Ø	D-class	95	115	125	155	165
Face-to-face dimension	FF	140	150	160	200	230
Height	H	380	380	380	380	380
Handwheel-Ø	B	150	150	150	150	150
Wrench size across flats	S_1	7	7	7	10	10
Wrench size across flats	S_2	30	30	30	36	36
Weight	ca. kg	3.5	5.0	5.2	10.1	13.8
Kvs-Value	m^3/h	4.3	6.7	11.5	22.6	37.1
Cv-Value	gal/min	5.0	7.8	13.4	26.3	43.2

Dimensions in mm.

Edition 2022-11

Globe Valves

Type 03252 - Bellow Sealed Globe Valve

Cryogenic-Bellow Sealed Globe Valve, class 150

Stainless steel body and topwork,
" live loaded " gland packing
" cleaned and degreased for oxygen service "

Part No. 03252.X.0021
Flanged connection acc. to ANSI B16.5 class 150

Available options - on request only:
· Extension H up to 900mm
· Valve with control disc (tapered design)

Applications:
Approved for air gases, vapours and cryogenic liquefied gases incl. LNG.
Working temperature: -196°C / -321°F (77K) up to +120°C / +248°F (393K)
Leak rate: 10^{-6} mbar ltr / sec outside, 10^{-4} mbar ltr / sec seat

Materials		DIN EN	ASTM
1	Body	1.4308	A 351 CF8
2	Valve seal	PTFE / Carbon filled (25%)	
3	Disc	1.4301	A 276 Grade 304
4	Bonnet gasket	PTFE	
5	Headpiece	1.4301	A 276 Grade 304
6	Bellow stem	1.4571	A 276 Grade 316Ti
7	Bolts	1.4301/A2	A 194 B8
8	Bellow	1.4571	A 276 Grade 316Ti
9	Elongation tube	1.4541	A 213 TP 321
10	Headpiece	1.4301	A 276 Grade 304
11	Bush	CW452K	B 159 UNS C51900
12	Stem	1.4301	A 276 Grade 304
13	Gland packing	Graphite / PTFE / MICA	
14	Gland nut	1.4305	A 276 Grade 303
15	Handwheel	Aluminium alloy	

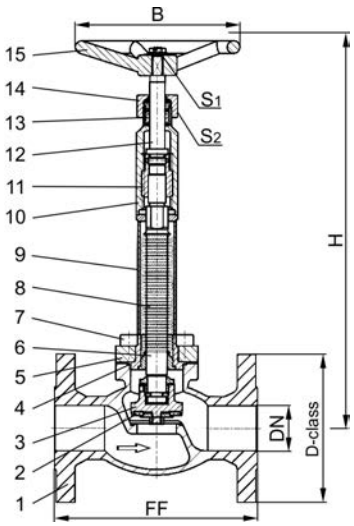

Type 03252 - Standard design	Technical data					
Nominal size	**DN**	**15**	**20**	**25**	**40**	**50**
Dimension code - Flange ANSI B16.5 class 150	.X.	0400	0600	1000	1400	2000
Flange-Ø	D-class	90	100	110	125	150
Face-to-face dimension	FF	140	150	160	200	230
Height	H	380	380	380	380	380
Handwheel-Ø	B	150	150	150	150	150
Wrench size across flats	S_1	7	7	7	10	10
Wrench size across flats	S_2	30	30	30	36	36
Weight	ca. kg	3.5	5.0	5.2	10.1	13.8
Kvs-Value	m^3/h	4.3	6.7	11.5	22.6	37.1
Cv-Value	gal/min	5.0	7.8	13.4	26.3	43.2

Dimensions in mm.

Globe Valves

Type 01420 - Globe Valve

Top Entry Cryogenic-Globe Valves, PN50 (DN100=PN40)

Stainless steel body and topwork,
" live loaded " gland packing
" cleaned and degreased for oxygen service "

Part No. 01420.X.0*81
Butt weld connection for stainless steel pipes acc. to ISO 1127 or ASTM A312

Available options - on request only:
· Extension H and E acc. to customer specification
· Valve with check disc

Applications:
Approved for air gases, vapours and cryogenic liquefied gases incl. LNG.
Working temperature: -196°C / -321°F (77K) up to +120°C / +248°F (393K)

Materials		DIN EN	ASTM
1	Body	1.4308	A 351 CF8
2	Valve seal up to DN50	PTFE / Carbon filled (25%)	
2a	Valve seal from DN65	PTFE	
3	Disc	1.4301	A 276 Grade 304
4	Guide bush	CW453K	B 103 UNS C52100
5	Stem	1.4301	A 276 Grade 304
6	Elongation tube	1.4541	A 213 TP 321
7	Elongation tube	1.4541	A 213 TP 321
8	Cold box feature	1.4301	A 276 Grade 304
9	Headpiece flange	1.4301	A 276 Grade 304
10	Headpiece	1.4301	A 276 Grade 304
11	Bolts	1.4301/A2	A 193 B8
12	Gland packing	Graphite / PTFE / MICA	
13	Gland nut	1.4404	A 276 Grade 316L
14	Handwheel	Aluminium alloy	

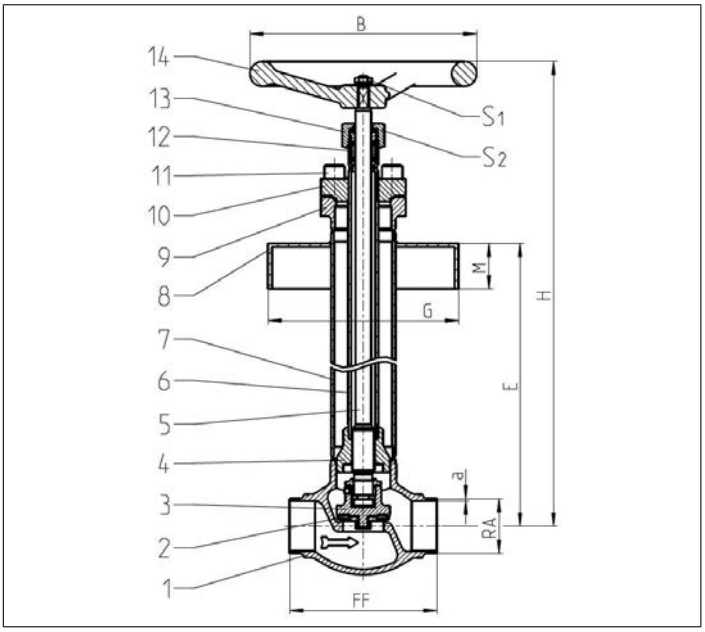

Type 01420 - Standard design	Technical data									
Nominal size	**DN**	**10**	**15**	**20**	**25**	**40**	**50**	**65**	**80**	**100**
Dimension code	.X.	1013	1521	2026	2533	4048	5060	6573	8088	0114
Face-to-face dimension	FF	70	85	100	115	130	155	205	245	280
Height	H	690	690	690	690	710	780	790	840	960
Handwheel-Ø	B	100	100	100	100	200	200	250	315	315
Outside pipe -Ø ASTM A312	RA	13.50	21.34	26.67	33.40	48.26	60.33	73.02	88.90	114.30
Wall thickness pipe ASTM A312	a	dimensions acc. to S10 or S40								
Length	A	540	540	540	540	540	610	610	640	750
Length	G	acc. to customer specification								
Length	M	acc. to customer specification								
Wrench size across flats	S_1	10	10	10	10	13	13	13	13	13
Wrench size across flats	S_2	27	27	27	27	32	32	41	41	41
Weight	ca. kg	4.0	4.0	4.8	5.1	9.1	11.5	19.6	26.9	37.4
Kvs-Value	m^3/h	1.6	4.3	6.7	11.5	22.6	37.1	71.1	104.0	168.0
Cv-Value	gal/min	1.9	5.0	7.8	13.4	26.3	43.2	82.9	121.3	196.0
Stroke	mm	11	12	12	12	15	19	23	25	30

Dimensions in mm.

Edition 2022-11

Globe Valves

Type 01950 - Globe Valve

Liquid Cylinder Valves (LCV), PN42

Brass body and topwork,
42.0 bar (4200 KPa)
" cleaned and degreased for oxygen service "
Handwheel colors: green, blue or grey

Part No. 01950.T001.XXXXXX (H=73mm)
Part No. 01950.T003.XXXXXX (H=107mm)
Part No. 01950.T005.XXXXXX (H=165mm)
Inlet: stub end, female thread type G (BSPP) or NPT
Outlet: stub end, female thread type G (BSPP) or NPT

Available options - on request only:
· Customised stub length
· Printed hub cap with customised design
· Additional handhweel color

Applications:
Approved for air gases, vapours and cryogenic liquefied gases.
Working temperature: -196°C / -321°F (77K) up to +75°C / +167°F (348K)

Materials		DIN EN	ASTM
1	Body	CW617N	B 283 UNS C37700
2	Bonnet	CW614N	B 455 UNS C38500
3	Gasket	Copper	
4	Stem seal gasket	PTFE	
5	Upper stem	CW614N	B 455 UNS C38500
6	Lower spindle	CW614N	B 455 UNS C38500
7	Disc	PCTFE	
8	V packing	PTFE	
9	Gland packing	CW614N	B 455 UNS C38500
10	Top washer	PTFE	
11	Handwheel	C.Alum. + P.C.	
12	Disc washer	1.4301	A 276 Grade 304
13	Flat washer	1.4301	A 276 Grade 304
14	Hub cap	Mild steel zinc plated powder coating	
15	Nyloc nut	1.4301	A 276 Grade 304
16	Stubs	1.4306	A 312 TP 304/304L

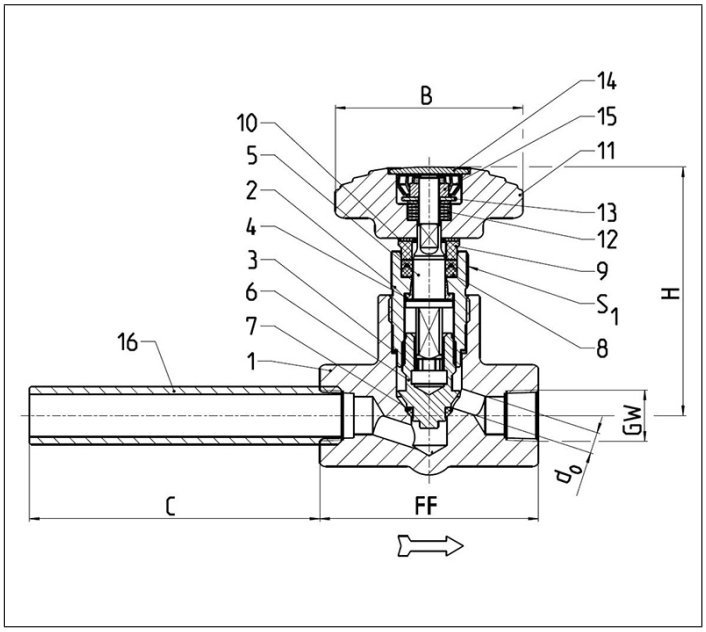

Type 01950 - Standard design	Technical data				
Nominal size	**DN**	**6**	**8**	**10**	**15**
Thread size	GW	1/8	1/4	3/8	1/2
Face-to-face dimension	FF	64.5	64.5	64.5	64.5
Height	H	73 / 107 / 165			
Orifice	d_0	6.25	6.25	10.25	10.25
Stub length	C	53.85	53.85	53.85	53.85
Outside pipe-Ø ISO 1127	RA	10.2	13.5	17.2	21.3
Wall thickness pipe ISO 1127	a	1.6	2.0	2.0	2.0
Outside pipe-Ø ASTM A312	RA	10.3	13.7	17.1	21.3
Wall thickness pipe ASTM A312	a	dimensions acc. to S40			
Handwheel-Ø	B	67.0	67.0	67.0	67.0
Wrench size across flats	S_1	22	22	22	22
Weight	ca. kg	0.65 / 0.75 / 0.83			
Kvs-Value	m^3/h	0.94	0.94	1.78	1.74
Cv-Value	gal/min	1.09	1.09	2.08	2.01

Dimensions in mm.

Globe Valves

Type 1114 - Globe Valve

Cryogenic-Globe Valves, PN50

Stainless steel body and topwork,
Inner parts made of brass
" live loaded " gland packing
" cleaned and degreased for oxygen service "

Available options - on request only:
· Welded stainless steel stubs acc. to ISO 1127 or ASTM A312 - length FF + 200mm
· Extension H up to 900mm
· Valve with control disc (tapered design)
· Disc with PCTFE seal
· Further connection types

Applications:
Approved for air gases, vapours and cryogenic liquefied gases incl. LNG.
Working temperature: -196°C / -321°F (77K) up to +120°C / +248°F (393K)
Recommended working temperature (for versions without extension):
-60°C / -76°F (213K) up to +120°C / +248°F (393K)

Materials		DIN EN	ASTM
1	Body	1.4308	A 351 CF8
2	Valve seal	PTFE / Carbon filled (25%)	
3	Disc up to DN40	CW614N	B 283 UNS C38500
3a	Disc from DN50	CW509L	B 111 UNS C28000
4	Bonnet gasket	PTFE	
5	Headpiece	1.4308	A 351 CF8
6	Bolts	1.4301/A2	A 320 B8
7	Elongation tube	1.4541	A 213 TP 321
8	Stem	1.4301	A 479 Grade 304
9	Gland packing	Graphite / PTFE	
10	Gland nut	CW614N	B 283 UNS C38500
11	Handwheel	Aluminium alloy	
12	Spring	CW452K	B 159 UNS C51900
13	Bush	CW452K	B 159 UNS C51900
14	Sleeve	CW614N	B 283 UNS C38500

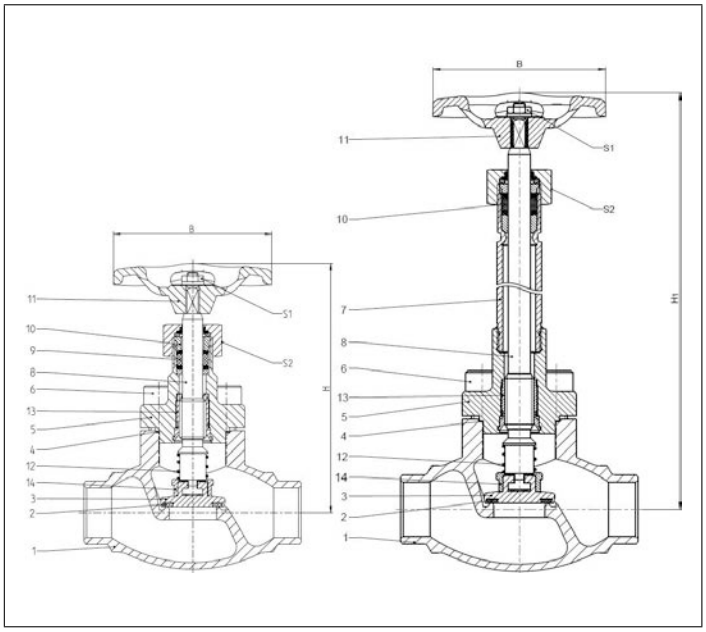

Technical Data - Standard design					
Nominal size [DN]	Height (H) [mm]	Height (H_1) [mm]	Handwheel-Ø (B) [mm]	Wrench size across flats (S_1) [mm]	Wrench size across flats (S_2) [mm]
10	140	270/370	100	7	27
15	140	270/370	100	7	27
20	140	270/370	100	7	27
25	140	270/370	100	7	27
40	175	270/370	125	10	32
50	200	270/370	125	10	32

Edition 2022-11

Type 1114 - Globe Valve

Connection types

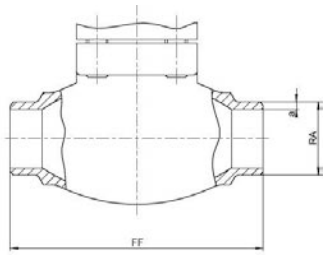

Butt weld connection acc. to
· ISO 1127

DN	Face-to-face dim. (FF) [mm]	Outside pipe-Ø ISO (RA) [mm]	Wall thickness pipe ISO (a) [mm]	Kvs-value [m³/h]	Cv-value [gal/min]	Weight, w.e.* [kg]	Part No.
10	70	13.5	2.3	1.6	1.9	0.85	1114.0135023.X0
15	85	17.2	1.6	3.8	4.4	0.96	1114.0172016.X0
15	85	21.3	2.0	4.3	5.0	0.98	1114.0213020.X0
20	100	26.9	2.0	6.7	7.8	1.43	1114.0269020.X0
25	115	33.7	2.6	11.5	13.4	1.92	1114.0337026.X0
40	130	42.4	2.6	20.6	23.9	3.49	1114.0424026.X0
40	130	48.3	2.6	22.6	26.3	3.36	1114.0483026.X0
50	155	60.3	2.6	37.1	43.2	4.94	1114.0603026.X0

Butt weld connection acc. to
· ASTM A312

DN	Face-to-face dim. (FF) [mm]	Outside pipe-Ø ASTM (RA) [mm]	Wall thickness pipe ASTM (a) [mm]	Kvs-value [m³/h]	Cv-value [gal/min]	Weight, w.e.* [kg]	Part No.
10	70	13.7	2.3	1.6	1.9	0.85	1114.0137S40.X0
15	85	17.1	1.6	3.8	4.4	0.96	1114.0171S10.X0
15	85	21.3	2.1	4.3	5.0	0.98	1114.0213S10.X0
20	100	26.6	2.1	6.7	7.8	1.43	1114.0266S10.X0
25	115	33.4	2.7	11.5	13.4	1.92	1114.0334S10.X0
40	130	42.4	2.7	20.6	23.9	3.49	1114.0424S10.X0
40	130	48.2	2.7	22.6	26.3	3.36	1114.0482S10.X0
50	155	60.3	2.7	37.1	43.2	4.94	1114.0603S10.X0

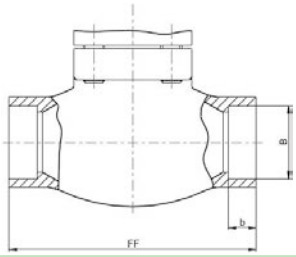

Socket weld connection acc. to
· ISO 1127
· ASTM A312

DN	Face-to-face dim. (FF) [mm]	Socket depth (b) [mm]	Socket diameter (B) [mm]	Kvs-value [m³/h]	Cv-value [gal/min]	Weight, w.e.* [kg]	Part No.
10	70	6.0	14.1	1.6	1.9	0.85	1114.0141000.X0
15	85	8.0	17.5	3.8	4.4	0.96	1114.0175000.X0
15	85	10.0	21.5	4.3	5.0	0.98	1114.0215000.X0
20	100	13.0	27.5	6.7	7.8	1.43	1114.0275000.X0
25	115	13.0	34.1	11.5	13.4	1.92	1114.0341000.X0
40	130	13.0	42.8	20.6	23.9	3.49	1114.0428000.X0
40	130	13.0	48.65	22.6	26.3	3.36	1114.0486000.X0
50	155	16.0	61.1	37.1	43.2	4.94	1114.0611000.X0

* w.e. = without extension
X = 0 (without extension), 1 (with 270mm extension), 2 (with 370mm extension)

Type 1114 - Globe Valve

Connection types

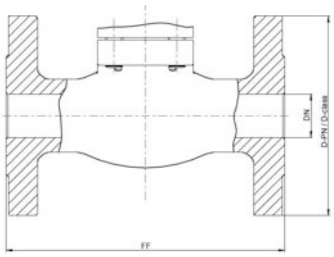

Flanged connection acc. to
· DIN EN 1092-1 PN40
· ANSI B16.5 class 300

DN / NPS	Face-to-face dim. (FF) [mm]	Flange-Ø (D-PN) [mm]	Flange-Ø (D-class) [mm]	Kvs-value [m³/h]	Cv-value [gal/min]	Weight, w.e.* [kg]	Part No. DIN EN	Part No. ANSI
15 / 1/2"**	161	95	95	4.3	5.0	2.86	1114.015P040.X0	1114.015C300.X0
20 / 3/4"**	181	105	115	6.7	7.8	3.72	1114.020P040.X0	1114.020C300.X0
25 / 1"	160	115	125	11.5	13.4	4.60	1114.025P040.X0	1114.025C300.X0
40 / 1-1/2"	200	150	155	22.6	26.3	8.62	1114.040P040.X0	1114.040C300.X0
50 / 2"	230	165	165	37.1	43.2	12.48	1114.050P040.X0	1114.050C300.X0

** welded version

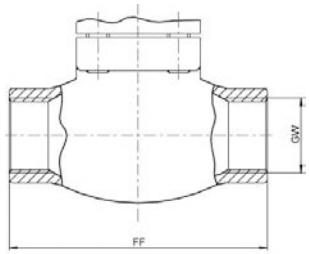

Female thread connection acc. to
· ISO 228/1 (G)
· NPT acc. to ANSI B 1.20.1 (NPT)

DN	Face-to-face dim. (FF) [mm]	Thread size (GW)	Kvs-value [m³/h]	Cv-value [gal/min]	Weight, w.e.* [kg]	Part No. G-thread	Part No. NPT-thread
10	70	1/4"	1.6	1.9	0.85	1114.FG02000.X0	1114.FN02000.X0
10	70	3/8"	2.2	2.6	0.85	1114.FG03000.X0	1114.FN03000.X0
15	85	1/2"	4.3	5.0	0.98	1114.FG04000.X0	1114.FN04000.X0
20	100	3/4"	6.7	7.8	1.43	1114.FG06000.X0	1114.FN06000.X0
25	115	1"	11.5	13.4	1.92	1114.FG10000.X0	1114.FN10000.X0
40	130	1-1/4"	20.6	23.9	3.49	1114.FG12000.X0	1114.FN12000.X0
40	130	1-1/2"	22.6	26.3	3.36	1114.FG14000.X0	1114.FN14000.X0
50	155	2"	37.1	43.2	4.94	1114.FG20000.X0	1114.FN20000.X0

Female thread connection acc. to
· ISO 7-1 (Rc or Rp)

DN	Face-to-face dim. (FF) [mm]	Thread size (GW)	Kvs-value [m³/h]	Cv-value [gal/min]	Weight, w.e.* [kg]	Part No. Rc-thread	Part No. Rp-thread
10	70	1/4"	1.6	1.9	0.85	1114.FR02000.X0	1114.FP02000.X0
10	70	3/8"	2.2	2.6	0.85	1114.FR03000.X0	1114.FP03000.X0
15	85	1/2"	4.3	5.0	0.98	1114.FR04000.X0	1114.FP04000.X0
20	100	3/4"	6.7	7.8	1.43	1114.FR06000.X0	1114.FP06000.X0
25	115	1"	11.5	13.4	1.92	1114.FR10000.X0	1114.FP10000.X0
40	130	1-1/4"	20.6	23.9	3.49	1114.FR12000.X0	1114.FP12000.X0
40	130	1-1/2"	22.6	26.3	3.36	1114.FR14000.X0	1114.FP14000.X0
50	155	2"	37.1	43.2	4.94	1114.FR20000.X0	1114.FP20000.X0

* w.e. = without extension
X = 0 (without extension), 1 (with 270mm extension), 2 (with 370mm extension)

Edition 2022-11

Globe Valves

Type 1116 - Globe Valve

Cryogenic-Globe Valves, PN50

Stainless steel body and topwork,
Inner parts made of stainless steel
" live loaded " gland packing
" cleaned and degreased for oxygen service "

Available options - on request only:
· Welded stainless steel stubs acc. to ISO 1127 or ASTM A312 - length FF + 200mm
· Extension H up to 900mm
· Valve with control disc (tapered design)
· Disc with PTFE/Carbon filled (25%) seal
· Further connection types

Applications:
Approved for air gases, vapours and cryogenic liquefied gases incl. LNG.
Working temperature: -196°C / -321°F (77K) up to +120°C / +248°F (393K)
Recommended working temperature (for versions without extension):
-60°C / -76°F (213K) up to +120°C / +248°F (393K)

Materials		DIN EN	ASTM
1	Body	1.4308	A 351 CF8
2	Valve seal	PCTFE	
3	Disc	1.4301	A 479 Grade 304
4	Bonnet gasket	PTFE	
5	Headpiece	1.4308	A 351 CF8
6	Bolts	1.4301/A2	A 320 B8
7	Elongation tube	1.4541	A 213 TP 321
8	Stem	1.4301	A 479 Grade 304
9	Gland packing	Graphite / PTFE	
10	Gland nut	1.4305	A 276 Grade 303
11	Handwheel	Aluminium alloy	
12	Spring	1.4310	A 276 Grade 301
13	Bush	1.4541	A 479 Grade 321
14	Sleeve	1.4571	A 276 Grade 316Ti

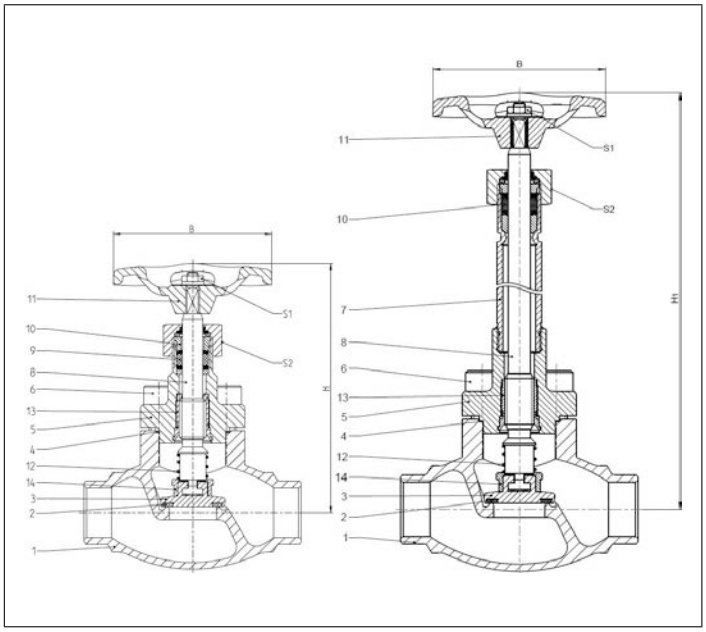

Technical Data - Standard design					
Nominal size [DN]	Height (H) [mm]	Height (H_1) [mm]	Handwheel-Ø (B) [mm]	Wrench size across flats (S_1) [mm]	Wrench size across flats (S_2) [mm]
10	140	270/370	100	7	27
15	140	270/370	100	7	27
20	140	270/370	100	7	27
25	140	270/370	100	7	27
40	175	270/370	125	10	32
50	200	270/370	125	10	32

Type 1116 - Globe Valve

Connection types

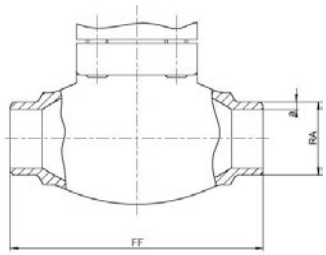

Butt weld connection acc. to
· ISO 1127

DN	Face-to-face dim. (FF) [mm]	Outside pipe-Ø ISO (RA) [mm]	Wall thickness pipe ISO (a) [mm]	Kvs-value [m³/h]	Cv-value [gal/min]	Weight, w.e.* [kg]	Part No.
10	70	13.5	2.3	1.6	1.9	0.85	1116.0135023.X0
15	85	17.2	1.6	3.8	4.4	0.96	1116.0172016.X0
15	85	21.3	2.0	4.3	5.0	0.98	1116.0213020.X0
20	100	26.9	2.0	6.7	7.8	1.43	1116.0269020.X0
25	115	33.7	2.6	11.5	13.4	1.92	1116.0337026.X0
40	130	42.4	2.6	20.6	23.9	3.49	1116.0424026.X0
40	130	48.3	2.6	22.6	26.3	3.36	1116.0483026.X0
50	155	60.3	2.6	37.1	43.2	4.94	1116.0603026.X0

Butt weld connection acc. to
· ASTM A312

DN	Face-to-face dim. (FF) [mm]	Outside pipe-Ø ASTM (RA) [mm]	Wall thickness pipe ASTM (a) [mm]	Kvs-value [m³/h]	Cv-value [gal/min]	Weight, w.e.* [kg]	Part No.
10	70	13.7	2.3	1.6	1.9	0.85	1116.0137S40.X0
15	85	17.1	1.6	3.8	4.4	0.96	1116.0171S10.X0
15	85	21.3	2.1	4.3	5.0	0.98	1116.0213S10.X0
20	100	26.6	2.1	6.7	7.8	1.43	1116.0266S10.X0
25	115	33.4	2.7	11.5	13.4	1.92	1116.0334S10.X0
40	130	42.4	2.7	20.6	23.9	3.49	1116.0424S10.X0
40	130	48.2	2.7	22.6	26.3	3.36	1116.0482S10.X0
50	155	60.3	2.7	37.1	43.2	4.94	1116.0603S10.X0

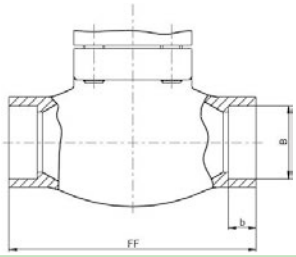

Socket weld connection acc. to
· ISO 1127
· ASTM A312

DN	Face-to-face dim. (FF) [mm]	Socket depth (b) [mm]	Socket diameter (B) [mm]	Kvs-value [m³/h]	Cv-value [gal/min]	Weight, w.e.* [kg]	Part No.
10	70	6.0	14.1	1.6	1.9	0.85	1116.0141000.X0
15	85	8.0	17.5	3.8	4.4	0.96	1116.0175000.X0
15	85	10.0	21.5	4.3	5.0	0.98	1116.0215000.X0
20	100	13.0	27.5	6.7	7.8	1.43	1116.0275000.X0
25	115	13.0	34.1	11.5	13.4	1.92	1116.0341000.X0
40	130	13.0	42.8	20.6	23.9	3.49	1116.0428000.X0
40	130	13.0	48.65	22.6	26.3	3.36	1116.0486000.X0
50	155	16.0	61.1	37.1	43.2	4.94	1116.0611000.X0

* w.e. = without extension
X = 0 (without extension), 1 (with 270mm extension), 2 (with 370mm extension)

Edition 2022-11

Type 1116 - Globe Valve

Connection types

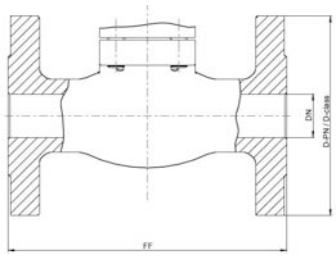

Flanged connection acc. to
· DIN EN 1092-1 PN40
· ANSI B16.5 class 300

DN / NPS	Face-to-face dim. (FF) [mm]	Flange-Ø (D-PN) [mm]	Flange-Ø (D-class) [mm]	Kvs-value [m³/h]	Cv-value [gal/min]	Weight, w.e.* [kg]	Part No. DIN EN	Part No. ANSI
15 / 1/2"**	161	95	95	4.3	5.0	2.86	1116.015P040.X0	1116.015C300.X0
20 / 3/4"**	181	105	115	6.7	7.8	3.72	1116.020P040.X0	1116.020C300.X0
25 / 1"	160	115	125	11.5	13.4	4.60	1116.025P040.X0	1116.025C300.X0
40 / 1-1/2"	200	150	155	22.6	26.3	8.62	1116.040P040.X0	1116.040C300.X0
50 / 2"	230	165	165	37.1	43.2	12.48	1116.050P040.X0	1116.050C300.X0

** welded version

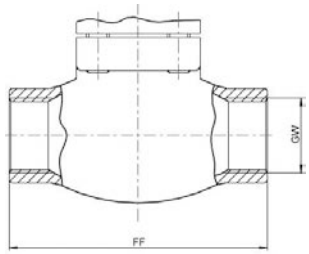

Female thread connection acc. to
· ISO 228/1 (G)
· NPT acc. to ANSI B 1.20.1 (NPT)

DN	Face-to-face dim. (FF) [mm]	Thread size (GW)	Kvs-value [m³/h]	Cv-value [gal/min]	Weight, w.e.* [kg]	Part No. G-thread	Part No. NPT-thread
10	70	1/4"	1.6	1.9	0.85	1116.FG02000.X0	1116.FN02000.X0
10	70	3/8"	2.2	2.6	0.85	1116.FG03000.X0	1116.FN03000.X0
15	85	1/2"	4.3	5.0	0.98	1116.FG04000.X0	1116.FN04000.X0
20	100	3/4"	6.7	7.8	1.43	1116.FG06000.X0	1116.FN06000.X0
25	115	1"	11.5	13.4	1.92	1116.FG10000.X0	1116.FN10000.X0
40	130	1-1/4"	20.6	23.9	3.49	1116.FG12000.X0	1116.FN12000.X0
40	130	1-1/2"	22.6	26.3	3.36	1116.FG14000.X0	1116.FN14000.X0
50	155	2"	37.1	43.2	4.94	1116.FG20000.X0	1116.FN20000.X0

Female thread connection acc. to
· ISO 7-1 (Rc or Rp)

DN	Face-to-face dim. (FF) [mm]	Thread size (GW)	Kvs-value [m³/h]	Cv-value [gal/min]	Weight, w.e.* [kg]	Part No. Rc-thread	Part No. Rp-thread
10	70	1/4"	1.6	1.9	0.85	1116.FR02000.X0	1116.FP02000.X0
10	70	3/8"	2.2	2.6	0.85	1116.FR03000.X0	1116.FP03000.X0
15	85	1/2"	4.3	5.0	0.98	1116.FR04000.X0	1116.FP04000.X0
20	100	3/4"	6.7	7.8	1.43	1116.FR06000.X0	1116.FP06000.X0
25	115	1"	11.5	13.4	1.92	1116.FR10000.X0	1116.FP10000.X0
40	130	1-1/4"	20.6	23.9	3.49	1116.FR12000.X0	1116.FP12000.X0
40	130	1-1/2"	22.6	26.3	3.36	1116.FR14000.X0	1116.FP14000.X0
50	155	2"	37.1	43.2	4.94	1116.FR20000.X0	1116.FP20000.X0

* w.e. = without extension
X = 0 (without extension), 1 (with 270mm extension), 2 (with 370mm extension)

Globe Valves

Type 11C01 - Globe Valve FullX

Top Entry Cryogenic-Globe Valves, up to PN63

Stainless steel body and topwork,
" live loaded " gland packing
" cleaned and degreased for oxygen service "

Butt weld connection for stainless steel pipes acc. to ISO 1127

Available options:
· Bellow, top position (with or without monitoring)
· Bellow, bottom position (with or without monitoring)
· Check function
· Control function
· Throttle function

- on request only:
· Further connection types

Applications:
Approved for hydrogen, air gases, vapours and cryogenic liquefied gases.
Working temperature: -269°C / -452°F (4K) up to +80°C / +176°F (353K)

Materials		DIN EN	ASTM
1	Body	1.4571	A 313 Grade 316TI
2	Valve seal	PCTFE	
3	Disc	1.4571	A 313 Grade 316TI
4	Guide	PTFE / Carbon filled (25%)	
5	Tube	1.4571	A 313 Grade 316TI
6	Hollow stem	1.4571	A 313 Grade 316TI
7	Collar	1.4404	A 276 Grade 316L
8	Flange	1.4404	A 276 Grade 316L
9	Bonnet gasket	PTFE	
10	Bushing	CW452K	B 159 UNS C51900
11	Bolt	A4-70	A 194 B8M
12	Nut	1.4404	A 276 Grade 316L
13	Head piece	1.4404	A 276 Grade 316L
14	Ball bearing	1.4125	440C
15	Sliding bushing	CW452K	B 159 UNS C51900
16	Stem ring	CW452K	B 159 UNS C51900
17	Gasket	PTFE / Carbon filled (25%)	
18	Cap	PVC	
19	Gland bolt	1.4404	A 276 Grade 316L
20	Wiper	PEEK	
21	Stem	1.4404	A 276 Grade 316L
22	Handwheel	1.4409	A 351 CF3M
23	O-ring	FPM (VITON)	

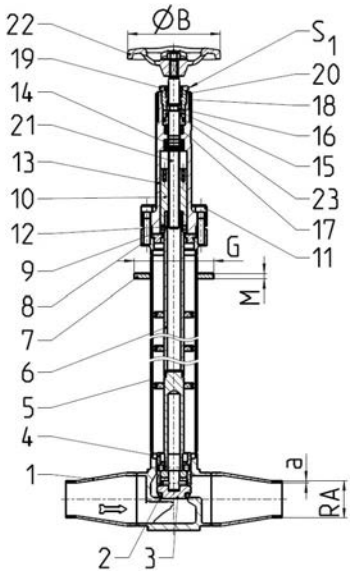

CE

Technical Data - Standard design						
Nominal size [DN]	Collar-Ø (G) [mm]	Length (M) [mm]	Handwheel-Ø (B) [mm]	Wrench size across flats (S_1) [mm]	Outside pipe-Ø ISO (RA) [mm]	Wall thickness pipe ISO (a) [mm]
10	60	5	100	24	17.2	1.8
10	71.5	5	100	24	17.2	1.8
15	60	5	100	24	21.3	2.0
15	71.5	5	100	24	21.3	2.0
20	60	5	100	24	26.9	2.3
20	71.5	5	100	24	26.9	2.3
25	60	5	100	24	33.7	2.6
25	71.5	5	100	24	33.7	2.6
32	84.4	5	125	30	42.4	2.6
40	84.4	5	125	30	48.3	2.6
50	109	5	125	30	60.3	2.9

Type 11C01 - Globe Valve FullX

Body types

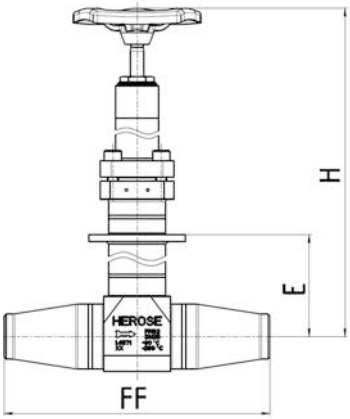

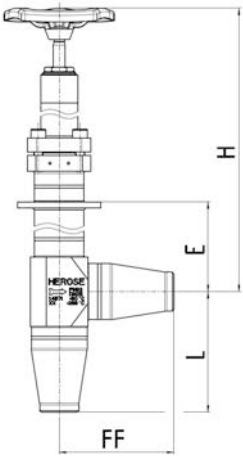

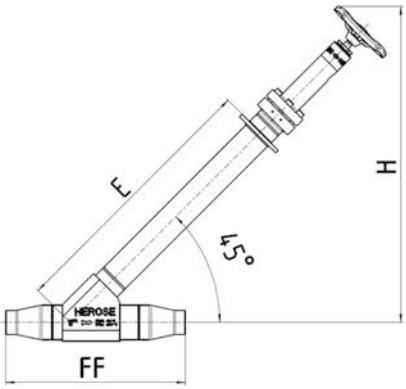

Straight body

DN	Face-to-face dim. (FF) [mm]	Height (H) [mm]	Length (E) [mm]	Kvs-value [m³/h]	Kvs-value *w.b.[m³/h]	Cv-value [gal/min]	Cv-value *w.b.[gal/min]	Weight [ca.kg]
10	150	535	330	3.4	3.4	4.0	4.0	3.05
15	150	535	330	4.4	4.4	5.1	5.1	3.07
20	195	535	330	9.8	9.5	11.4	11.0	3.67
25	195	535	330	12.3	12.0	14.3	14.0	3.71
32	235	690	440	25.8	25.8	30.0	30.0	7.95
40	235	690	440	28.3	28.8	32.9	32.9	8.08
50	280	775	520	44.0	44.0	51.2	40.7	11.21

*w.b. = with bellow

Body angle type

DN	Face-to-face dim. (FF) [mm]	Height (H) [mm]	Length (E) [mm]	Length (L) [mm]	Kvs-value [m³/h]	Kvs-value *w.b.[m³/h]	Cv-value [gal/min]	Cv-value *w.b.[gal/min]	Weight [ca.kg]
10	80	535	330	80	4.7	4.7	5.5	5.5	3.03
15	80	535	330	80	5.7	5.7	6.6	6.6	3.05
20	100	535	330	100	19.8	16.5	23.0	19.2	3.62
25	100	535	330	100	22.3	19.0	25.9	22.1	3.66
32	120	690	440	120	41.1	33.3	47.8	38.7	7.73
40	120	690	440	120	43.6	35.8	50.7	41.6	7.76
50	140	775	520	140	80.0	63.0	93.0	73.3	10.54

*w.b. = with bellow

Body Y type

DN	Face-to-face dim. (FF) [mm]	Height (H) [mm]	Length (E) [mm]	Kvs-value [m³/h]	Kvs-value *w.b.[m³/h]	Cv-value [gal/min]	Cv-value *w.b.[gal/min]	Weight [ca.kg]
10	185	430	370	4.2	4.2	4.9	4.9	3.36
15	185	430	370	5.2	5.2	6.0	6.0	3.37
20	250	440	375	11.9	7.7	13.8	9.0	4.36
25	250	440	375	14.4	10.2	16.7	11.9	4.40
32	285	570	500	34.4	28.6	40.0	33.3	9.15
40	285	570	500	36.9	31.1	42.9	36.2	9.18
50	340	640	595	69.8	35.0	81.2	73.3	13.51

*w.b. = with bellow

Type 11C01 - Globe Valve FullX

Flow coefficient for Control Valves - Control characteristic equal percentage Kvs-Value in m^3/h, Cv-Value in gal/min. These figures refer to measurements for the flow direction.

Type 11C01 control function

DN	Kvs [m^3/h]	Cv [gal/min]	Stroke [mm]
10	1,0	1,2	10
15	3,5	4,1	10
20	4,0	4,7	10
25	6,3	7,3	10
32	10,0	11,6	20
40	19,0	22,1	20
50	30,0	34,9	20

Ideal inherent equal percentage characteristic curve acc. to DIN IEC 60534 Part 2-4

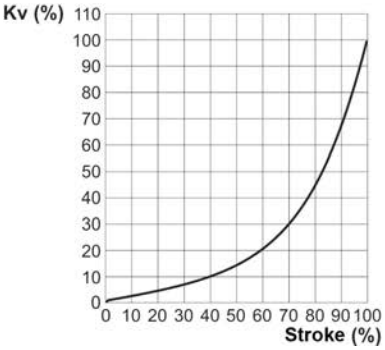

Sample drawing cone,
control charactristic equal percentage

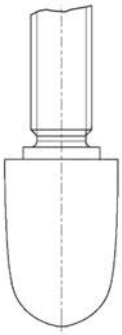

Globe Valves

Type 11C01 - Globe Valve FullX

Configurable options
For configurable types, the HEROSE part number consists as follows:

Type	Series	Dimension code	Option codes
11C01.	A001.	0250.	ESR-MYJ-CBQ-QXY-KCZ-JRB-LYV-SNP-HTW-GCX
1	2	3	4 up to 13

	Selection of the type					Type
		Product group	Market segment	Valve design	Product approval	
1	Type	Globe Valve FullX	Cryogenic	Top Entry	PED	11C01

	Selection of the series				Series
2	Series	increased external tightness	medium pressure rating	additional approval not selected	A001

	Selection of the nominal size		Dimension code
3	Nominal sizes	DN10	0100
		DN15	0150
		DN20	0200
		DN25	0250
		DN32	0320
		DN40	0400
		DN50	0500

	Selection of options		Option codes
4	Pressure rating	PN63	ESR

5	Approvals	PED DIN EN 1626	MYJ

6	Body types	Body angle type	CBQ
		Straight body	HJC
		Body Y type	PYU

Type 11C01 - Globe Valve FullX

HEROSE

		Nominal size	Body type	Connection type value inlet/outlet	Outside pipe-∅ ISO (RA) [mm]	Wall thickness pipe ISO (a) [mm]	Connection extension inlet/outlet	
7	Connections	DN10	Body angle type	Butt weld	17.2	1.8	not selected	QXY
		DN10	Straight body	Butt weld	17.2	1.8	not selected	KSP
		DN10	Body Y type	Butt weld	17.2	1.8	not selected	PKL
		DN15	Body angle type	Butt weld	21.3	2.0	not selected	CVP
		DN15	Straight body	Butt weld	21.3	2.0	not selected	MZE
		DN15	Body Y type	Butt weld	21.3	2.0	not selected	FYB
		DN20	Body angle type	Butt weld	26.9	2.3	not selected	BNN
		DN20	Straight body	Butt weld	26.9	2.3	not selected	DPN
		DN20	Body Y type	Butt weld	26.9	2.3	not selected	WHZ
		DN25	Body angle type	Butt weld	33.7	2.6	not selected	XZE
		DN25	Straight body	Butt weld	33.7	2.6	not selected	PKY
		DN25	Body Y type	Butt weld	33.7	2.6	not selected	CXP
		DN32	Body angle type	Butt weld	42.4	2.6	not selected	ZKC
		DN32	Straight body	Butt weld	42.4	2.6	not selected	GLU
		DN32	Body Y type	Butt weld	42.4	2.6	not selected	HHY
		DN40	Straight body	Butt weld	48.3	2.6	not selected	WUW
		DN40	Body angle type	Butt weld	48.3	2.6	not selected	RJE
		DN40	Body Y type	Butt weld	48.3	2.6	not selected	JBM
		DN50	Body angle type	Butt weld	60.3	2.9	not selected	BGA
		DN50	Straight body	Butt weld	60.3	2.9	not selected	WPW
		DN50	Body Y type	Butt weld	60.3	2.9	not selected	UXB

8	Disc function	lockable function	KCZ
		lockable check function	JDA
		lockable control function	SWX
		lockable throttle function	WVV

9	Operation	manual	YFW
		actuated	RQZ

10	Handwheel options	Material 1.4409	silver (natural)	JRB

		Bellow	Bellow position	Bellow monitoring	Dimension bellow monitoring	
11	Bellow options	not selected	not selected	not selected	not selected	LYV
		selected	top	not selected	not selected	MUR
		selected	bottom	not selected	not selected	FYX
		selected	top	selected	DIN EN ISO 8434-1-WDS-S6	GXD
		selected	bottom	selected	DIN EN ISO 8434-1-WDS-S6	XHA

		Nominal size	Body type	Collar diameter dimension (G) [mm]	Collar form	Collar height (M) [mm]	Collar position (E) [mm]	Collar thickness (C) [mm]	
12	Collar options	DN10/15	Body angle type/ Straight body	60.0	Washer, circular, unperforated	5.0	330.0	5.0	SNP
		DN10/15	Body Y type	60.0	Washer, circular, unperforated	5.0	370.0	5.0	GEM
		DN10/15	Body angle type/ Straight body	71.5	Washer, circular, unperforated	5.0	330.0	5.0	BBK
		DN10/15	Body Y type	71.5	Washer, circular, unperforated	5.0	370.0	5.0	DGJ
		DN20/25	Body angle type/ Straight body	71.5	Washer, circular, unperforated	5.0	330.0	5.0	BBK
		DN20/25	Body Y type	71.5	Washer, circular, unperforated	5.0	375.0	5.0	EMK
		DN20/25	Body angle type/ Straight body	60.0	Washer, circular, unperforated	5.0	330.0	5.0	SNP
		DN20/25	Body Y type	60.0	Washer, circular, unperforated	5.0	375.0	5.0	WLU
		DN32/40	Body angle type/ Straight body	84.0	Washer, circular, unperforated	5.0	440.0	5.0	WBE
		DN32/40	Body Y type	84.0	Washer, circular, unperforated	5.0	500.0	5.0	QWB
		DN50	Body angle type/ Straight body	109.0	Washer, circular, unperforated	5.0	520.0	5.0	JUP
		DN50	Body Y type	109.0	Washer, circular, unperforated	5.0	595.0	5.0	GSH

13	Material selection	Body material 1.4571	Sealing material made out of PCTFE	HTW

		Nominal size	Body type	Bonnet extension	Valve height (H) [mm]	
14	Valve height	DN10/15	Body angle type/ Straight body	with	535.0	GCX
		DN10/15	Body Y type	with	430.0	HDP
		DN20/25	Body angle type/ Straight body	with	535.0	GCX
		DN20/25	Body Y type	with	605.0	VCG
		DN32/40	Body angle type/ Straight body	with	690.0	AKQ
		DN32/40	Body Y type	with	570.0	WAM
		DN50	Body angle type/ Straight body	with	775.0	QJN
		DN50	Body Y type	with	640.0	FTP

Angle Valves
Type 01332 - Globe Valve Angle Type

Cryogenic-Globe Valves Angle Type, PN50

Stainless steel body and bronze topwork,
" live loaded " Stainless steel body and bronze topwork,
" cleaned and degreased for oxygen service "

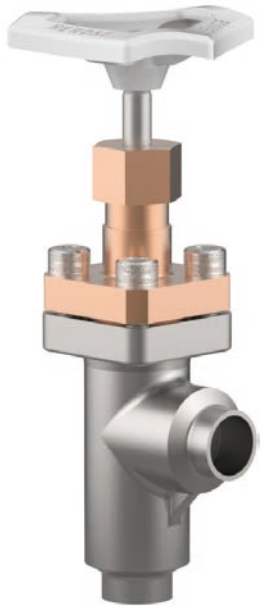

Part No. 01332.X.000*
* Butt weld connection for stainless steel pipes acc. to ISO 1127 or ASTM A312

Part No. 01332.X.0004
Socket weld connection for stainless steel pipes acc. to ISO 1127 or ASTM A312

Available options - on request only:
· Valve with control disc (tapered design)
· Valve with check disc
· Further pipe wall thicknesses

Applications:
Approved for air gases, vapours and cryogenic liquefied gases incl. LNG.
Working temperature: -196°C / -321°F (77K) up to +120°C / +248°F (393K)
Recommended working temperature: -60°C / -76°F (213K) up to +120°C / +248°F (393K)

Materials		DIN EN	ASTM
1	Body	1.4308	A 351 CF8
2	Valve seal	PTFE / Carbon filled (25%)	
3	Disc	CW614N	B 283 UNS C38500
4	Bonnet gasket	PTFE	
5	Headpiece	CC493K	B 505 UNS C93200
6	Bolts	1.4301/A2	A 194 B8
7	Stem	1.4301	A 276 Grade 304
9	Gland packing	Graphite / PTFE	
10	Gland nut	CW614N	B 283 UNS C38500
11	Handwheel	Aluminium alloy	

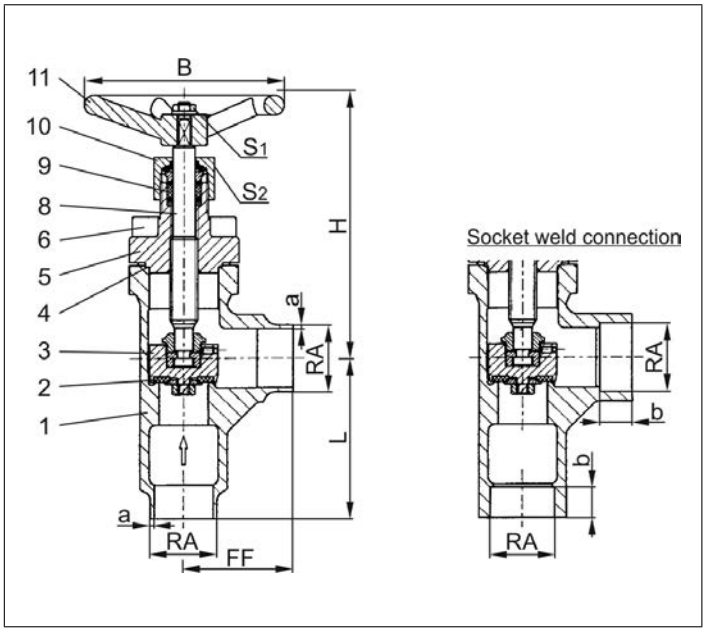

Type 01332 - Standard design	Technical data						
Nominal size	**DN**	**15**	**20**	**25**	**32**	**40**	**50**
Dimension code	.X.	1521	2026	2533	3242	4048	5060
Face-to-face dimension	FF	40	50	55	60	58	85
Height	H	140	140	140	170	175	200
Outside pipe-Ø ISO 1127	RA	21.3	26.9	33.7	42.0	48.3	60.3
Wall thickness pipe ISO 1127	a	2.0	2.0	2.0	2.0	2.0	2.0
Outside pipe-Ø ASTM A312	RA	21.34	26.67	33.4	-	48.26	60.33
Wall thickness pipe ASTM A312	a	dimensions acc. to S10 or S40					
Socket depth	b	10	13	13	13	13	16
Handwheel-Ø	B	100	100	100	125	125	125
Length	L	50	65	80	80	90	90
Wrench size across flats	S_1	7	7	7	10	10	10
Wrench size across flats	S_2	30	30	30	36	36	36
Weight	ca. kg	1.0	1.3	1.7	3.1	3.3	6.0
Kvs-Value	m^3/h	6.0	10.5	17.2	32.0	35.0	57.0
Cv-Value	gal/min	7.0	12.2	20.0	37.2	40.7	66.3

Dimensions in mm.

Edition 2022-11

Angle Valves
Type 01352 - Globe Valve Angle Type

Cryogenic-Globe Valves Angle Type, PN50

Stainless steel body and topwork,
" live loaded " gland packing
" cleaned and degreased for oxygen service "

Part No. 01352.X.000*
* Butt weld connection for stainless steel pipes acc. to ISO 1127 or ASTM A312

Part No. 01352.X.0004
Socket weld connection for stainless steel pipes acc. to ISO 1127 or ASTM A312

Available options - on request only:
· Valve with control disc (tapered design)
· Valve with check disc
· Further pipe wall thicknesses

Applications:
Approved for air gases, vapours and cryogenic liquefied gases incl. LNG.
Working temperature: -196°C / -321°F (77K) up to +120°C / +248°F (393K)
Recommended working temperature: -60°C / -76°F (213K) up to +120°C / +248°F (393K)

Materials		DIN EN	ASTM
1	Body	1.4308	A 351 CF8
2	Valve seal	PTFE / Carbon filled (25%)	
3	Disc	1.4301	A 276 Grade 304
4	Bonnet gasket	PTFE	
5	Headpiece	1.4301 / 1.4308	A 276 Grade 304 / A 351 CF8
6	Bolts	1.4301/A2	A 194 B8
8	Stem	1.4301	A 276 Grade 304
9	Gland packing	Graphite / PTFE / MICA	
10	Gland nut	1.4305	A 276 Grade 303
11	Handwheel	Aluminium alloy	
13	Bush	CW452K	B 159 UNS C51900

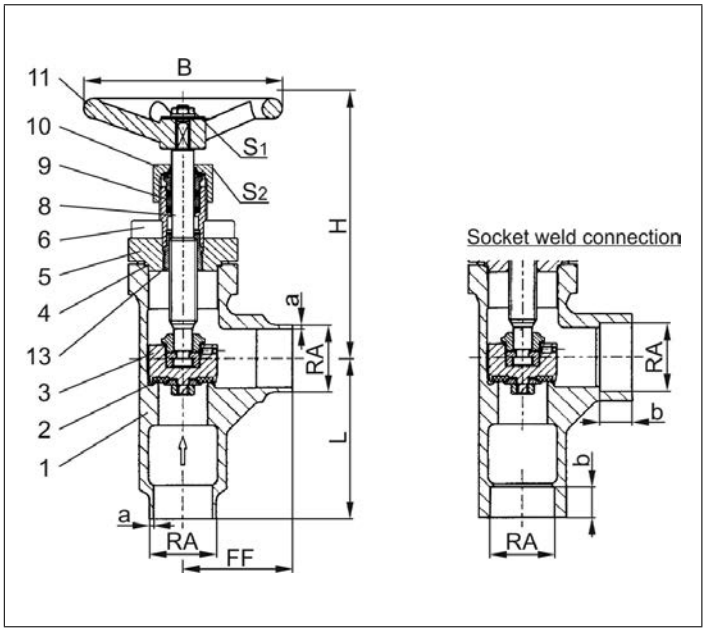

Type 01352 - Standard design	Technical data						
Nominal size	**DN**	**15**	**20**	**25**	**32**	**40**	**50**
Dimension code	.X.	1521	2026	2533	3242	4048	5060
Face-to-face dimension	FF	40	50	55	60	58	85
Height	H	140	140	140	170	175	200
Outside pipe-Ø ISO 1127	RA	21.3	26.9	33.7	42.0	48.3	60.3
Wall thickness pipe ISO 1127	a	2.0	2.0	2.0	2.0	2.0	2.0
Outside pipe-Ø ASTM A312	RA	21.34	26.67	33.4	-	48.26	60.33
Wall thickness pipe ASTM A312	a	dimensions acc. to S10 or S40					
Socket depth	b	10	13	13	13	13	16
Handwheel-Ø	B	100	100	100	125	125	125
Length	L	50	65	80	80	90	90
Wrench size across flats	S_1	7	7	7	10	10	10
Wrench size across flats	S_2	30	30	30	36	36	36
Weight	ca. kg	1.0	1.3	1.7	3.1	3.3	6.0
Kvs-Value	m^3/h	6.0	10.5	17.2	32.0	35.0	57.0
Cv-Value	gal/min	7.0	12.2	20.0	37.2	40.7	66.3

Dimensions in mm.

Angle Valves

Type 01322 - Globe Valve Angle Type

Cryogenic-Globe Valves Angle Type, PN50

Stainless steel body and bronze topwork
" live loaded " gland packing
" cleaned and degreased for oxygen service "

Part No. 01322.X.001* (H = 270mm)
Part No. 01322.X.002* (H = 370mm)
* Butt weld connection for stainless steel pipes acc. to ISO 1127 or ASTM A312

Part No. 01322.X.0014 (H = 270mm)
Part No. 01322.X.0024 (H = 370mm)
Socket weld connection for stainless steel pipes acc. to ISO 1127 or ASTM A312

Available options - on request only:
· Extension H up to 900mm
· Valve with control disc (tapered design)
· Valve with check disc
· Further pipe wall thicknesses

Applications:
Approved for air gases, vapours and cryogenic liquefied gases incl. LNG.
Working temperature: -196°C / -321°F (77K) up to +120°C / +248°F (393K)

Materials		DIN EN	ASTM
1	Body	1.4308	A 351 CF8
2	Valve seal	PTFE / Carbon filled (25%)	
3	Disc	CW614N	B 283 UNS C38500
4	Bonnet gasket	PTFE	
5	Headpieceflansch	CC493K	B 505 UNS C93200
6	Bolts	1.4301/A2	A 194 B8
7	Elongation tube	1.4541	A 213 TP 321
8	Stem	1.4301	A 276 Grade 304
9	Gland packing	Graphite / PTFE	
10	Gland nut	CW614N	B 283 UNS C38500
11	Handwheel	Aluminium alloy	

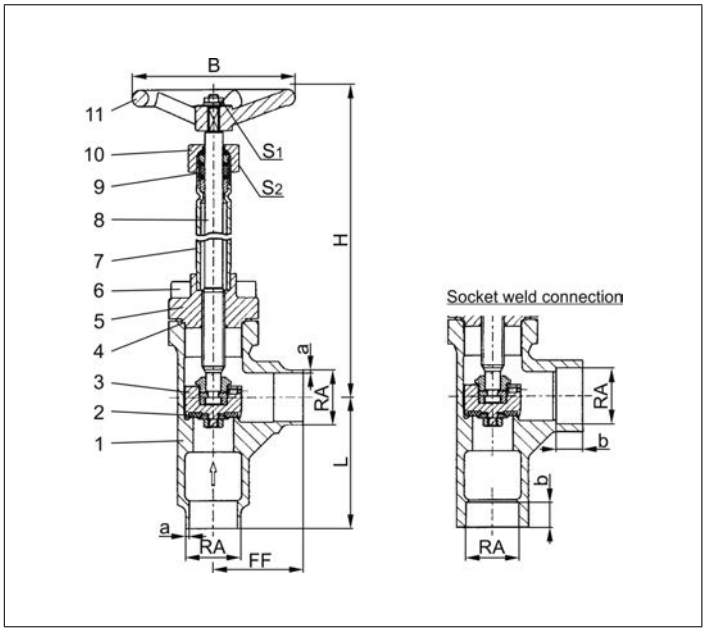

Type 01322 - Standard design	Technical data						
Nominal size	**DN**	**15**	**20**	**25**	**32**	**40**	**50**
Dimension code	.X.	1521	2026	2533	3242	4048	5060
Face-to-face dimension	FF	40	50	55	60	58	85
Height	H	270mm or 370mm					
Outside pipe-Ø ISO 1127	RA	21.3	26.9	33.7	42.0	48.3	60.3
Wall thickness pipe ISO 1127	a	2.0	2.0	2.0	2.0	2.0	2.0
Outside pipe-Ø ASTM A312	RA	21.34	26.67	33.40	-	48.26	60.33
Wall thickness pipe ASTM A312	a	dimensions acc. to S10 or S40					
Socket depth	b	10	13	13	13	13	16
Handwheel-Ø	B	100	100	100	125	125	125
Length	L	50	65	80	80	90	90
Wrench size across flats	S_1	7	7	7	10	10	10
Wrench size across flats	S_2	30	30	30	36	36	36
Weight	ca. kg	1.4	1.6	2.2	4.0	4.3	6.5
Kvs-Value	m^3/h	6.0	10.5	17.2	32.0	35.0	57.0
Cv-Value	gal/min	7.0	12.2	20.0	37.2	40.7	66.3

Dimensions in mm.

Edition 2022-11

Angle Valves

Type 01342 - Globe Valve Angle Type

Cryogenic-Globe and Globe/Check Valves, PN50

Stainless steel body and topwork,
" live loaded " gland packing
" cleaned and degreased for oxygen service "

Part No. 01342.X.001* (H = 270mm)
Part No. 01342.X.002* (H = 370mm)
* Butt weld connection for stainless steel pipes acc. to ISO 1127 or ASTM A312

Part No. 01342.X.0014 (H = 270 mm)
Part No. 01342.X.0024 (H = 370 mm)
Socket weld connection for stainless steel pipes acc. to ISO 1127 or ASTM A312

Available options - on request only:
· Extension H up to 900mm
· Valve with control disc (tapered design)
· Valve with check disc
· Further pipe wall thicknesses

Applications:
Approved for air gases, vapours and cryogenic liquefied gases incl. LNG.
Working temperature: -196°C / -321°F (77K) up to +120°C / +248°F (393K)

Materials		DIN EN	ASTM
1	Body	1.4308	A 351 CF8
2	Valve seal	PTFE / Carbon filled (25%)	
3	Disc	1.4301	A 276 Grade 304
4	Bonnet gasket	PTFE	
5	Headpiece	1.4301 / 1.4308	A 276 Grade 304 / A 351 CF8
6	Bolts	1.4301/A2	A 194 B8
7	Elongation tube	1.4541	A 213 TP 321
8	Stem	1.4301	A 276 Grade 304
9	Gland packing	Graphite / PTFE / MICA	
10	Gland nut	1.4305	A 276 Grade 303
11	Handwheel	Aluminium alloy	
13	Bush	CW452K	B 159 UNS C51900

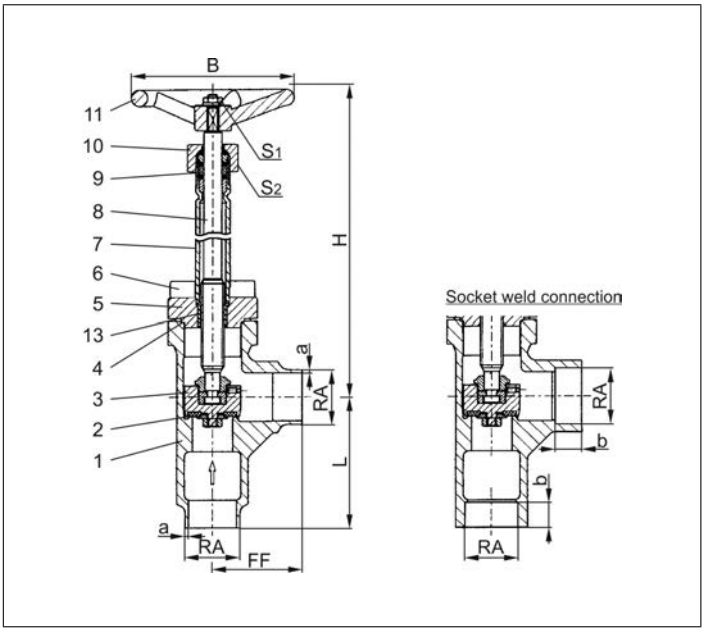

Type 01342 - Standard design	Technical data						
Nominal size	**DN**	**15**	**20**	**25**	**32**	**40**	**50**
Dimension code	.X.	1521	2026	2533	3242	4048	5060
Face-to-face dimension	FF	40	50	55	60	58	85
Height	H	270 mm or 370 mm					
Outside pipe-Ø ISO 1127	RA	21.3	26.9	33.7	42.0	48.3	60.3
Wall thickness pipe ISO 1127	a	2.0	2.0	2.0	2.0	2.0	2.0
Outside pipe-Ø ASTM A312	RA	21.34	26.67	33.4	-	48.26	60.33
Wall thickness pipe ASTM A312	a	dimensions acc. to S10 or S40					
Socket depth	b	10	13	13	13	13	16
Handwheel-Ø	B	100	100	100	125	125	125
Length	L	50	65	80	80	90	90
Wrench size across flats	S_1	7	7	7	10	10	10
Wrench size across flats	S_2	30	30	30	36	36	36
Weight	ca. kg	1.4	1.6	2.2	4.0	4.3	6.5
Kvs-Value	m^3/h	6.0	10.5	17.2	32.0	35.0	57.0
Cv-Value	gal/min	7.0	12.2	20.0	37.2	40.7	66.3

Dimensions in mm.

Gate Valves

Type 09340 - Gate Valve

Cryogenic-Gate Valves, PN50 (DN65=PN45)

Stainless steel body and topwork,
one way tightening (in flow direction),
" live loaded " gland packing
" cleaned and degreased for oxygen service "
Working pressure: 5 - 50 bar, Leakage rate A acc. to DIN EN 12266
Working pressure: 0.7 - 4.9 bar, Leakage rate B acc. to DIN EN 12266
Part No. 09340.X.001* (Height H for size DN25, DN40 und DN100)
Part No. 09340.X.002* (Height H for size DN50, DN65 und DN80)
* Butt weld connection for stainless steel pipes acc. to ISO 1127 or ASTM A312
Part No. 09340.X.0014 (Height H for size DN25, DN40 und DN100)
Part No. 09340.X.0024 (Height H for size DN50, DN65 und DN80)
Socket weld connection for stainless steel pipes acc. to ISO 1127 or ASTM A312

Available options - on request only:
· Further pipe wall thicknesses

Applications:
Approved for air gases, vapours and cryogenic liquefied gases incl. LNG.
Working temperature: -196°C / -321°F (77K) up to +120°C / +248°F (393K)

Materials		DIN EN	ASTM
1	Body	1.4308	A 351 CF8
2	Valve seal	PTFE / Carbon filled (25%)	
3	Disc	CW614N	B 283 UNS C38500
4	Wedge	1.4308	A 351 CF8
5	Stem	1.4301	A 276 Grade 304
6	Bonnet gasket	PTFE	
7	Headpiece	1.4308	A 351 CF8
8	Bolts	1.4301/A2	A 194 B8
9	Elongation tube	1.4541	A 213 TP 321
10	Gland packing	Graphite / PTFE / MICA	
11	Gland nut	1.4305	A 276 Grade 303
12	Handwheel	Aluminium alloy	
13	Bush	CW452K	B 159 UNS C51900

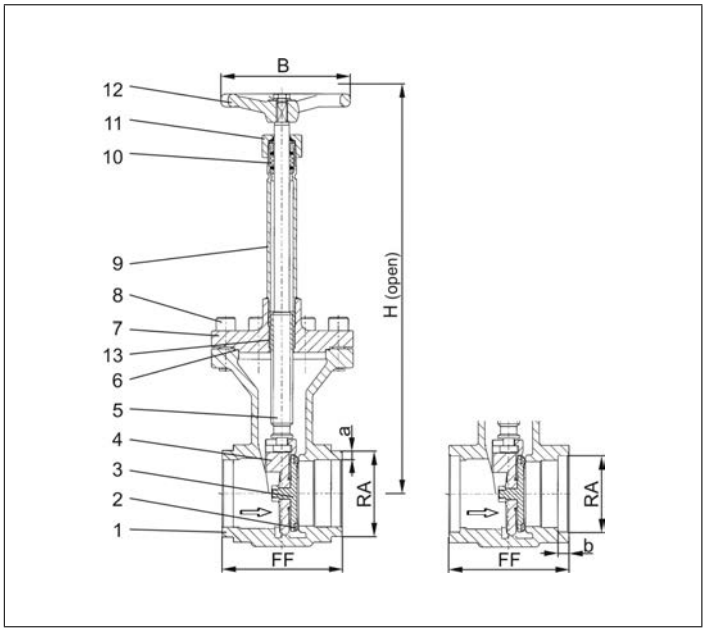

ASSOCIATION OF AMERICAN RAILROADS

Type 09340 - Standard design	Technical data						
Nominal size	**DN**	**25**	**40**	**50**	**65**	**80**	**100**
Dimension code	.X.	2533	4048	5060	657x	8088	0114
Face-to-face dimension	FF	133	133	110	110	110	130
Height	H	330	360	410	440	450	570
Outside pipe-Ø ISO 1127	RA	33.7	48.3	60.3	76.1	88.9	114.3
Wall thickness pipe ISO 1127	a	2.0	2.0	2.0	2.9	3.2	3.2
Outside pipe-Ø ASTM A312	RA	33.40	48.26	60.33	73.03	88.90	114.3
Wall thickness pipe ASTM A312	a	dimensions acc. to S10 or S40					
Socket depth	b	8	13	16	16	16	20
Handwheel-Ø	B	125	125	150	150	150	200
Weight	ca. kg	3.3	4.8	7.5	8.6	11.4	21.8
Kvs - Value	m^3/h	43	93	125	227	310	792
Cv - Value	gal/min	51	111	149	264	361	924

Dimensions in mm.

Edition 2022-11

Gate Valves

Type 09345 - Gate valve

Cryogenic-Gate Valves, PN50

Stainless steel body and topwork,
one way tightening (in flow direction),
" live loaded " gland packing
" cleaned and degreased for oxygen service "
Working pressure: 5 - 50 bar, Leakage rate A acc. to DIN EN 12266
Working pressure: 0.7 - 4.9 bar, Leakage rate B acc. to DIN EN 12266
Part No. 09345.X.0011*
Female thread connection (G) acc. to ISO 228/1
Part No. 09345.X.0015
Female thread connection (R) acc. to ISO 7-Rc
Part No. 09345.X.0016
Female thread connection (NPT) acc. to ANSI 1.20.1

Applications:
Approved for air gases, vapours and cryogenic liquefied gases incl. LNG.
Working temperature: -196°C / -321°F (77K) up to +120°C / +248°F (393K)

Materials		DIN EN	ASTM
1	Body	1.4308	A 351 CF8
2	Valve seal	PTFE / Carbon filled (25%)	
3	Disc	CW614N	B 283 UNS C38500
4	Wedge	1.4308	A 351 CF8
5	Stem	1.4301	A 276 Grade 304
6	Bonnet gasket	PTFE	
7	Headpiece	1.4308	A 351 CF8
8	Bolts	1.4301/A2	A 194 B8
9	Elongation tube	1.4541	A 213 TP 321
10	Gland packing	Graphite / PTFE / MICA	
11	Gland nut	1.4305	A 276 Grade 303
12	Handwheel	Aluminium alloy	
13	Bush	CW452K	B 159 UNS C51900

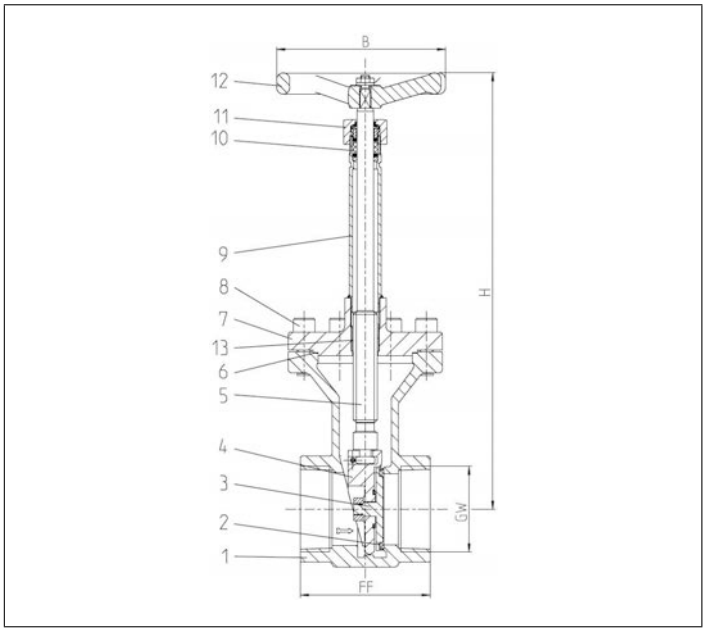

Type 09345 - Standard design	Technical data				
Nominal size	**DN**	**25**	**40**	**50**	**65**
Thread size	GW	1	1-1/2	2	2-1/2
Dimension code	.X.	1000	1400	2000	2400
Face-to-face dimension	FF	133	133	110	110
Height	H	330	360	410	440
Handwheel-Ø	B	125	125	150	150
Weight	ca. kg	3.3	4.8	7.5	8.6
Kvs - Value	m^3/h	43	93	125	227
Cv - Value	gal/min	51	111	149	264

Dimensions in mm.

Gate Valves

Type 09440 - Gate valve

Cryogenic-Gate Valves, PN50

Stainless steel body and topwork,
one way tightening (in flow direction),
" live loaded " gland packing
" cleaned and degreased for oxygen service "
Working pressure: 5 - 50 bar, Leakage rate A acc. to DIN EN 12266
Working pressure: 0.7 - 4.9 bar, Leakage rate B acc. to DIN EN 12266
Part No. 09440.X.0121
Male thread for union connection

Applications:
Approved for air gases, vapours and cryogenic liquefied gases incl. LNG.
Working temperature: -196°C / -321°F (77K) up to +120°C / +248°F (393K)

Materials		DIN EN	ASTM
1	Body	1.4308	A 351 CF8
2	Valve seal	PTFE / Carbon filled (25%)	
3	Disc	CW452K	B 159 UNS C51900
4	Wedge	1.4308	A 351 CF8
5	Stem	1.4301	A 276 Grade 304
6	Bonnet gasket	PTFE	
7	Headpiece	1.4301	A 276 Grade 304
8	Bolts	1.4301/A2	A 194 B8
9	Elongation tube	1.4541	A 213 TP 321
10	Gland packing	Graphite / PTFE / MICA	
11	Gland nut	1.4305	A 276 Grade 303
12	Handwheel	Aluminium alloy	
13	Bush	CW452K	B 159 UNS C51900

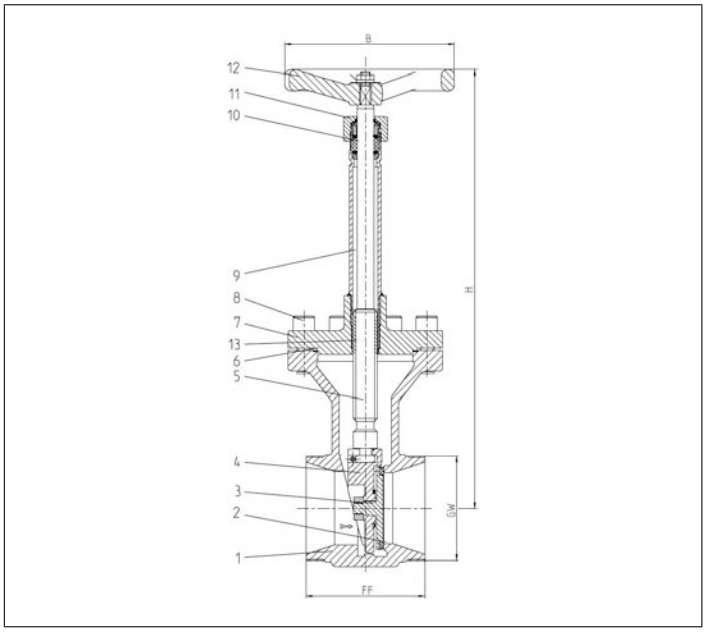

Type 09440 - Standard design	Technical data				
Nominal size	**DN**	**25**	**40**	**50**	**65**
Thread size (G- / M-thread)	GW	- / M40x2	G2 / M65x2	G2-1/2 / M78x2	G3 / M88x2
Dimension code	.X.	0250	0400	0500	0650
Face-to-face dimension	FF	133	133	110	100
Height	H	330	360	410	440
Handwheel-Ø	B	125	125	150	150
Weight	ca. kg	3.3	4.8	7.5	8.6
Kvs - Value	m^3/h	43	93	125	227
Cv - Value	gal/min	51	111	149	264

Dimensions in mm.

Edition 2022-11

Gate Valves

Type 09440 - Gate valve

Cryogenic-Gate Valves, PN50

Stainless steel body and topwork,
one way tightening (in flow direction),
" live loaded " gland packing
" cleaned and degreased for oxygen service "
Working pressure: 5 - 50 bar, Leakage rate A acc. to DIN EN 12266
Working pressure: 0.7 - 4.9 bar, Leakage rate B acc. to DIN EN 12266
Part No. 09440.X.002*
Completed with union type butt weld fittings for stainless steel pipes
acc.to ISO 1127 or ASTM A312

Available options - on request only:
· Further pipe wall thicknesses

Applications:
Approved for air gases, vapours and cryogenic liquefied gases incl. LNG.
Working temperature: -196°C / -321°F (77K) up to +120°C / +248°F (393K)

Materials		DIN EN	ASTM
1	Body	1.4308	A 351 CF8
2	Valve seal	PTFE / Carbon filled (25%)	
3	Disc	CW452K	B 159 UNS C51900
4	Wedge	1.4308	A 351 CF8
5	Stem	1.4301	A 276 Grade 304
6	Bonnet gasket	PTFE	
7	Headpiece	1.4301	A 276 Grade 304
8	Bolts	1.4301/A2	A 194 B8
9	Elongation tube	1.4541	A 213 TP 321
10	Gland packing	Graphite / PTFE / MICA	
11	Gland nut	1.4305	A 276 Grade 303
12	Handwheel	Aluminium alloy	
13	Bush	CW452K	B 159 UNS C51900
14	Weld fitting	1.4301	A 276 Grade 304
15	Union nut	1.4301	A 276 Grade 304

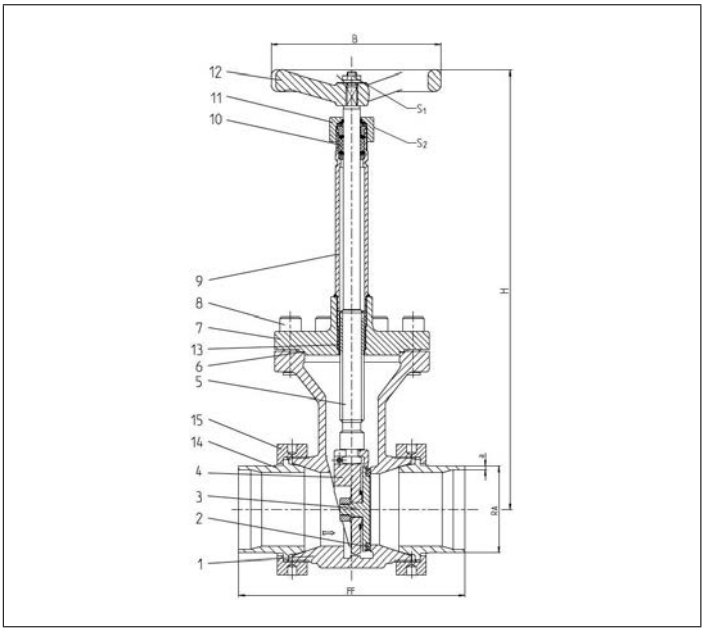

Type 09440 - Standard design	Technical data				
Nominal size	**DN**	**25**	**40**	**50**	**65**
Dimension code	.X.	2533	4048	5060	657x
Face-to-face dimension	FF	193	193	170	160
Height	H	330	360	410	440
Outsid pipe-Ø ISO 1127	RA	33.7	48.3	60.3	76.1
Wall thickness pipe ISO 1127	a	2.0	2.0	2.0	2.6
Outsid pipe-Ø ASTM A312	RA	33.40	48.26	60.33	73.03
Wall thickness pipe ASTM A312	a	dimensions acc. to S10 or S40			
Handwheel-Ø	B	125	125	150	150
Weight	ca. kg	3.5	5.1	7.8	9.0
Kvs - Value	m^3/h	43	93	125	227
Cv - Value	gal/min	51	111	149	264

Dimensions in mm.

Butterfly Valves

Type 17800 - Butterfly Valve

Cryogenic Butterfly Valves Buttweld Type, PN16

Manual operated with gear unit
Also available in PN10 and PN25
Type test approval acc. to DIN 12567 for LNG use
“ Fire safe ” type test approval acc. to EN ISO 10497

Available options - on request only:
· Further connection types
· Pressure range
· Accessories

Applications:
Approved for LNG Marine applications. Other applications on request only.
Working temperature: -196°C / -321°F (77K) up to +100°C / +212°F (373K)

Materials		DIN EN	ASTM
1	Gearbox	GG25 offshore painted	
2	Bracket	1.4404/1.4571	316L/316Ti
3	Flange	1.4404	316L
4	Gland packing	Graphite braid	
5	Gland packing	Graphite	
6	Gland packing	Graphite braid	
7	Body	1.4408	316
8	Disc	1.4408	316
9	Clamp ring	1.4404/1.4571	316L/316Ti
10	Seal	1.4571	316Ti
11	CSI ring	Inconel	
12	CSE ring	Inconel	
13	Shaft	1.4980/1.4571	-/316Ti

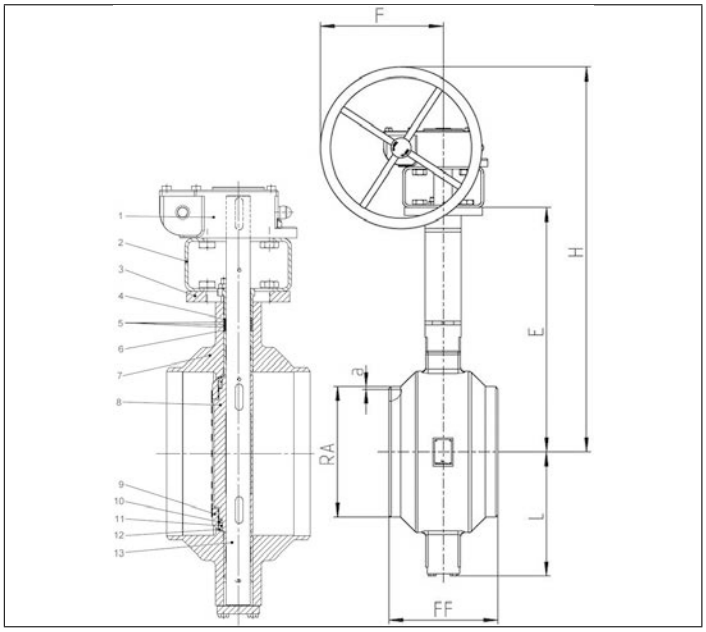

Type 17800 - Standard design	Technical data								
Nominal size	**DN**	**80**	**100**	**150**	**200**	**250**	**300**	**350**	**400**
Face-to-face dimension	FF	180	190	210	230	250	270	290	310
Max. Height (depending on PN)	H	622	676	780	891	983	1009	1130	1206
Outside pipe-Ø ISO 1127	RA	88.9	114.3	168.3	219.1	273.0	323.9	355.6	406.4
Wall thickness pipe ISO 1127	a	3.2	3.6	4.5	6.3	7.1	8.0	8.0	8.8
Outside pipe-Ø ASTM A312	RA	on request							
Wall thickness pipe ASTM A312	a	on request							
Length	E	428	462	503	540	579	605	625	685
Length	L	129	158	204	241	281	307	333	383
Length (depending on PN)	F	152	152	221	286	355	355	355	380
Max. Weight (depending on PN)	ca. kg	21.0	26.0	57.0	85.0	149.0	179.0	262.0	365.0
Kvs-Value	m^3/h	118	258	654	1443	2431	3720	5120	7321
Cv-Value	gal/min	137	300	760	1680	2850	4314	5953	8513

Dimensions in mm.

Edition 2022-11

Butterfly Valves

Type 17800 - Butterfly Valve, Top Entry

Cryogenic Butterfly Valves Top Entry Buttweld Type, PN16

Manual operated with gear unit
Also available in PN10 and PN25
Type test approval acc. to DIN 12567 for LNG use
“ Fire safe ” type test approval acc. to EN ISO 10497

Available options - on request only:
· Further connection types
· Pressure range
· Accessories

Applications:
Approved for LNG Marine applications. Other applications on request only.
Working temperature: -196°C / -321°F (77K) up to +100°C / +212°F (373K)

Materials		DIN EN	ASTM
1	Gearbox	GG25 offshore painted	
2	Bracket	1.4404/1.4571	316L/316Ti
3	Flange	1.4404	316L
4	Gland packing	Graphite braid	
5	Gland packing	Graphite	
6	Gland packing	Graphite braid	
7	Topwork	1.4408	316
8	CSI ring	Inconel	
9	Body	1.4408	316
10	Clamp ring	1.4404/1.4571	316L/316Ti
11	Disc	1.4408	316
12	Shaft	1.4980/1.4571	-/316Ti
13	Seal	1.4571	316Ti
14	CSI ring	Inconel	
15	CSE ring	Inconel	

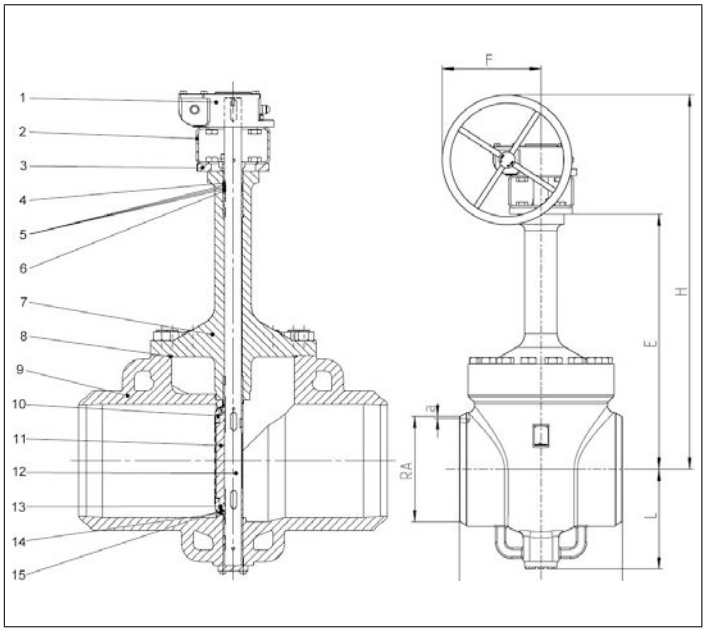

Type 17800 - Standard design	Technical data							
Nominal size	**DN**	**100**	**150**	**200**	**250**	**300**	**350**	**400**
Face-to-face dimension	FF	305	403	418	457	502	762	838
Max. Height (depending on PN)	H	876	980	1091	1183	1209	1330	1406
Outside pipe-Ø ISO 1127	RA	114.3	168.3	219.1	273.0	323.9	355.6	406.4
Wall thickness pipe ISO 1127	a	3.6	4.5	6.3	7.1	8.0	8.0	8.8
Outside pipe-Ø ASTM A312	RA	on request						
Wall thickness pipe ASTM A312	a	on request						
Length	E	662	703	740	779	805	825	885
Length	L	158	204	241	281	307	333	383
Length (depending on PN)	F	152	152	221	286	355	355	380
Max. Weight (depending on PN)	ca. kg	46.0	82.0	145.0	244.0	299.0	452.0	640.0
Kvs-Value	m^3/h	258	654	1443	2431	3720	5120	7321
Cv-Value	gal/min	300	760	1680	2850	4314	5953	8513

Dimensions in mm.

Fill Cluster

Type 07003 - Fill cluster with check function

Cryogenic-Fill cluster, PN50

Bronze body and topwork
with check function and drain valve
" live loaded " gland packing
“cleaned and degreased for oxygen service"

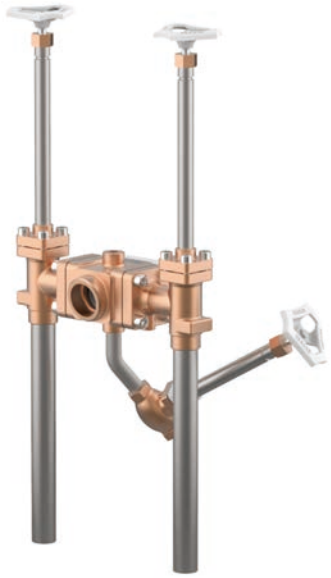

Part No. 07003.X.7027
Fill connection: Female thread type R (BSPT) acc. to ISO 7-Rc
Outlet: 2x complete with brazed stainless steel stubs acc. to ASTM A312
Non-return unit metal to metal seated, leakage rate D acc. to EN12266-1

Available options - on request only:
· brazed stainless steel stubs acc. to ISO 1127
· integrable strainer

Applications:
Approved for air gases, vapours and cryogenic liquefied gases incl. LNG.
Working temperature: -196°C / -321°F (77K) up to +120°C / +248°F (393K)

Materials		DIN EN	ASTM
1	Fill body	CC491K	B 62 UNS C83600
2	Body	CC491K	B 62 UNS C83600
3	Valve seal	PTFE / Carbon filled (25%)	
4	Disc	CW614N	B 283 UNS C38500
5	Bonnet gasket	PTFE	
6	Headpiece	CC493K	B 505 UNS C93200
7	Bolts	1.4301/A2	A 194 B8
8	Elongation tube	1.4541	A 213 TP 321
9	Stem	1.4301	A 276 Grade 304
10	Gland packing	Graphite / PTFE	
11	Gland nut	CW614N	B 283 UNS C38500
12	Handwheel	Aluminium alloy	
14	Check disc	CW452K	B 159 UNS C51900
15	Spring	1.4571	A 313 Grade 316Ti
16	Cap	CC491K	B 62 UNS C83600
17	Stainless steel stubs	1.4306	A 312 TP304L

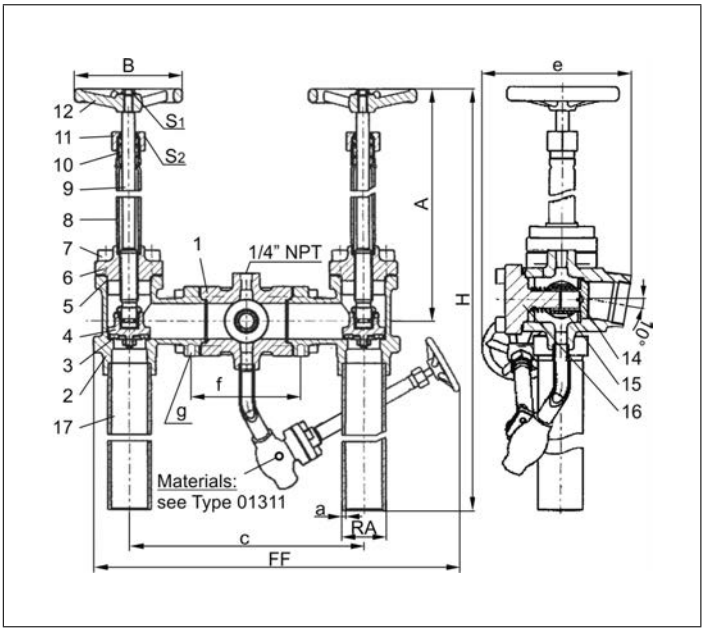

Type 07003 - Standard design	Technical data		
Nominal size	**DN**	**25**	**40**
Dimension code	.X.	2533	4048
Face-to-face dimension	FF	340	340
Outside pipe-Ø ASTM A312	RA	33.40	48.26
Wall thickness pipe ASTM A312	a	dimensions acc. to S10 or S40	
Height	A	370	370
Height	H	735	735
Length	c	260	260
Length	e	172	172
Length	f	125	125
Thread	g	M12, 11 mm deep	M12, 13 mm deep
Handwheel-Ø	B	100	125
Wrench size across flats	S_1	7	10
Wrench size across flats	S_2	30	36
Weight	ca. kg	14.4	18.4

Dimensions in mm.

Edition 2022-11

Fill Cluster

Type 07004 - Fill cluster with check function

Cryogenic-Fill cluster, PN50

Bronze body and topwork
with check function and drain valve
" live loaded " gland packing
“cleaned and degreased for oxygen service"

Part No. 07004.X.7027
Fill connection: Mueller flange
Outlet: 2x complete with brazed stainless steel stubs acc. to ASTM A312
Non-return unit metal to metal seated, leakage rate D acc. to EN12266-1

Available options - on request only:
· brazed stainless steel stubs acc. to ISO 1127
· integrable strainer

Applications:
Approved for air gases, vapours and cryogenic liquefied gases incl. LNG.
Working temperature: -196°C / -321°F (77K) up to +120°C / 248°F (393K)

Materials		DIN EN	ASTM
1	Fill body	CC491K	B 62 UNS C83600
2	Body	CC491K	B 62 UNS C83600
3	Valve seal	PTFE / Carbon filled (25%)	
4	Disc	CW614N	B 283 UNS C38500
5	Bonnet gasket	PTFE	
6	Headpiece	CC493K	B 505 UNS C93200
7	Bolts	1.4301/A2	A 194 B8
8	Elongation tube	1.4541	A 213 TP 321
9	Stem	1.4301	A 276 Grade 304
10	Gland packing	Graphite / PTFE	
11	Gland nut	CW614N	B 283 UNS C38500
12	Handwheel	Aluminium alloy	
14	Check disc	CW452K	B 159 UNS C51900
15	Spring	1.4571	A 313 Grade 316Ti
16	Cap	CC491K	B 62 UNS C83600
17	Stainless steel stubs	1.4306	A 312 TP304L

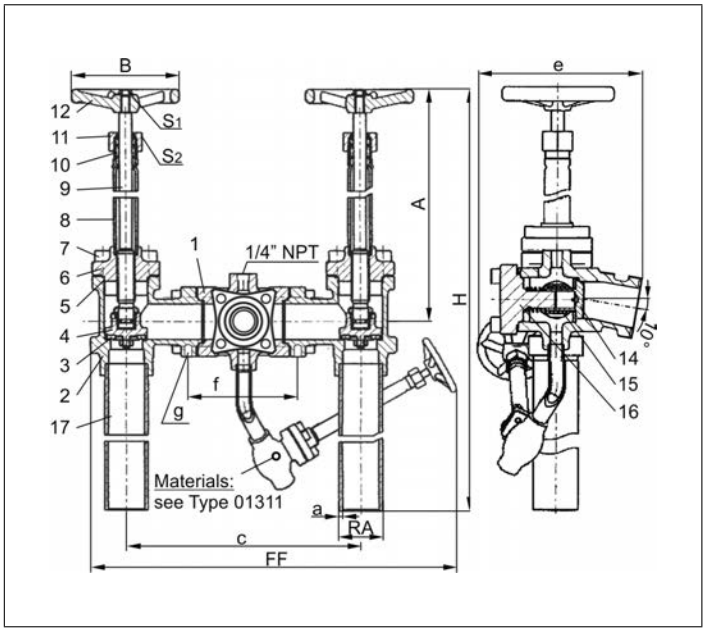

Type 07004 - Standard design	Technical data		
Nominal size	**DN**	**25**	**40**
Dimension code	.X.	2533	4048
Face-to-face dimension	FF	340	340
Outside pipe-Ø ASTM A312	RA	33.40	48.26
Wall thickness pipe ASTM A312	a	dimensions acc. to S10 or S40	
Height	A	370	370
Height	H	735	735
Length	c	260	260
Length	e	235	245
Length	f	125	125
Thread	g	M12, 11 mm deep	M12, 13 mm deep
Handwheel-Ø	B	100	125
Wrench size across flats	S_1	7	10
Wrench size across flats	S_2	30	36
Weight	ca. kg	15.4	19.4

Dimensions in mm.

Fill Cluster

Type 07013 - Fill cluster with check function

Cryogenic-Fill cluster, PN50

stainless steel body and bronze topwork
with check function and drain valve
" live loaded " gland packing
“cleaned and degreased for oxygen service"

Part No. 07013.X.5***
Fill connection: Female thread type R (BSPT) acc. to ISO 7-Rc
Outlet: 2x complete with brazed stainless steel stubs acc. to ASTM A312
Non-return unit metal to metal seated, leakage rate D acc. to EN12266-1

Available options - on request only:
· brazed stainless steel stubs acc. to ISO 1127
· integrable strainer

Applications:
Approved for air gases, vapours and cryogenic liquefied gases incl. LNG.
Working temperature: -196°C / -321°F (77K) up to +120°C / +248°F (393K)

Materials		DIN EN	ASTM
1	Fill body	1.4308	A 351 CF8
2	Body	1.4308	A 351 CF8
3	Valve seal	PTFE / Carbon filled (25%)	
4	Disc	CW614N	B 283 UNS C38500
5	Bonnet gasket	PTFE	
6	Headpiece	CC493K	B 505 UNS C93200
7	Bolts	1.4301/A2	A 194 B8
8	Elongation tube	1.4541	A 213 TP 321
9	Stem	1.4301	A 276 Grade 304
10	Gland packing	Graphite / PTFE	
11	Gland nut	CC493K	B 505 UNS C93200
12	Handwheel	Aluminium alloy	
13	Check disc	CW452K	B 159 UNS C51900
14	Spring	1.4571	A 313 Grade 316Ti
15	Cap	CC493K	B 505 UNS C93200
16	Stainless steel stubs	1.4306	A 312 TP304L

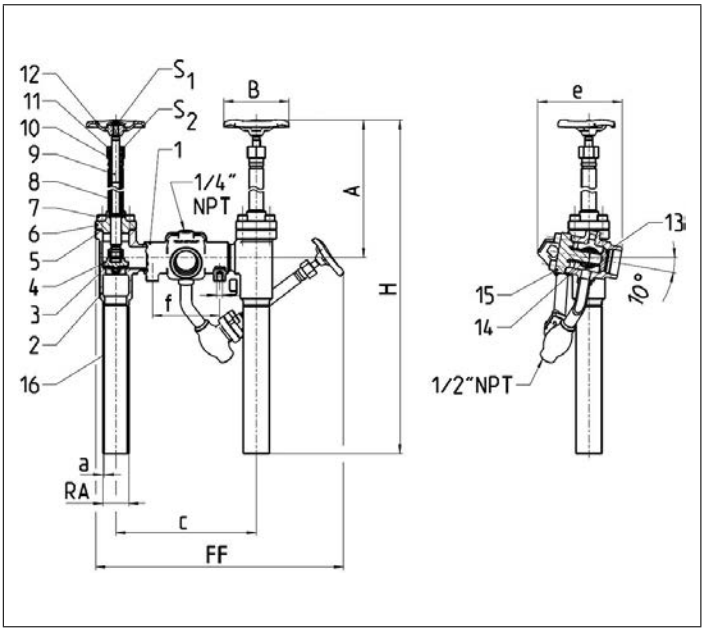

Type 07013 - Standard design	Technical data		
Nominal size	**DN**	**25**	**40**
Dimension code	.X.	2533	4048
Face-to-face dimension	FF	446	461
Outside pipe-Ø ASTM A312	RA	33.40	48.26
Wall thickness pipe ASTM A312	a	dimensions acc. to S10 or S40	
Height	A	370	370
Height	H	735	735
Length	c	260	260
Length	e	156	157
Length	f	125	125
Thread	g	M12, 11 mm deep	M12, 13 mm deep
Handwheel-Ø	B	100	125
Wrench size across flats	S_1	10	13
Wrench size across flats	S_2	27	32
Weight	ca. kg	11.3	15.4

Dimensions in mm.

Edition 2022-11

Fill Cluster

Type 07018 - Fill cluster with check function

Cryogenic-Fill cluster, PN50

Stainless steel body and bronze topwork
with check function and drain valve
" live loaded " gland packing
“ cleaned and degreased for oxygen service "

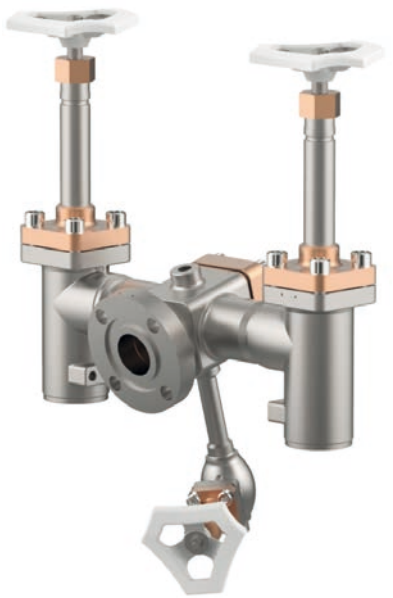

Part No. 07018.X.****
Fill connection: Mueller flange
Outlet: welded stainless steel stubs acc. to ASTM A312
Non-return unit metal to metal seated, leakage rate D acc. to EN12266-1

Available options - on request only:
· with strainer

Applications:
Approved for air gases, vapours and cryogenic liquefied gases incl. LNG.
Working temperature: -196°C / -321°F (77K) up to +120°C / +248°F (393K)

Materials		DIN EN	ASTM
1	Fill body	1.4308	A 351 CF8
2	Body	1.4308	A 351 CF8
3	Valve seal	PTFE / Carbon filled (25%)	
4	Disc	CW614N	B 283 UNS C38500
5	Bonnet gasket	PTFE	
6	Headpiece	CC493K	B 505 UNS C93200
7	Bolts	1.4301/A2	A 194 B8
8	Elongation tube	1.4541	A 213 TP 321
9	Stem	1.4301	A 276 Grade 304
10	Gland packing	Graphite / PTFE	
11	Gland nut	CC493K	B 505 UNS C93200
12	Handwheel	Aluminium alloy	

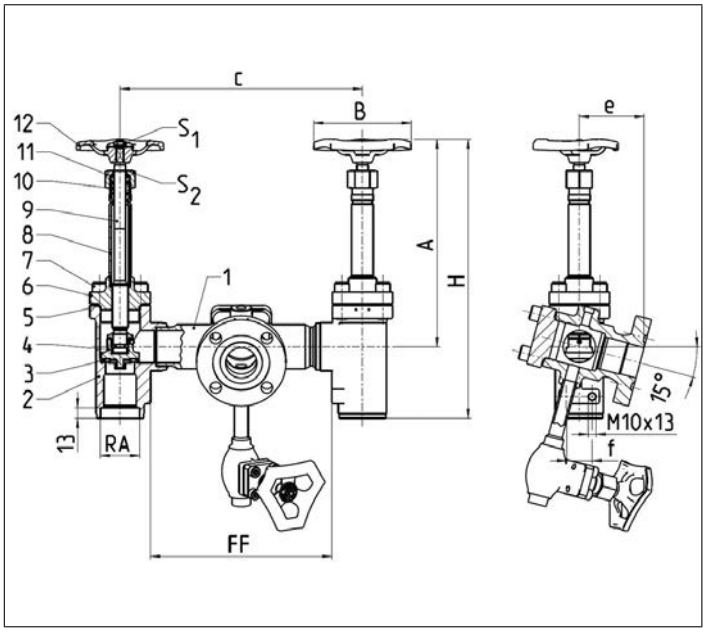

Type 07018 - Standard design	Technical data			
Nominal size	**DN**	**25**	**40**	**40**
Dimension code	.X.	2533	4045	4048
Face-to-face dimension	FF	225	225	225
Outside pipe-Ø ASTM A312	RA	33.7	45.4	48.3
Wall thickness pipe ASTM A312	a	dimensions acc. to S10 or S40		
Socket depth	b	13	13	13
Height	A	270	270	270
Height	H	735	735	735
Length	c	295	301	301
Length	e	82	82	82
Length	f	32	32	32
Handwheel-Ø	B	100	125	125
Wrench size across flats	S_1	10	13	13
Wrench size across flats	S_2	27	32	32
Weight	ca. kg	11.5	14.9	14.9

Dimensions in mm.

Fill Cluster

Type 07015 - Fill cluster

Cryogenic-Fill cluster, PN50

Stainless steel body and bronze topwork
" live loaded " gland packing
“ cleaned and degreased for oxygen service "

Part No. 07015.X.0000
Fill connection: Air Liquide specified flange
Socket weld connection for stainless steel pipes
acc. to ISO 1127 or ASTM A312

Available options - on request only:
· other fill connections
· integrable strainer

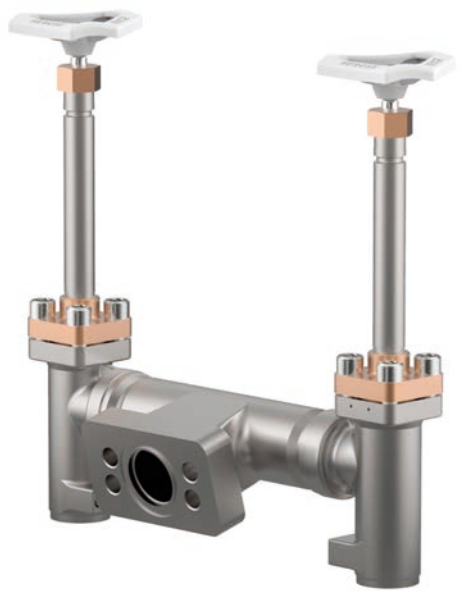

Applications:
Approved for air gases, vapours and cryogenic liquefied gases incl. LNG.
Working temperature: -196°C / -321°F (77K) up to +120°C / +248°F (393K)

Materials		DIN EN	ASTM
1	Fill body	1.4308	A 351 CF8
2	Body	1.4308	A 351 CF8
3	Valve seal	PTFE / Carbon filled (25%)	
4	Disc	CW614N	B 283 UNS C38500
5	Bonnet gasket	PTFE	
6	Headpiece	CC493K	B 505 UNS C93200
7	Bolts	1.4301/A2	A 194 B8
8	Elongation tube	1.4541	A 213 TP 321
9	Stem	1.4301	A 276 Grade 304
10	Gland packing	Graphite / PTFE	
11	Gland nut	CW614N	B 283 UNS C38500
12	Handwheel	Aluminium alloy	

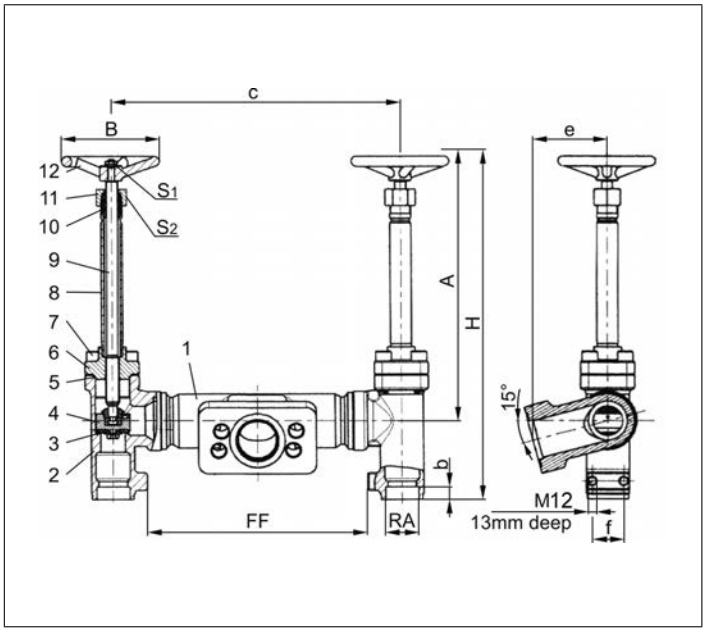

Type 07015 - Standard design	Technical data		
Nominal size	**DN**	**25**	**40**
Dimension code	.X.	2533	4048
Face-to-face dimension	FF	225	225
Outside pipe-Ø ISO 1127	RA	33.7	48.3
Outside pipe-Ø ASTM A312	RA	33.40	48.26
Socket depth	b	13	13
Height	A	270	270
Height	H	350	350
Length	c	295	301
Length	e	76	76
Length	f	32	32
Handwheel-Ø	B	100	125
Wrench size across flats	S_1	7	10
Wrench size across flats	S_2	30	36
Weight	ca. kg	8.4	11.2

Dimensions in mm.

Edition 2022-11

Fill Cluster

Type 07015 - Fill cluster with check function

Cryogenic-Fill cluster, PN50

Stainless steel body and bronze topwork
with check function and drain valve
" live loaded " gland packing
“ cleaned and degreased for oxygen service "

Part No. 07015.X.5000
Fill connection: Air Liquide specified flange
Socket weld connection for stainless steel pipes
acc. to ISO 1127 or ASTM A312
Non-return unit metal to metal seated, leakage rate D acc. to EN12266-1

Available options - on request only:
· other fill connections
· integrable strainer

Applications:
Approved for air gases, vapours and cryogenic liquefied gases incl. LNG.
Working temperature: -196°C / -321°F (77K) up to +120°C / +248°F (393K)

Materials		DIN EN	ASTM
1	Fill body	1.4308	A 351 CF8
2	Body	1.4308	A 351 CF8
3	Valve seal	PTFE / Carbon filled (25%)	
4	Disc	CW614N	B 283 UNS C38500
5	Bonnet gasket	PTFE	
6	Headpiece	CC493K	B 505 UNS C93200
7	Bolts	1.4301/A2	A 194 B8
8	Elongation tube	1.4541	A 213 TP 321
9	Stem	1.4301	A 276 Grade 304
10	Gland packing	Graphite / PTFE	
11	Gland nut	CW614N	B 283 UNS C38500
12	Handwheel	Aluminium alloy	
14	Check disc	CW452K	B 159 UNS C51900
15	Spring	1.4571	A 313 Grade 316Ti
16	Cap	CC493K	B 505 UNS C93200
17	Tube	1.4541	A 213 TP 321

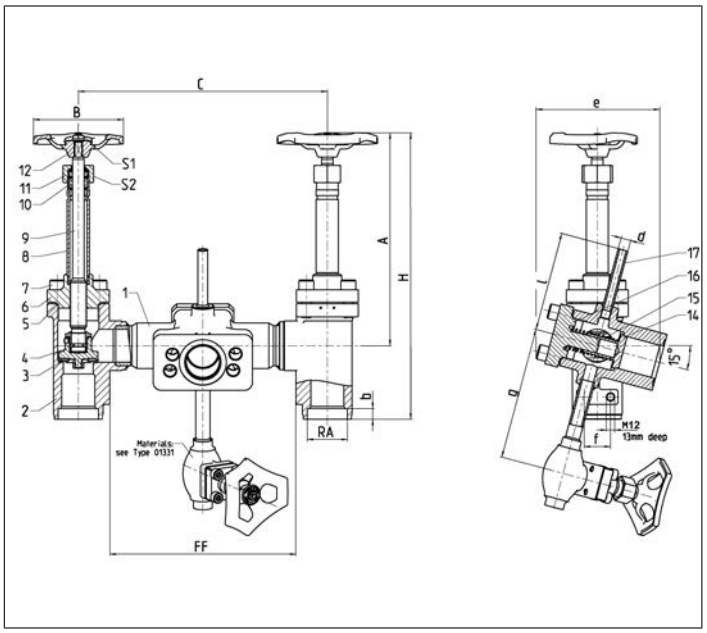

Type 07015 - Standard design	Technical data		
Nominal size	**DN**	**25**	**40**
Dimension code	.X.	2533	4048
Face-to-face dimension	FF	225	225
Outside pipe-Ø ISO 1127	RA	33.7	48.3
Outside pipe-Ø ASTM A312	RA	33.40	48.26
Socket depth	b	13	13
Height	A	270	270
Height	H	350	350
Length	c	295	301
Length	e	76	76
Length	f	32	32
Length	g	160	160
Length	l	120	120
Diameter	d	12x2	12x2
Handwheel-Ø	B	100	125
Wrench size across flats	S_1	7	10
Wrench size across flats	S_2	30	36
Weight	ca. kg	11.2	14.0

Dimensions in mm.

Fill Cluster

Type 07016 - Fill cluster with check function

Cryogenic-Fill cluster, PN50

Stainless steel body and bronze topwork
with check function and drain valve
" live loaded " gland packing
“ cleaned and degreased for oxygen service "

Part No. 07016.X.5000
Fill connection: Mueller flange
Outlet: welded stainless steel stubs acc. to ASTM A312
Non-return unit metal to metal seated, leakage rate D acc. to EN12266-1

Available options - on request only:
· with strainer

Applications:
Approved for air gases, vapours and cryogenic liquefied gases incl. LNG.
Working temperature: -196°C / -321°F (77K) up to +120°C / +248°F (393K)

Materials		DIN EN	ASTM
1	Fill body	1.4308	A 351 CF8
2	Body	1.4308	A 351 CF8
3	Valve seal	PTFE / Carbon filled (25%)	
4	Disc	CW614N	B 283 UNS C38500
5	Bonnet gasket	PTFE	
6	Headpiece	CC493K	B 505 UNS C93200
7	Bolts	1.4301/A2	A 194 B8
8	Elongation tube	1.4541	A 213 TP 321
9	Stem	1.4301	A 276 Grade 304
10	Gland packing	Graphite / PTFE	
11	Gland nut	CW614N	B 283 UNS C38500
12	Handwheel	Aluminium alloy	
14	Check disc	CW452K	B 159 UNS C51900
15	Spring	1.4571	A 313 Grade 316Ti
16	Cap	CC493K	B 505 UNS C93200
17	Pipe	1.4306	A 312 TP 304L

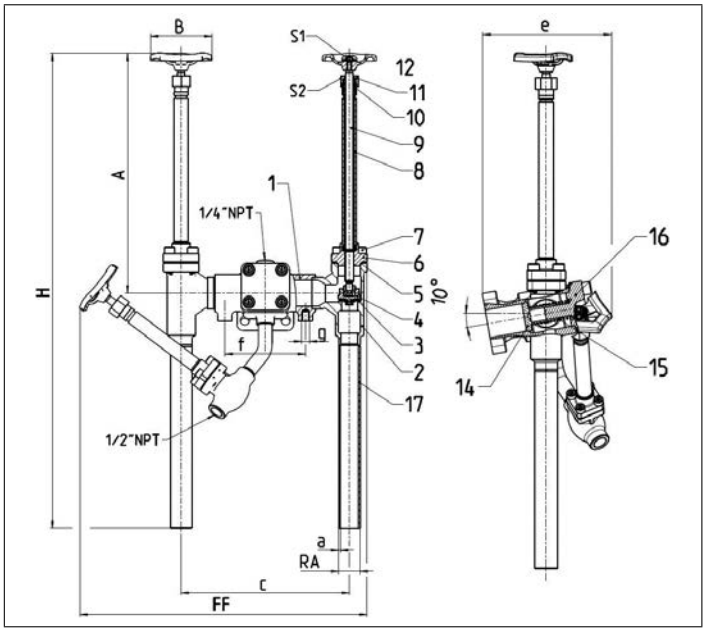

Type 07016 - Standard design	Technical data		
Nominal size	**DN**	**25**	**40**
Dimension code	.X.	2533	4048
Face-to-face dimension	FF	225	225
Outside pipe-Ø ASTM A312	RA	33.7	48.3
Wall thickness pipe ASTM A312	a	dimensions acc. to S10 or S40	
Socket depth	b	13	13
Height	A	370	370
Height	H	735	735
Length	c	295	301
Length	e	76	76
Length	f	125	125
Length	g	M12, 11mm deep	M12, 13mm deep
Handwheel-Ø	B	100	125
Wrench size across flats	S_1	7	10
Wrench size across flats	S_2	30	36
Weight	ca. kg	11.5	14.9

Dimensions in mm.

Edition 2022-11

Fill Cluster

Type 07012 - Fill cluster with check function

Cryogenic-Fill cluster, PN40

Stainless steel body and bronze topwork
with check function and drain valve
" live loaded " gland packing
“ cleaned and degreased for oxygen service "

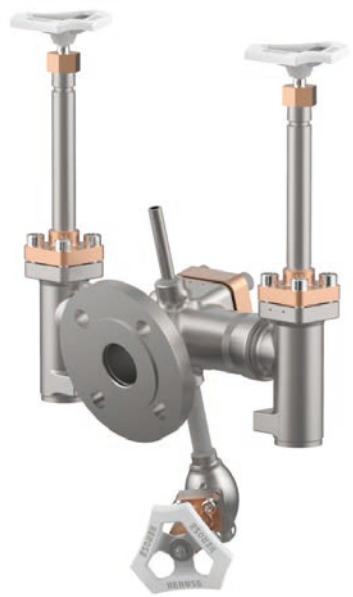

Part No. 07012.X.5000
Fill connection: Flange DN40 acc. to DIN EN 1092-1 PN40
Socket weld connection for stainless steel pipes
acc. to ISO 1127 or ASTM A312
Non-return unit metal to metal seated, leakage rate D acc. to EN12266-1

Available options - on request only:
· other fill connections
· integrable strainer

Applications:
Approved for air gases, vapours and cryogenic liquefied gases incl. LNG.
Working temperature: -196°C / -321°F (77K) up to +120°C / +248°F (393K)

Materials		DIN EN	ASTM
1	Fill body	1.4308	A 351 CF8
2	Body	1.4308	A 351 CF8
3	Valve seal	PTFE / Carbon filled (25%)	
4	Disc	CW614N	B 283 UNS C38500
5	Bonnet gasket	PTFE	
6	Headpiece	CC493K	B 505 UNS C93200
7	Bolts	1.4301/A2	A 194 B8
8	Elongation tube	1.4541	A 213 TP 321
9	Stem	1.4301	A 276 Grade 304
10	Gland packing	Graphite / PTFE	
11	Gland nut	CW614N	B 283 UNS C38500
12	Handwheel	Aluminium alloy	
14	Check disc	CW452K	B 159 UNS C51900
15	Spring	1.4571	A 313 Grade 316Ti
16	Cap	CC493K	B 505 UNS C93200
17	Tube	1.4541	A 213 TP 321

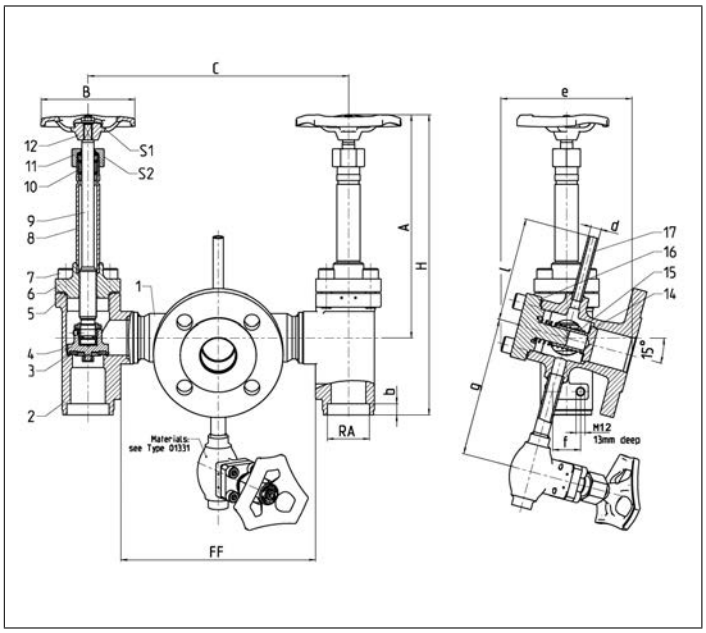

Type 07012 - Standard design	Technical data		
Nominal size	**DN**	**25**	**40**
Dimension code	.X.	2533	4048
Face-to-face dimension	FF	225	225
Outside pipe-Ø ISO 1127	RA	33.7	48.3
Outside pipe-Ø ASTM A312	RA	33.40	48.26
Socket depth	b	13	13
Height	A	270	270
Height	H	350	350
Length	c	295	301
Length	e	76	76
Length	f	32	32
Length	g	160	160
Length	l	120	120
Diameter	d	12x2	12x2
Handwheel-Ø	B	100	125
Wrench size across flats	S_1	7	10
Wrench size across flats	S_2	30	36
Weight	ca. kg	12.6	15.4

Dimensions in mm.

Fill Cluster

Type 07017 - Fill cluster

Cryogenic-Fill cluster, PN50

Stainless steel body and topwork
" live loaded " gland packing
“ cleaned and degreased for oxygen service "

Part No. 07017.X.0000
Fill connection: Air Liquide specified flange
Socket weld connection for stainless steel pipes
acc. to ISO 1127 or ASTM A312

Available options - on request only:
· other fill connections
· integrable strainer

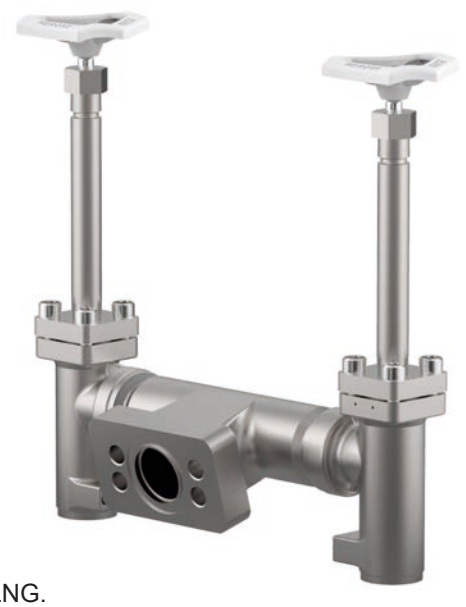

Applications:
Applications: Approved for air gases, vapours and cryogenic liquefied gases incl. LNG.
Working temperature: -196°C / -321°F (77K) up to +120°C / +248°F (393K)

Materials		DIN EN	ASTM
1	Fill body	1.4308	A 351 CF8
2	Body	1.4308	A 351 CF8
3	Valve seal	PTFE / Carbon filled (25%)	
4	Disc	1.4301	A 276 Grade 304
5	Bonnet gasket	PTFE	
6	Headpiece	1.4308	A 351 CF8
7	Bolts	1.4301/A2	A 194 B8
8	Elongation tube	1.4541	A 213 TP 321
9	Stem	1.4301	A 276 Grade 304
10	Gland packing	Graphite / PTFE / MICA	
11	Gland nut	1.4305	A 276 Grade 303
12	Handwheel	Aluminium alloy	
13	Bush	CW452K	B 159 UNS C51900

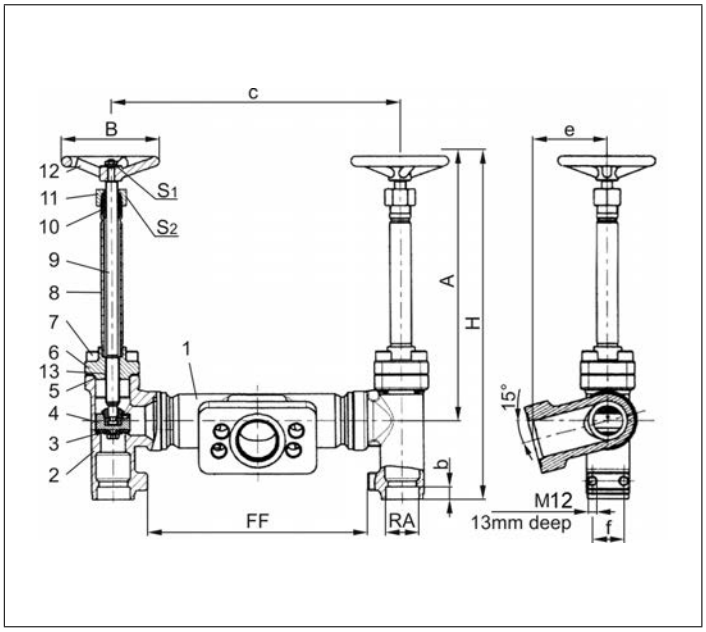

Type 07017 - Standard design	Technical data		
Nominal size	**DN**	**25**	**40**
Dimension code	.X.	2533	4048
Face-to-face dimension	FF	225	225
Outside pipe-Ø ISO 1127	RA	33.7	48.3
Outside pipe-Ø ASTM A312	RA	33.40	48.26
Socket depth	b	13	13
Height	A	270	270
Height	H	350	350
Length	c	295	301
Length	e	76	76
Length	f	32	32
Handwheel-Ø	B	100	125
Wrench size across flats	S_1	7	10
Wrench size across flats	S_2	30	36
Weight	ca. kg	8.4	11.2

Dimensions in mm.

Edition 2022-11

Fill Cluster

Type 07017 - Fill cluster with check function

Cryogenic-Fill cluster, PN50

Stainless steel body and topwork
with check function and drain valve
" live loaded " gland packing
“ cleaned and degreased for oxygen service "

Part No. 07017.X.5000
Fill connection: Air Liquide specified flange
Socket weld connection for stainless steel pipes
acc. to ISO 1127 or ASTM A312
Non-return unit metal to metal seated, leakage rate D acc. to EN12266-1

Available options - on request only:
· other fill connections
· integrable strainer

Applications:
Applications: Approved for air gases, vapours and cryogenic liquefied gases incl. LNG.
Working temperature: -196°C / -321°F (77K) up to +120°C / +248°F (393K)

Materials		DIN EN	ASTM
1	Fill body	1.4308	A 351 CF8
2	Body	1.4308	A 351 CF8
3	Valve seal	PTFE / Carbon filled (25%)	
4	Disc	1.4301	A 276 Grade 304
5	Bonnet gasket	PTFE	
6	Headpiece	1.4308	A 351 CF8
7	Bolts	1.4301/A2	A 194 B8
8	Elongation tube	1.4541	A 213 TP 321
9	Stem	1.4301	A 276 Grade 304
10	Gland packing	Graphite / PTFE / MICA	
11	Gland nut	1.4305	A 276 Grade 303
12	Handwheel	Aluminium alloy	
13	Bush	CW452K	B 159 UNS C51900
14	Check disc	1.4301	A 276 Grade 304
15	Spring	1.4571	A 313 Grade 316Ti
16	Cap	1.4301	A 276 Grade 304
17	Tube	1.4541	A 213 TP 321

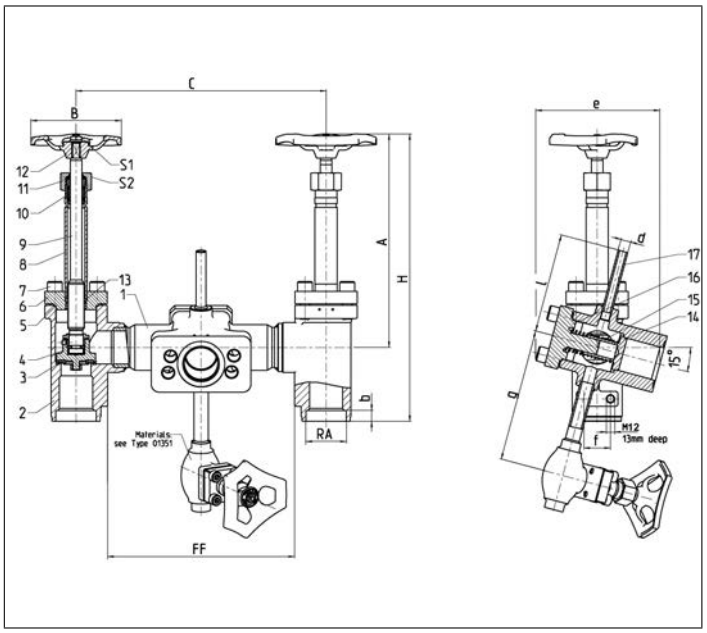

Type 07017 - Standard design	Technical data		
Nominal size	**DN**	**25**	**40**
Dimension code	.X.	2533	4048
Face-to-face dimension	FF	225	225
Outside pipe-Ø ISO 1127	RA	33.7	48.3
Outside pipe-Ø ASTM A312	RA	33.40	48.26
Socket depth	b	13	13
Height	A	270	270
Height	H	350	350
Length	c	295	301
Length	e	76	76
Length	f	32	32
Length	g	160	160
Length	l	120	120
Diameter	d	12x2	12x2
Handwheel-Ø	B	100	125
Wrench size across flats	S_1	7	10
Wrench size across flats	S_2	30	36
Weight	ca. kg	11.2	14.0

Dimensions in mm.

Edition 2022-11

Phone: +49 4531 509-0

Fill Cluster

Type 070XX - Flow rate Fill Cluster

Flow rates of the Fill Cluster

Typ 070XX - Standard design	Technical data		
Nominal size	**DN**	**25**	**40**
Kvs-Value both-sided open	m^3/h	36.5	60.0
Kvs-Value one-sided open	m^3/h	18.0	33.0
Kvs-Value both-sided open with check function	m^3/h	32.5	50.5
Kvs-Value one-sided open with check function	m^3/h	17.0	29.0
Kvs-Value both-sided open with screen	m^3/h	27.0	37.0
Kvs-Value one-sided open with screen	m^3/h	13.5	18.5
Kvs-Value both-sided open with check function and screen	m^3/h	21.0	27.0
Kvs-Value one-sided open with check function and screen	m^3/h	12.5	15.5
Cv-Value both-sided open	gal/min	42.0	69.5
Cv-Value one-sided open	gal/min	21.0	38.5
Cv-Value both-sided open with check function	gal/min	38.0	58.5
Cv-Value one-sided open with check function	gal/min	20.0	33.5
Cv-Value both-sided open with screen	gal/min	31.0	43.0
Cv-Value one-sided open with screen	gal/min	15.5	21.5
Cv-Value both-sided open with check function and screen	gal/min	24.0	31.0
Cv-Value one-sided open with check function and screen	gal/min	14.5	18.0

Spare Parts for Valves and Fill Cluster

Type 28203 - Disc complete

for Cryogenic-Globe Valves
brass disc CW614N
" cleaned and degreased for oxygen service "

Part No. 28203.X.0000

suitable for:

Type	Nominal size
01301, 01311	DN10 - DN50
01305, 01315, 02401, 02411	DN10 - DN50
01331	DN10 - DN100
01321	DN10 - DN150
01332, 01322	DN10 - DN50
01335, 01325	DN10 - DN50
03331, 03321	DN25 - DN150

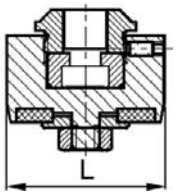

Type 28203.X.0000	Technical data											
Nominal size	**DN**	**10**	**15**	**20**	**25**	**32**	**40**	**50**	**65**	**80**	**100**	**150**
Dimension code	.X.	0100	0150	0200	0250	0320	0400	0500	0650	0800	1000	1500
Disc Ø	L	23	25	30	34.5	42	47	55	73	86	104	155
Weight	ca. kg	0.05	0.06	0.09	0.12	0.18	0.22	0.30	0.55	0.75	1.05	3.10

Dimensions in mm.

for Cryogenic-Globe Valves
stainless steel disc 1.4301
" cleaned and degreased for oxygen service "

Part No. 28203.X.0765

suitable for:

Type	Nominal size
01351	DN10 - DN150
01341, 01343	DN10 - DN200
03341, 03343	DN15 - DN200
01352, 01342	DN15 - DN50
01355, 01345	DN10 - DN50
03351	DN15 - DN150
01353	DN20 - DN80
01420	DN15 - DN100
01423	DN25 - DN100

Part No. 28203.X.A76*
suitable for:

Type	Nominal size
01420	DN10
01423	DN10 - DN20

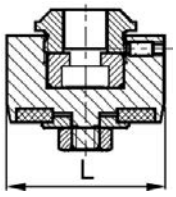

Type 28203.X.*76*	Technical data												
Nominal size	**DN**	**10**	**15**	**20**	**25**	**32**	**40**	**50**	**65**	**80**	**100**	**150**	**200**
Dimension code	.X.	0100	0150	0200	0250	0320	0400	0500	0650	0800	1000	1500	2000
Disc Ø	L	23	25	30	34.5	42	47	55	73	86	104	155	217
Weight	ca. kg	0.05	0.06	0.09	0.12	0.18	0.22	0.30	0.55	0.75	1.05	3.10	9.28

Dimensions in mm.

Spare Parts for Valves and Fill Cluster

Type 28203, Type 28205 - Check Disc complete

for Cryogenic-Globe/Check Valves
brass check disc CW614N
" cleaned and degreased for oxygen service "

Part No. 28203.X.5000

suitable for:

Type	Nominal size
01301, 01311	DN10 - DN50
01305, 01315, 02401, 02411	DN10 - DN50
01331	DN10 - DN100
01321	DN10 - DN150
01332, 01322, 01335, 01325	DN10 - DN50
03331, 03321	DN25 - DN150

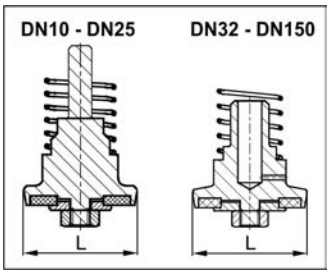

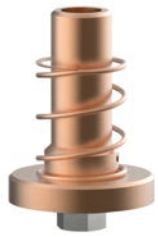

Type 28203.X.5000	Technical data											
Nominal size	**DN**	**10**	**15**	**20**	**25**	**32**	**40**	**50**	**65**	**80**	**100**	**150**
Dimension code	.X.	0100	0150	0200	0250	0320	0400	0500	0650	0800	1000	1500
Disc Ø	L	23	25	30	34.5	42	47	55	73	86	104	155
Weight	ca. kg	0.05	0.07	0.09	0.10	0.15	0.20	0.34	0.48	0.66	1.05	3.28

Dimensions in mm.

for Cryogenic-Globe/Check Valves
stainless steel check disc 1.4301
" cleaned and degreased for oxygen service "

Part No. 28205.X.5000

suitable for:

Type	Nominal size
01351	DN10 - DN150
01341, 01343	DN10 - DN200
01352, 01342	DN15 - DN50
01355, 01345	DN10 - DN50
03351	DN15 - DN150
03341, 03343	DN15 - DN200

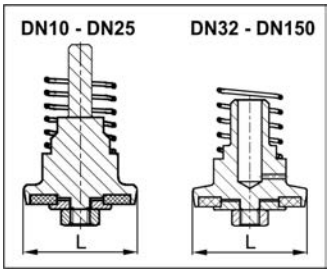

Type 28205.X.5000	Technical data												
Nominal size	**DN**	**10**	**15**	**20**	**25**	**32**	**40**	**50**	**65**	**80**	**100**	**150**	**200**
Dimension code	.X.	0100	0150	0200	0250	0320	0400	0500	0650	0800	1000	1500	2000
Disc Ø	L	23	25	30	34.5	42	47	55	73	86	104	155	217
Weight	ca. kg	0.05	0.07	0.09	0.10	0.15	0.20	0.34	0.48	0.66	1.05	3.28	9.28

Dimensions in mm.

Spare Parts for Valves and Fill Cluster
Type 29240 - Disc complete

for Cryogenic-Gate Valves

brass disc CW452K
" cleaned and degreased for oxygen service "

consisting of:
1 x Disc complete (incl. disc seal PTFE/Carbon filled (25%))
1 x Spring ring
1 x Disc nut self locking

Part No. 29240.X.0000

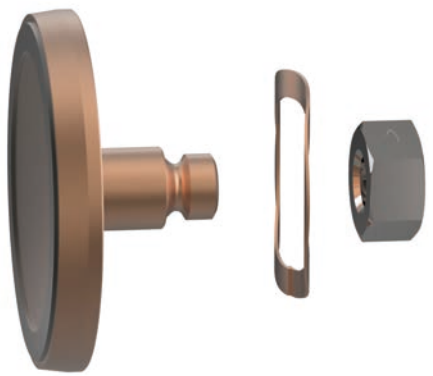

suitable for:

Type	Nominal size
09340, 09343	DN25 - DN100
09345, 09440, 09443	DN25 - DN65

Materials		DIN EN	ASTM
1	Disc	CW614N	B 283 UNS C38500
2	Spring ring	1.4568	UNS 631
3	Nut	1.4301/A2	A 194 B8
4	Valve seal	PTFE / Carbon filled (25%)	

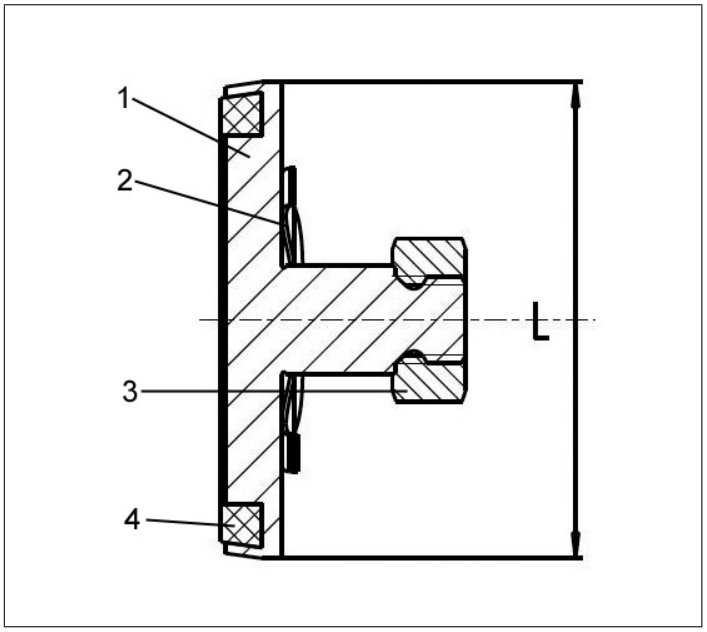

Type 29240	Technical data						
Nominal size	**DN**	**25**	**40**	**50**	**65**	**80**	**100**
Dimension code	.X.	0250	0400	0500	0650	0800	1000
Disc-Ø	L	34	44	55	70	78	107
Weight	ca. kg	0.05	0.08	0.15	0.18	0.20	0.56

Dimensions in mm.

Spare Parts for Valves and Fill Cluster
Type 29256 - Wedge complete

for Cryogenic-Gate Valves

" cleaned and degreased for oxygen service "

consisting of:
1 x Wedge
1 x Disc complete (incl. disc seal PTFE/Carbon filled (25%))
1 x Spring ring
1 x Disc nut self locking
1 x bearing bolt

Part No. 29256.X.0000

suitable for:

Type	Nominal size
09340, 09343	DN25 - DN100
09345, 09440, 09443	DN25 - DN65

Materials		DIN EN	ASTM
1	Wedge	1.4308	A 351 CF8
2	Disc	CW452K	B 159 UNS C51900
3	Spring ring	1.4568	UNS 631
4	Nut	1.4301/A2	A 194 B8
5	Valve seal	PTFE / Carbon filled (25%)	
6	Bearing bolt	1.4301	A 276 Grade 304

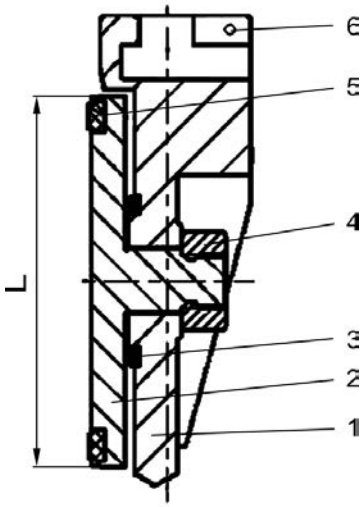

Type 29256	Technical data						
Nominal size	**DN**	**25**	**40**	**50**	**65**	**80**	**100**
Dimension code	.X.	0250	0400	0500	0650	0800	1000
Disc-Ø	L	34	45	55	70	78	108
Weight	ca. kg	0.21	0.33	0.57	0.74	1.06	2.13

Dimensions in mm.

Edition 2022-11

Spare Parts for Valves and Fill Cluster
Type 28301 - Topwork

for Cryogenic-Globe and Globe/Check Valves

Bronze topwork
" live loaded " gland packing
" cleaned and degreased for oxygen service "

Part No. 28301.X.0000
Part No. 28301.X.5000 with check function

suitable for:

Type	Nominal size
01301, 01305, 02401	DN10 - DN50
01331	DN10 - DN100
01335	DN10 - DN50
03331	DN25 - DN150

Materials		DIN EN	ASTM
1	Valve seal	PTFE / Carbon filled (25%)	
2	Disc	CW614N	B 283 UNS C38500
3	Bonnet gasket	PTFE	
4	Headpiece	CC493K	B 505 UNS C93200
5	Bolts	1.4301/A2	A 194 B8
6	Stem	1.4301	A 276 Grade 304
7	Gland packing	Graphite / PTFE	
8	Gland nut	CW614N	B 283 UNS C38500
9	Handwheel	Aluminium alloy	
10	Spring	CW452K	B 159 UNS C51900

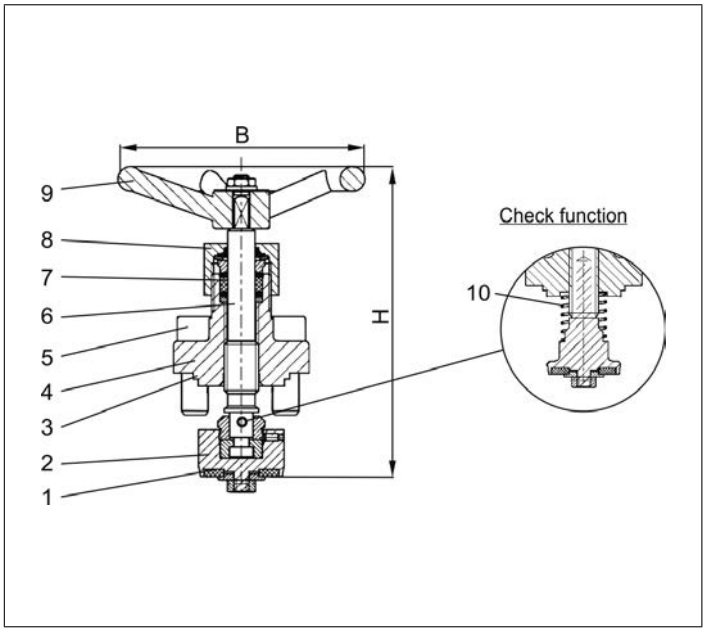

Type 28301	Technical data											
Nominal size	**DN**	**10**	**15**	**20**	**25**	**32**	**40**	**50**	**65**	**80**	**100**	**150**
Dimension code	.X.	0100	0150	0200	0250	0320	0400	0500	0650	0800	1000	1500
Height	H	130	130	130	130	155	160	185	240	285	320	380
Number of bolts		4	4	4	4	4	4	6	6	6	6	12
Handwheel-Ø	B	100	100	100	100	125	125	125	200	250	315	360
Weight	ca. kg	0.6	0.7	0.95	1.0	1.5	1.9	2.7	4.8	5.9	8.4	18.0

Dimensions in mm.

Spare Parts for Valves and Fill Cluster
Type 28351 - Topwork

for Cryogenic-Globe and Globe/Check Valves

Stainless steel topwork,
" live loaded " gland packing
" cleaned and degreased for oxygen service "

Part No. 28351.X.0000
Part No. 28351.X.5000 with check function

suitable for:

Type	Nominal size
01351	DN10 - DN100
01355	DN10 - DN50
03351	DN25 - DN150

Materials		DIN EN	ASTM
1	Valve seal	PTFE / Carbon filled (25%)	
2	Disc	1.4301	A 276 Grade 304
3	Bonnet gasket	PTFE	
4	Headpiece	1.4301 / 1.4308	A 276 Grade 304 / A 351 CF8
5	Bolts	1.4301/A2	A 194 B8
6	Stem	1.4301	A 276 Grade 304
7	Gland packing	Graphite / PTFE	
8	Gland nut	1.4305	A 276 Grade 303
9	Handwheel	Aluminium alloy	
10	Spring	1.4310	A 313 Grade 301
11	Bush	CW452K	B 159 UNS C51900

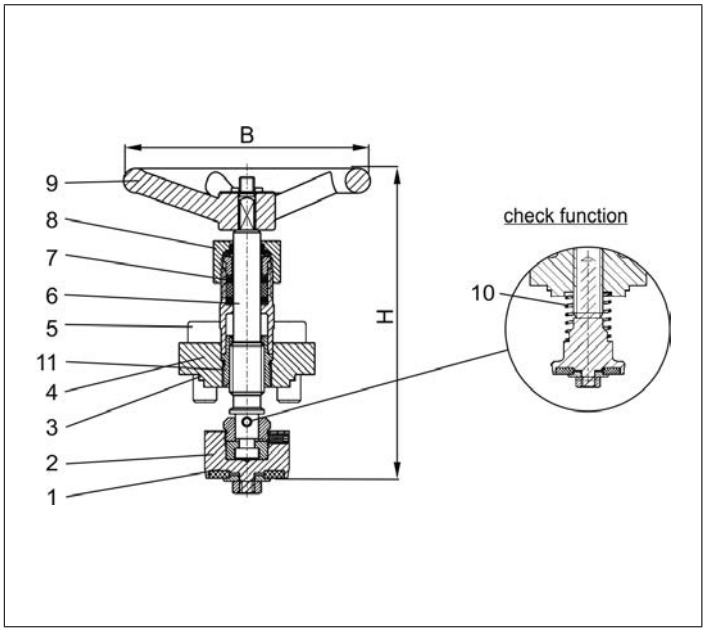

Type 28351	Technical data											
Nominal size	**DN**	**10**	**15**	**20**	**25**	**32**	**40**	**50**	**65**	**80**	**100**	**150**
Dimension code	.X.	0100	0150	0200	0250	0320	0400	0500	0650	0800	1000	1500
Height	H	130	130	130	130	155	160	185	240	285	320	380
Number of bolts		4	4	4	4	4	4	6	6	6	6	12
Handwheel-Ø	B	100	100	100	100	125	125	125	200	250	315	360
Weight	ca. kg	0.6	0.7	0.95	1.0	1.5	1.9	2.7	4.8	5.9	8.4	18.0

Dimensions in mm.

Edition 2022-11

Spare Parts for Valves and Fill Cluster
Type 28311 - Topwork

for Cryogenic-Globe and Globe/Check Valves

Bronze topwork
" live loaded " gland packing
" cleaned and degreased for oxygen service "

Part No. 28311.X.0010 (H=270mm)
Part No. 28311.X.0020 (H=370mm)

Part No. 28311.X.5010 (H=270mm) with check function
Part No. 28311.X.5020 (H=370mm) with check function

suitable for:

Type	Nominal size
01311, 01315, 02411	DN10 - DN50
01321	DN10 - DN150
01325	DN10 - DN50
03321	DN25 - DN150
07003 - only drain valve	DN15
07004 - only drain valve	DN15

Materials		DIN EN	ASTM
1	Valve seal	PTFE / Carbon filled (25%)	
2	Disc	CW614N	B 283 UNS C38500
3	Bonnet gasket	PTFE	
4	Headpiece	CC493K	B 505 UNS C93200
5	Bolts	1.4301/A2	A 194 B8
6	Elongation tube	1.4541	A 213 TP 321
7	Stem	1.4301	A 276 Grade 304
8	Gland packing	Graphite / PTFE	
9	Gland nut	CW614N	B 283 UNS C38500
10	Handwheel	Aluminium alloy	
11	Spring	CW452K	B 159 UNS C51900

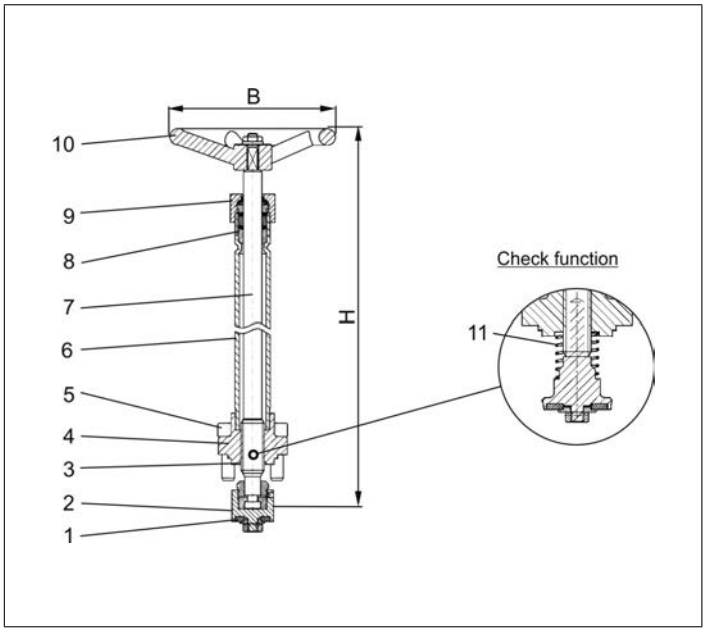

Type 28311	Technical data											
Nominal size	**DN**	**10**	**15**	**20**	**25**	**32**	**40**	**50**	**65**	**80**	**100**	**150**
Dimension code	.X.	0100	0150	0200	0250	0320	0400	0500	0650	0800	1000	1500
Height	H	270 mm or 370 mm							370	370	370	420
Number of bolts		4	4	4	4	4	4	6	6	6	6	6
Handwheel-Ø	B	100	100	100	100	125	125	125	200	250	315	350
Weight	ca. kg	1.0	1.1	1.4	1.4	2.0	2.4	3.0	5.5	6.8	9.5	18.4

Dimensions in mm.

Spare Parts for Valves and Fill Cluster
Type 28341 - Topwork

for Cryogenic-Globe and Globe/Check Valves

Stainless steel topwork,
" live loaded " gland packing
" cleaned and degreased for oxygen service "

Part No. 28341.X.0010 (H=270mm)
Part No. 28341.X.0020 (H=370mm)

Part No. 28341.X.5010 (H=270mm) with check function
Part No. 28341.X.5020 (H=370mm) with check function

suitable for:

Type	Nominal size
01341	DN10 - DN200
01345	DN10 - DN50
03341	DN25 - DN150

Materials		DIN EN	ASTM
1	Valve seal	PTFE / Carbon filled (25%)	
2	Disc	1.4301	A 276 Grade 304
3	Bonnet gasket	PTFE	
4	Headpiece	1.4301 / 1.4308	A 276 Grade 304 / A 351 CF8
5	Bolts	1.4301/A2	A 194 B8
6	Elongation tube	1.4541	A 213 TP 321
7	Stem	1.4301	A 276 Grade 304
8	Gland packing	Graphite / PTFE	
9	Gland nut	1.4305	A 276 Grade 303
10	Handwheel	Aluminium alloy	
11	Spring	1.4310	A 313 Grade 301
12	Bush	CW452K	B 159 UNS C51900

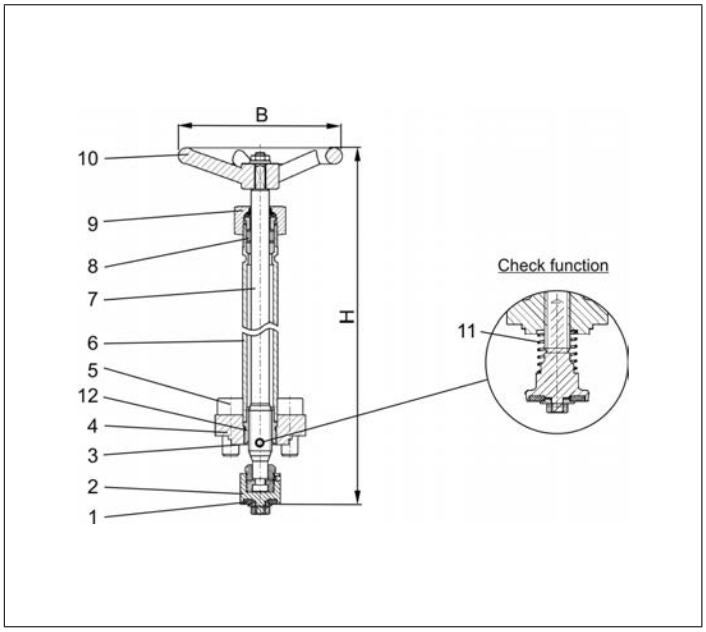

Type 28341	Technical data												
Nominal size	**DN**	**10**	**15**	**20**	**25**	**32**	**40**	**50**	**65**	**80**	**100**	**150**	**200**
Dimension code	.X.	0100	0150	0200	0250	0320	0400	0500	0650	0800	1000	1500	2000
Height	H	270 mm or 370 mm							370	370	370	420	560
Number of bolts		4	4	4	4	4	4	6	6	6	6	6	12
Handwheel-Ø	B	100	100	100	100	125	125	125	200	250	315	350	630
Weight	ca. kg	1.0	1.1	1.4	1.4	2.0	2.4	3.0	5.5	6.8	9.5	18.4	56.8

Dimensions in mm.

Edition 2022-11

Spare Parts for Valves and Fill Cluster
Type 01950 - Topwork

for Liquid Cylinder Valves

" cleaned and degreased for oxygen service "

Part No. 01950.XXXX.EXXXXX

Handwheel colors: green, blue or grey

Available options - on request only:
· Printed hub cap with customised design
· Additional handhweel color

Materials		DIN EN	ASTM
1	Bonnet	CW614N	B 283 UNS C38500
2	Gasket	Copper	
3	Stem seal gasket	PTFE	
4	Upper stem	CW614N	B 283 UNS C38500
5	Lower spindle	CW614N	B 283 UNS C38500
6	Disc	PCTFE	
7	V packing	PTFE	
8	Gland packing	PTFE	
9	Top washer	PTFE	
10	Handwheel	C.Alum. + P.C.	
11	Disc washer	1.4301	A 276 Grade 304
12	Flat washer	1.4301	A 276 Grade 304
13	Hub cap	Mild steel zinc plated + powder coating	
14	Nyloc nut	1.4301	A 276 Grade 304

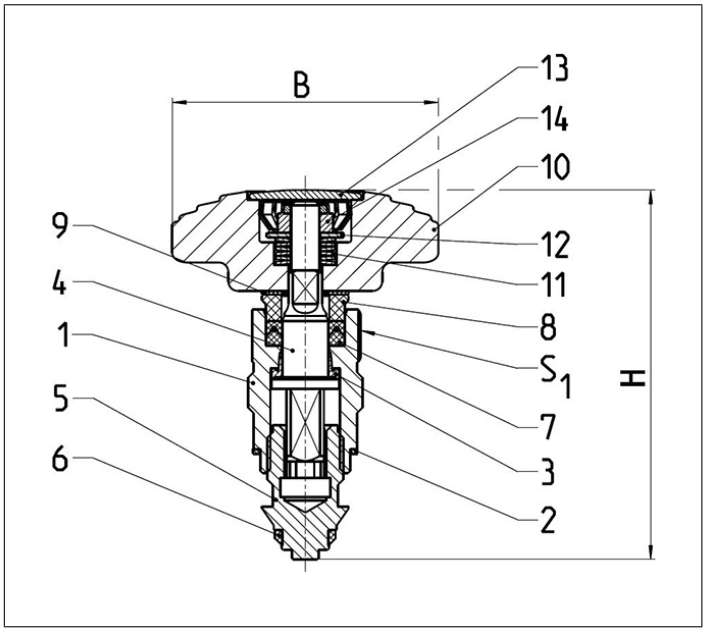

Type 01950	Technical data				
Nominal size	**DN**	**6**	**8**	**10**	**15**
Handwheel-Ø	B	67	67	67	67
Wrench size across flats	S_1	22	22	22	22
Weight	ca. kg	0.3	0.3	0.3	0.3

Dimensions in mm.

Spare Parts for Valves and Fill Cluster
Type 28302 - Topwork Angle Type

for Cryogenic-Globe Valves Angle Type

Bronze topwork,
" live loaded " gland packing
" cleaned and degreased for oxygen service "

Part No. 28302.X.0000

suitable for:

Type	Nominal size
01332	DN15 - DN50

Materials		DIN EN	ASTM
1	Valve seal	PTFE / Carbon filled (25%)	
2	Disc	CW614N	B 283 UNS C38500
3	Bonnet gasket	PTFE	
4	Headpiece	CC493K	B 505 UNS C93200
5	Bolts	1.4301/A2	A 194 B8
6	Stem	1.4301	A 276 Grade 304
7	Gland packing	Graphite / PTFE	
8	Gland nut	CW614N	B 283 UNS C38500
9	Handwheel	Aluminium alloy	

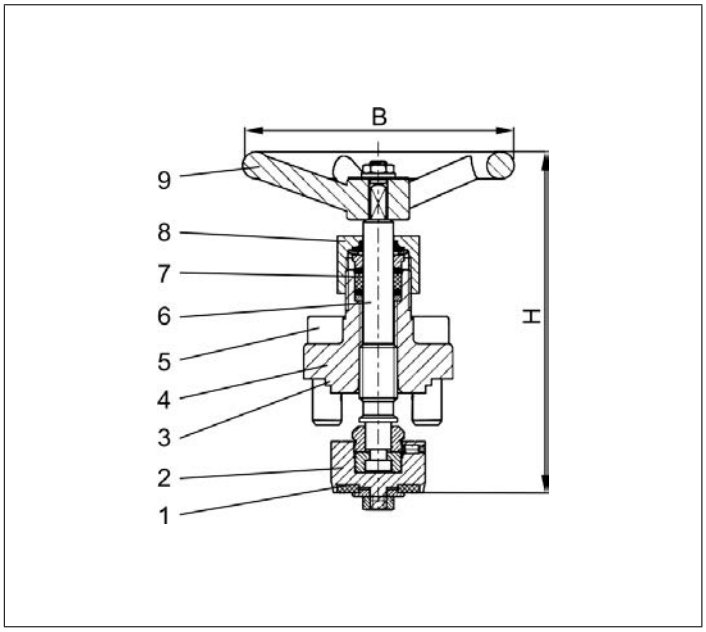

Type 28302	Technical data							in preparation	
Nominal size	**DN**	**15**	**20**	**25**	**32**	**40**	**50**	**80**	**100**
Dimension code	.X.	0150	0200	0250	0320	0400	0500	-	-
Height	H	130	130	130	155	160	185	-	-
Number of bolts		4	4	4	4	4	6	-	-
Handwheel-Ø	B	100	100	100	125	125	125	-	-
Weight	ca. kg	0.7	0.95	1.0	1.5	1.9	2.7	-	-

Dimensions in mm.

Edition 2022-11

Spare Parts for Valves and Fill Cluster
Type 28352 - Topwork Angle Type

for Cryogenic-Globe Valves Angle Type

Stainless steel topwork,
" live loaded " gland packing
" cleaned and degreased for oxygen service "

Part No. 28352.X.0000

suitable for:

Type	Nominal size
01352	DN15 - DN50

Materials		DIN EN	ASTM
1	Valve seal	PTFE / Carbon filled (25%)	
2	Disc	1.4301	A 276 Grade 304
3	Bonnet gasket	PTFE	
4	Headpiece	1.4301 / 1.4308	A 276 Grade 304 / A 351 CF8
5	Bolts	1.4301/A2	A 194 B8
6	Stem	1.4301	A 276 Grade 304
7	Gland packing	Graphite / PTFE	
8	Gland nut	1.4305	A 276 Grade 303
9	Handwheel	Aluminium alloy	
10	Bush	CW452K	B 159 UNS C51900

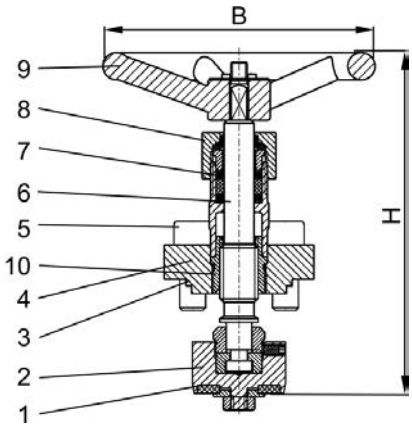

Type 28352	Technical data							in preparation	
Nominal size	**DN**	**15**	**20**	**25**	**32**	**40**	**50**	**80**	**100**
Dimension code	.X.	0150	0200	0250	0320	0400	0500	-	-
Height	H	130	130	130	155	160	185	-	-
Number of bolts		4	4	4	4	4	6	-	-
Handwheel-Ø	B	100	100	100	125	125	125	-	-
Weight	ca. kg	0.7	0.95	1.0	1.5	1.9	2.7	-	-

Dimensions in mm.

Spare Parts for Valves and Fill Cluster
Type 28312 - Topwork Angle Type

for Cryogenic-Globe Valves Angle Type

Bronze topwork
" live loaded " gland packing
" cleaned and degreased for oxygen service "

Part No. 28312.X.0010 (H=270mm)
Part No. 28312.X.0020 (H=370mm)

Part No. 28312.X.5010 (H=270mm) with check function
Part No. 28312.X.5020 (H=370mm) with check function

suitable for:

Type	Nominal size
01322	DN15 - DN50
07003 - only angled valves	DN25 & DN40
07004 - only angled valves	DN25 & DN40
07015 - only angled valves	DN25 & DN40

Materials		DIN EN	ASTM
1	Valve seal	PTFE / Carbon filled (25%)	
2	Disc	CW614N	B 283 UNS C38500
3	Bonnet gasket	PTFE	
4	Headpiece	CC493K	B 505 UNS C93200
5	Bolts	1.4301/A2	A 194 B8
6	Elongation tube	1.4541	A 213 TP 321
7	Stem	1.4301	A 276 Grade 304
8	Gland packing	Graphite / PTFE	
9	Gland nut	CW614N	B 283 UNS C38500
10	Handwheel	Aluminium alloy	
11	Spring	CW452K	B 159 UNS C51900

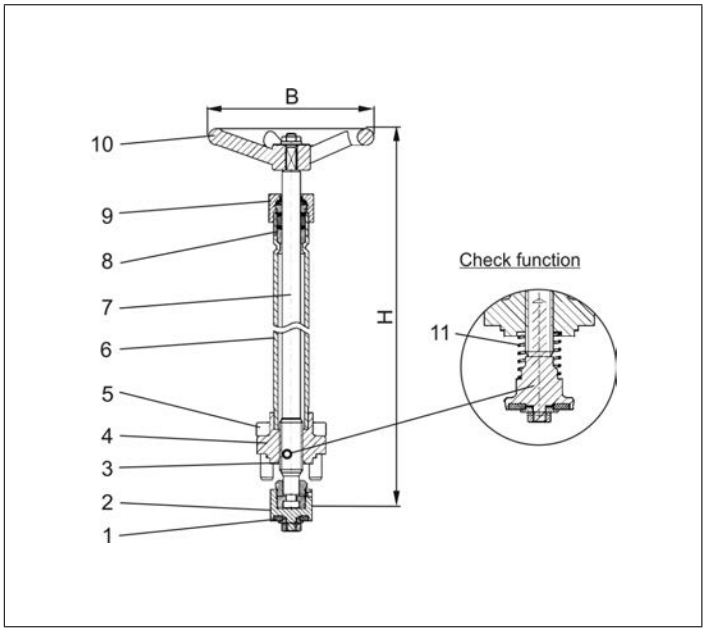

Type 28312	Technical data							in preparation	
Nominal size	**DN**	**15**	**20**	**25**	**32**	**40**	**50**	**80**	**100**
Dimension code	.X.	0150	0200	0250	0320	0400	0500	-	-
Height	H	270 mm or 370 mm						-	-
Number of bolts		4	4	4	4	4	6	-	-
Handwheel-Ø	B	100	100	100	125	125	125	-	-
Weight	ca. kg	1.1	1.4	1.4	2.0	2.4	3.0	-	-

Dimensions in mm.

Edition 2022-11

Spare Parts for Valves and Fill Cluster
Type 28342 - Topwork Angle Type

for Cryogenic-Globe Valves Angle Type

Stainless steel topwork,
" live loaded " gland packing
" cleaned and degreased for oxygen service "

Part No. 28342.X.0010 (H=270mm)

Part No. 28342.X.0020 (H=370mm)

suitable for:

Type	Nominal size
01342	DN15 - DN50
07017	DN25 & DN40

Materials		DIN EN	ASTM
1	Valve seal	PTFE / Carbon filled (25%)	
2	Disc	1.4301	A 276 Grade 304
3	Bonnet gasket	PTFE	
4	Headpiece	1.4301 / 1.4308	A 276 Grade 304 / A 351 CF8
5	Bolts	1.4301/A2	A 194 B8
6	Elongation tube	1.4541	A 213 TP 321
7	Stem	1.4301	A 276 Grade 304
8	Gland packing	Graphite / PTFE	
9	Gland nut	1.4305	A 276 Grade 303
10	Handwheel	Aluminium alloy	
11	Bush	CW452K	B 159 UNS C51900

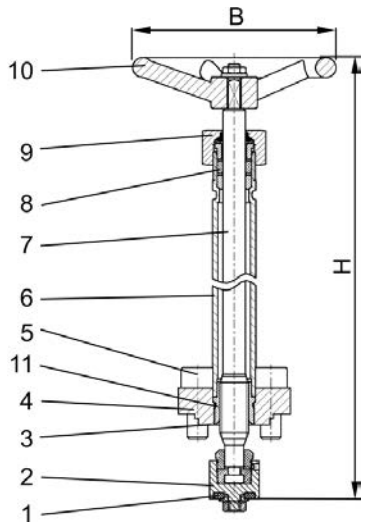

Type 28342	Technical data							in preparation	
Nominal size	**DN**	**15**	**20**	**25**	**32**	**40**	**50**	**80**	**100**
Dimension code	.X.	0150	0200	0250	0320	0400	0500	-	-
Height	H	270 mm or 370 mm						-	-
Number of bolts		4	4	4	4	4	6	-	-
Handwheel-Ø	B	100	100	100	100	125	125	-	-
Weight	ca. kg	1.1	1.4	1.4	2.0	2.4	3.0	-	-

Dimensions in mm.

Spare Parts for Valves and Fill Cluster
Type 29340 - Topwork

for Cryogenic-Gate Valves

Stainless steel topwork,
one way tightening (in flow direction),
" live loaded " gland packing
" cleaned and degreased for oxygen service "

Part No. 29340.0400.0010 (DN40)

Part No. 29340.X.0020

suitable for:

Type	Nominal size
09340	DN25 - DN100

Materials		DIN EN	ASTM
1	Valve seal	PTFE / Carbon filled (25%)	
2	Disc	CW452K	B 159 UNS C51900
3	Wedge	1.4308	A 351 CF8
4	Stem	1.4301	A 276 Grade 304
5	Bonnet gasket	PTFE	
6	Headpiece	1.4308	A 351 CF8
7	Bolts	1.4301/A2	A 194 B8
8	Elongation tube	1.4541	A 213 TP 321
9	Gland packing	Graphite / PTFE	
10	Gland nut	1.4305	A 276 Grade 303
11	Handwheel	Aluminium alloy	
12	Bush	CW452K	B 159 UNS C51900

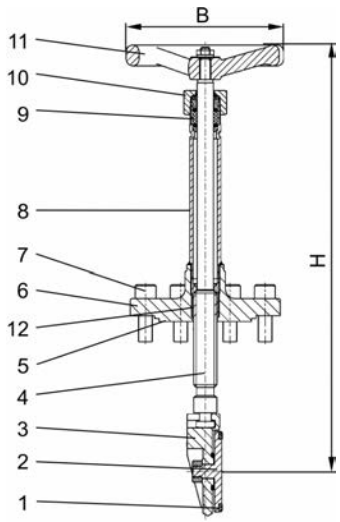

Type 29340	Technical data						
Nominal size	**DN**	**25**	**40**	**50**	**65**	**80**	**100**
Dimension code	.X.	0250	0400	0500	0650	0800	1000
Height	H	300/400	320/420	360	370	380	470/570
Number of bolts		4	4	6	8	6	8
Handwheel-Ø	B	125	125	150	150	150	200
Weight	ca. kg	2.0	2.3	3.6	4.2	5.5	10.4

Dimensions in mm.

Edition 2022-11

Spare Parts for Valves and Fill Cluster

Type 30000 - Sealing spare part kit

for Cryogenic-Globe Valves

" cleaned and degreased for oxygen service "

consisting of:
· 2x Bonnet gasket PTFE
· 1x Disc nut 1.4301
· 1x Stem sealing kit complete PTFE/Graphite

Part No. 30000.X.0000
with disc seal PTFE/Carbon filled (25%) up to DN50
with disc seal PTFE from DN65

Part No. 30000.X.0000PTF
with disc seal PTFE up to DN50

Part No. 30000.X.0300
with disc seal PCTFE

suitable for:

Type	Nominal size
01301, 01311	DN10 - DN50
01305, 01315, 02401, 02411	DN10 - DN50
01321, 01331	DN10 - DN150
01332, 01322	DN10 - DN50
01335, 01325	DN10 - DN50
01353	DN15 - DN80
03331, 03321	DN25 - DN150

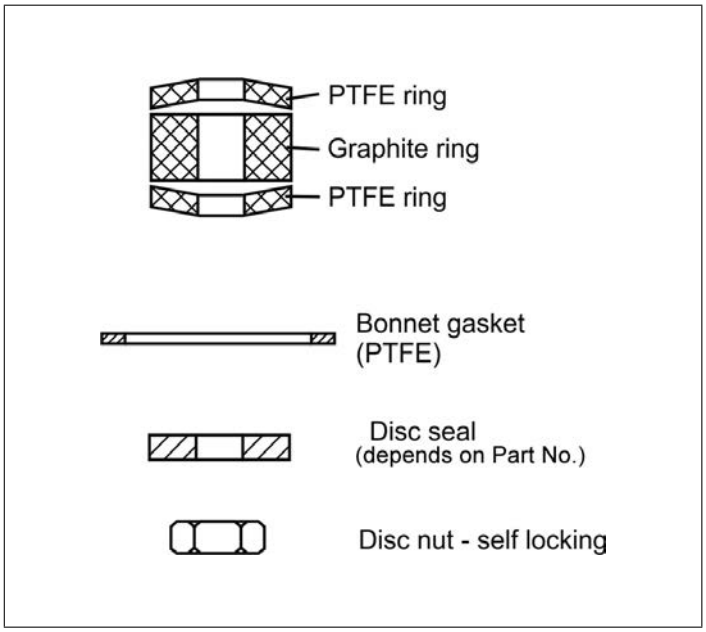

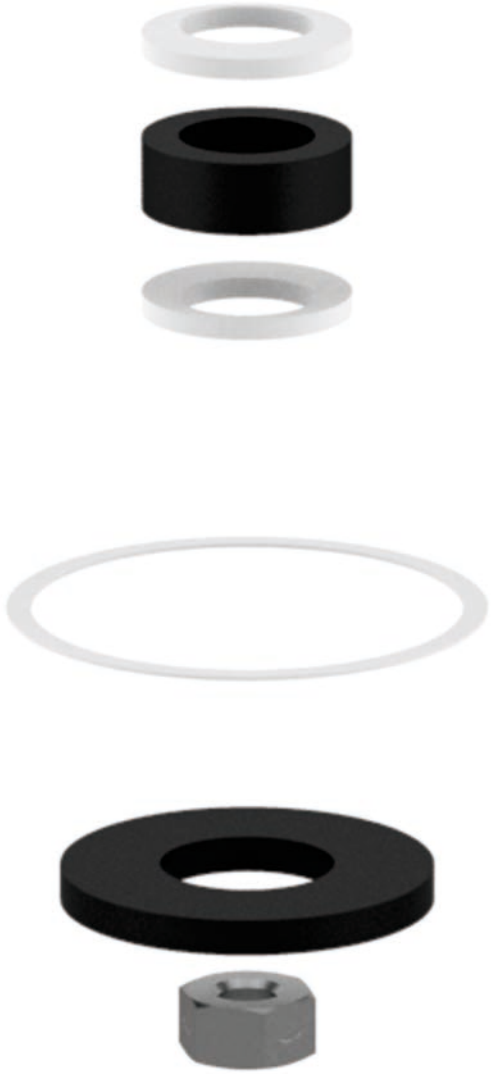

Type 30000	Technical data											
Nominal size	**DN**	**10**	**15**	**20**	**25**	**32**	**40**	**50**	**65**	**80**	**100**	**150**
Dimension code	.X.	0100	0150	0200	0250	0320	0400	0500	0650	0800	1000	1500
Weight	ca. kg	0.03	0.03	0.04	0.05	0.07	0.08	0.12	0.17	0.23	0.31	0.35

Dimensions in mm.

Spare Parts for Valves and Fill Cluster

Type 30290 - Sealing spare part kit

for Cryogenic-Gate Valves

" cleaned and degreased for oxygen service "

consisting of:
· 2x Bonnet gasket PTFE
· 1x Gland packing kit complete PTFE/Graphite
· 2x Stem gasket Mica (DN100 - 4x)

Part No. 30290.X.S000

suitable for:

Type	Nominal size
09340, 09345, 09440	DN25 - DN100

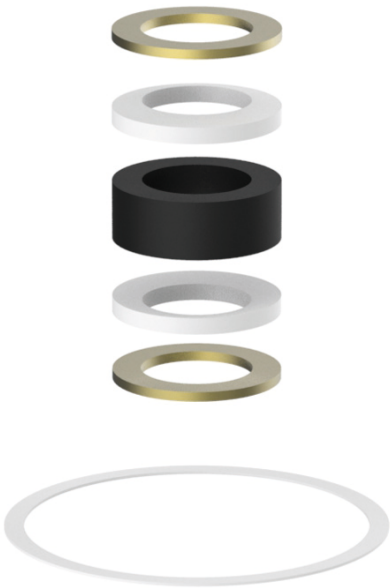

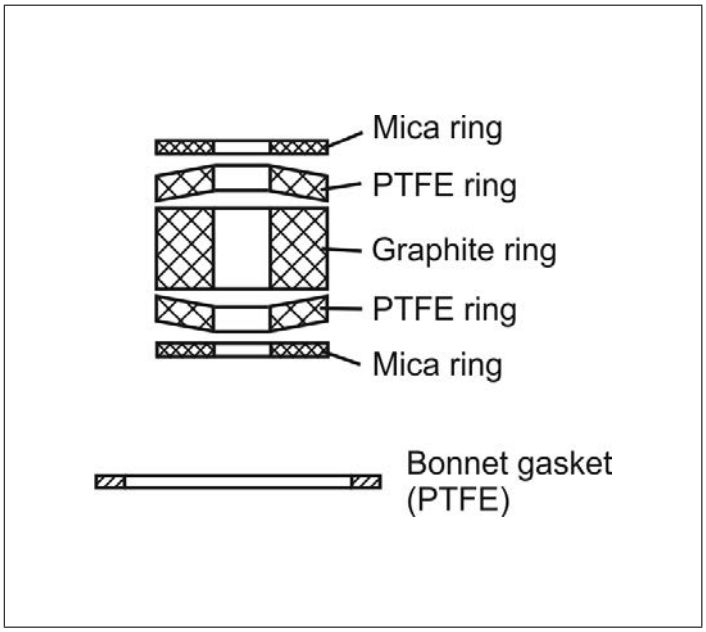

Type 30293	Technical data						
Nominal size	**DN**	**25**	**40**	**50**	**65**	**80**	**100**
Dimension code	.X.	0250	0400	0500	0650	0800	1000
Weight	ca. kg	0.03	0.06	0.11	0.16	0.22	0.30

Dimensions in mm.

Edition 2022-11

Spare Parts for Valves and Fill Cluster

Type 30293 - Sealing spare part kit

for Cryogenic-Gate Valves with bellow actuator

" cleaned and degreased for oxygen service "

consisting of:
· 2x Bonnet gasket PTFE
· 1x Gland packing kit complete PTFE/Graphite
· 2x Stem gasket Mica

Part No. 30293.X.S000

suitable for:

Type	Nominal size
09343	DN25 - DN100
09443	DN25 - DN65

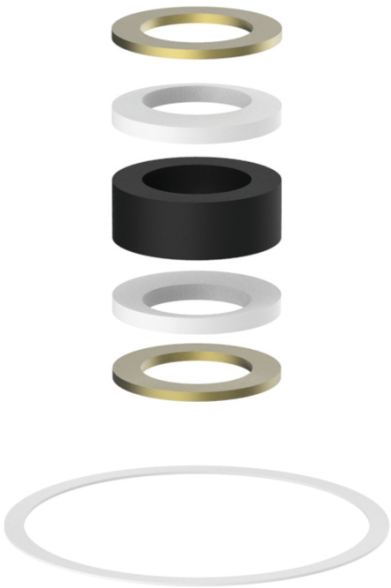

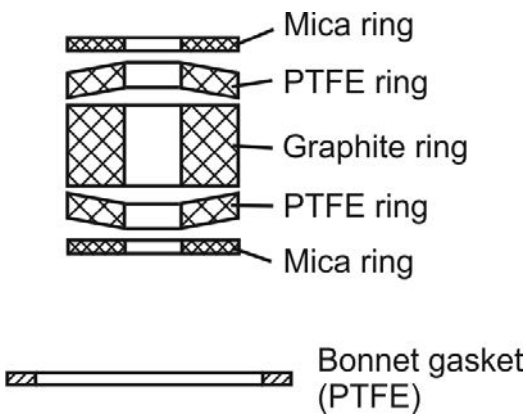

Type 30293	Technical data						
Nominal size	**DN**	**25**	**40**	**50**	**65**	**80**	**100**
Dimension code	.X.	0250	0400	0500	0650	0800	1000
Weight	ca. kg	0.03	0.06	0.11	0.16	0.22	0.30

Dimensions in mm.

Spare Parts for Valves and Fill Cluster

Type 30001, 30002, 30341, 30343 - Sealing spare part kit

for Cryogenic-Globe Valves
" cleaned and degreased for oxygen service "
consisting of:
· 2x Bonnet gasket PTFE
· 1x Disc seal PTFE/Carbon filled (25%)
· 1x Disc nut 1.4301
· 1x Gland packing kit complete PTFE/Graphite
· 2x Stem gasket Mica

Part No. 30001.X.0765
Part No. 30002.X.0765
Part No. 30341.X.0000
Part No. 30343.X.0000

30001.X.0765 suitable for:

Type	Nominal size
01420	DN10, DN65 - DN80
01423	DN65 - DN80

30002.X.0765 suitable for:

Type	Nominal size
01423	DN10 - DN20

30341.X.0000 suitable for:

Type	Nominal size
01341	DN10 - DN200
01342, 01352	DN15 - DN50
01343	DN10 - DN50, DN100, DN200
01345, 01355	DN10 - DN50
01351	DN10 - DN150
01420	DN15 - DN25, DN40 - DN50, DN100
01423	DN25, DN40 - DN50, DN100
03341, 03351	DN15 - DN150
03343	DN15 - DN50, DN100, DN200

30343.X.0000 suitable for:

Type	Nominal size
01343, 03343	DN65 - DN80, DN150

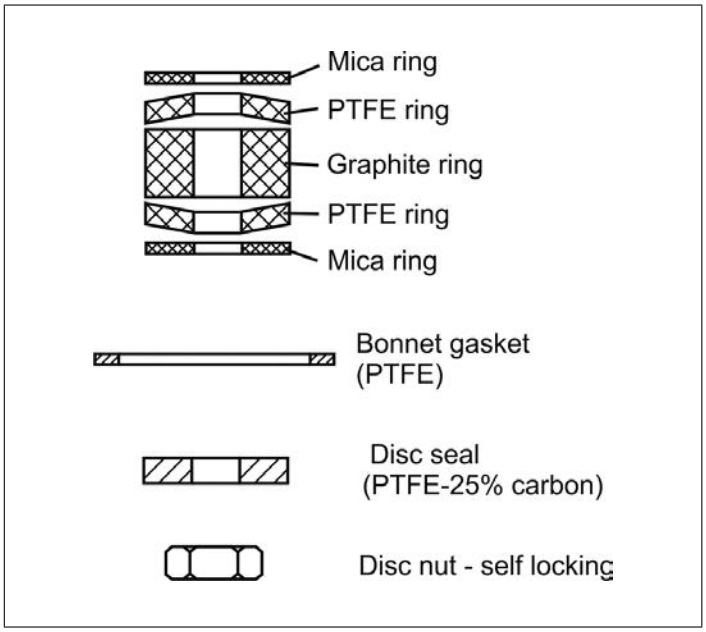

Type 30001/30002/30341/30343	Technical data												
Nominal size	**DN**	**10**	**15**	**20**	**25**	**32**	**40**	**50**	**65**	**80**	**100**	**150**	**200**
Dimension code	.X.	0100	0150	0200	0250	0320	0400	0500	0650	0800	1000	1500	2000
Weight	ca. kg	0.03	0.03	0.04	0.05	0.07	0.08	0.13	0.18	0.24	0.32	0.68	1.91

Dimensions in mm.

Edition 2022-11

Spare Parts for Valves and Fill Cluster

Type 30353 - Sealing spare part kit

for Cryogenic-Globe Valves

" cleaned and degreased for oxygen service "

consisting of:
· 2x Bonnet gasket PTFE
· 1x Gland packing kit complete PTFE/Graphite
· 2x Stem gasket Mica

Part No. 30353.X.0000

suitable for:

Type	Nominal size
01353	DN20 - DN80

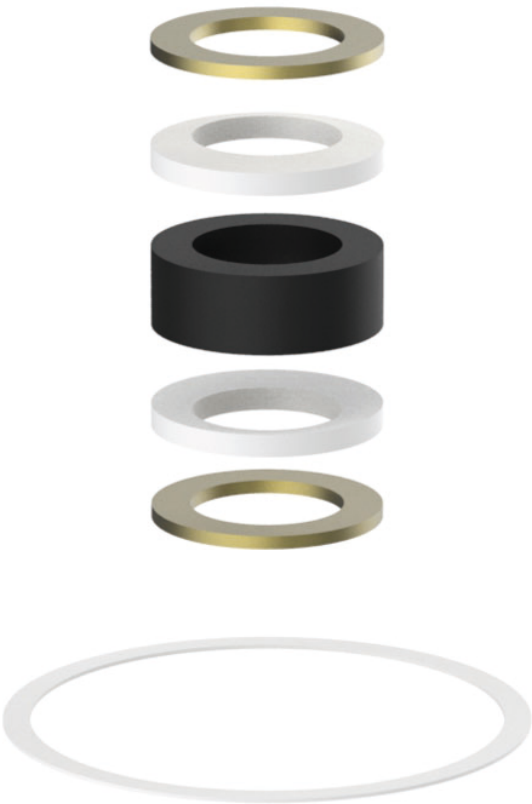

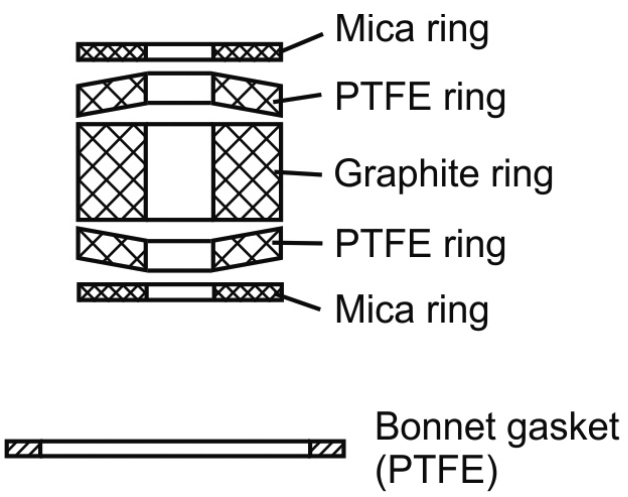

Type 30353	Technical data						
Nominal size	**DN**	**20**	**25**	**40**	**50**	**65**	**80**
Dimension code	.X.	0200	0250	0400	0500	0650	0800
Weight	ca. kg	0.03	0.05	0.08	0.13	0.18	0.24

Dimensions in mm.

Spare Parts for Valves and Fill Cluster

Type 31514 - KEL-F (PCTFE) Disc sealing spare part kit

for Cryogenic Globe Valves and Check Valves

" cleaned and degreased for oxygen service "

consisting of:
· 2x Bonnet gasket PTFE
· 1x Disc seal KEL-F (PCTFE)
· 1x Disc nut 1.4301

Part No. 31514.X.PCTFE

suitable for:

Type	Nominal size
01301, 01311	DN10 - DN50
01305, 01315, 02401, 02411	DN10 - DN50
01331	DN10 - DN100
01321	DN10 - DN100
01332, 01322	DN10 - DN50
01335, 01325	DN10 - DN50
03331, 03321	DN25 - DN150
01351	DN10 - DN100
01341	DN10 - DN150
01352, 01342	DN15 - DN50
01355, 01345	DN10 - DN50
03351, 03341	DN25 - DN150

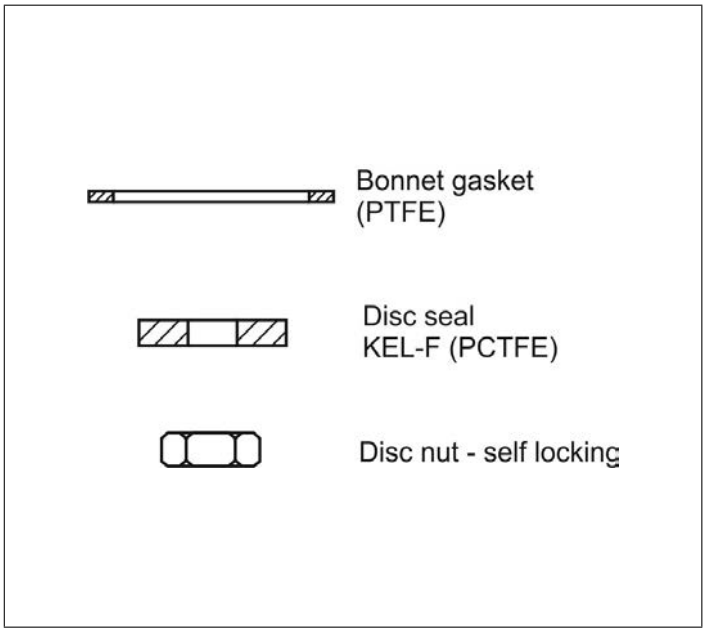

Type 31514	Technical data											
Nominal size	**DN**	**10**	**15**	**20**	**25**	**32**	**40**	**50**	**65**	**80**	**100**	**150**
Dimension code	.X.	0100	0150	0200	0250	0320	0400	0500	0650	0800	1000	1500
Weight	ca. kg	0.02	0.02	0.03	0.04	0.06	0.07	0.11	0.16	0.22	0.30	0.40

Dimensions in mm.

Edition 2022-11

Spare Parts for Valves and Fill Cluster

Type 17800 - Spare part kit

for Cryogenic Butterfly Valves Type 17800 Buttweld Type

" cleaned and degreased for oxygen service "

consisting of:
· 1x CSI-Ring Inconel
· 1x CSE-Ring Inconel
· 2x Bearing hard chromed
· 5x Gland packing graphite
· 1x Cover seal

Part No. 17800.X.E00101

Type 17800	Technical Data								
Nominal size	**DN**	**80**	**100**	**150**	**200**	**250**	**300**	**350**	**400**
Dimension code	.X.	0080	0100	0150	0200	0250	0300	0350	0400

for Cryogenic Butterfly Valves Top Entry Type 17800 Buttweld Type

" cleaned and degreased for oxygen service "

Part No. 17800.X.E00102

consisting of:
· 1x CSI-Ring Inconel
· 1x CSE-Ring Inconel
· 1x O-Ring inconel top flange
· 2x Bearing hard chromed
· 5x Gland packing graphite
· 1x Cover seal

Type 17800	Technical Data							
Nominal size	**DN**	**100**	**150**	**200**	**250**	**300**	**350**	**400**
Dimension code	.X.	0100	0150	0200	0250	0300	0350	0400

Spare Parts for Valves and Fill Cluster
Type 55318, Type 55317 - Handwheel

for Cryogenic Globe Valves

Handwheels made out of aluminium or stainless steel

Nominal size Globe Valve	Colour	Part No. (aluminium)	Part No. (stainless steel)
DN10 - DN25	white (RAL 9010)	55318.0001.0402	55318.0016.0783
DN32 - DN50	white (RAL 9010)	55318.0002.0402	55318.0017.0783

Nominal size Globe Valve	Colour	Part No. (aluminium)	Part No. (stainless steel)
DN65	silver (natural)	55317.0021.0402	55317.0118.0783
DN80	silver (natural)	55317.0022.0402	55317.0117.0783
DN100	silver (natural)	55317.0068.0402	55317.0119.0783
DN150	silver (natural)	55317.0016.0402	55317.0120.0783
DN200	silver (natural)	55317.0106.0402	55317.0122.0767

for Cryogenic Bellow sealed Valves

Nominal size Bellow sealed Valve	Colour	Part No. (aluminium)	Part No. (stainless steel)
DN10 - DN50	silver (natural)	55317.0029.0402	55317.0123.0783

for Cryogenic Gate Valves

Nominal size Gate Valve	Colour	Part No. (aluminium)
DN25 - DN40	white (RAL 9010)	55318.0002.0402
DN50 - DN80	silver (natural)	55317.0029.0402
DN100	silver (natural)	55317.0020.0402

Handwheels (available colours) made ot of aluminium for Cryogenic Globe Valves DN10 - DN50

Nominal size	Colour	Part No.
DN10 - DN25	silver (natural)	55318.0016.0402
DN32 - DN50	silver (natural)	55318.0017.0402

Nominal size	Colour	Part No.
DN10 - DN25	red (RAL 3000)	55318.0004.0402
DN32 - DN50	red (RAL 3000)	55318.0005.0402

Nominal size	Colour	Part No.
DN10 - DN25	blue (RAL 5015)	55318.0007.0402
DN32 - DN50	blue (RAL 5015)	55318.0008.0402

Nominal size	Colour	Part No.
DN10 - DN25	green (RAL 6005)	55318.0010.0402
DN32 - DN50	green (RAL 6005)	55318.0011.0402

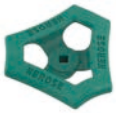

Nominal size	Colour	Part No.
DN10 - DN25	black (RAL 9011)	55318.0013.0402
DN32 - DN50	black (RAL 9011)	55318.0014.0402

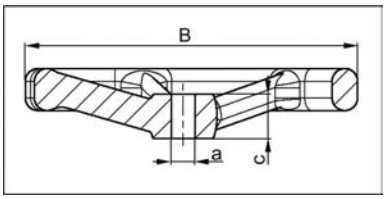

Type 55318	Technical Data			Type 55317						
		.0001.0402	.0002.0402							
		.0004.0402	.0005.0402							
		.0007.0402	.0008.0402							
		.0010.0402	.0011.0402	.0016.0402	.0020.0402	.0021.0402	.0022.0402	.0029.0402	.0068.0402	.0106.0402
		.0013.0402	.0014.0402	.0120.0783		.0118.0783	.0117.0783	.0123.0783	.0119.0783	.0122.0767
		.0016.0402	.0017.0402							
		.0016.0783	.0017.0783							
Handwheel-Ø	B	100	125	360	200	200	250	150	315	630
Square	a	7	10	15	12	10	10	10	12	27
Hub height	c	15	19,5	35,0	30,0	20,5	20,0	19,0	33,0	56,0
Weight	ca. kg	0,1	0,15	3,4	0,85	0,8	0,15	0,35	2,5	9,7

Dimensions in mm.

Edition 2022-11

Spare Parts for Valves and Fill Cluster
Type 55379 - Position indicator

Position indicator
for Cryogenic-Globe Valves

Part No. 55379.0037.0783
for Globe Valves DN10 - DN25
Part No. 55379.0038.0783
for Globe Valves DN40 - DN50
Part No. 55379.0033.0783
for Globe Valves DN65 - DN80
Part No. 55379.0024.1783
for Globe Valves DN100
Part No. 55379.0034.0783
for Globe Valves DN150

Materials	DIN EN	ASTM
1 Indicator	1.4404	A 276 Grade 316L

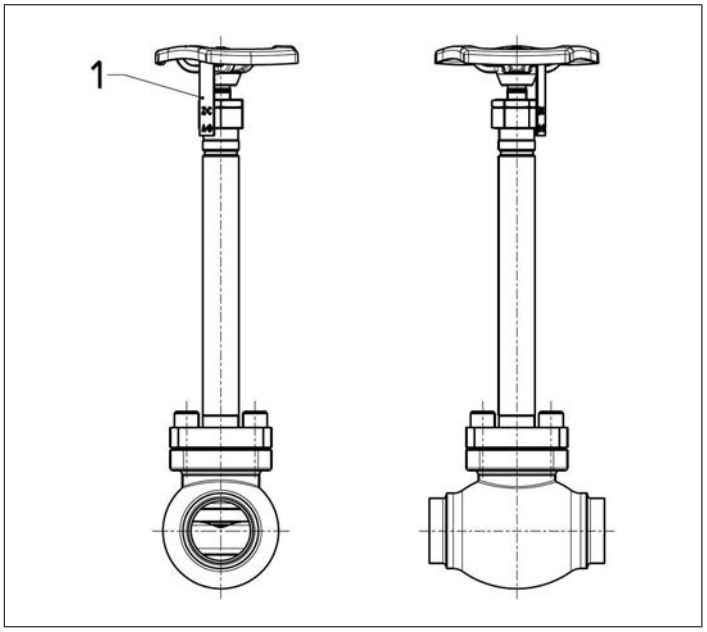

Spare Parts for Valves and Fill Cluster
Type 55579 - Valve locking

for Cryogenic-Globe Valves

Valve locking in vinyl
for protection against damage and unauthorized access.
locking with locking wire or padlock (shackle thickness max. 7.7mm) - not included
temperature range: -30°C up to +300°C

Part No. 55579.0005.0841
for handwheel diameter 60mm - 130mm

Part No. 55579.0006.0841
for handwheel diameter 131mm - 165mm

Part No. 55579.0007.0841
for handwheel diameter 166mm - 250mm

Part No. 55579.0008.0841
for handwheel diameter 251mm - 330mm

Available options - on request only:
· other colours
· additional sizes

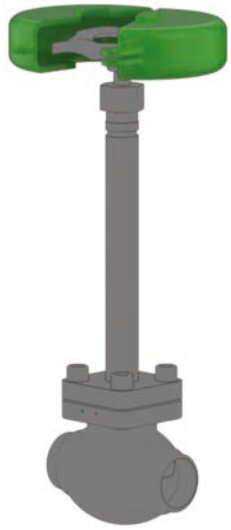

Important: Please specify the diameter of handwheel when ordering.

Spare Parts for Valves and Fill Cluster
Type 66394 - Alcatraz-Valve locking

Alcatraz-Valve locking
for protection against unauthorized operating of valves
valve interlock for DN10 - DN200
stainless steel 316 electro polished (offshore suitable)
with position indicator OPEN / CLOSED
handwheel made of G20Mn5, coated with dacromet

Part No. 66394.0100.0000C
Type SML 1 (Single key Multi turn interLock) interlocked with valve closed (DN10-DN150)
Part No. 66394.0100.0000O
Type SML 1 (Single key Multi turn interLock) interlocked with valve opened (DN10-DN150)
Part No. 66394.0100.0000C-O
Type DML 1 (Double key Multi turn interLock) interlocked with valve closed and opened (DN10-DN150)

Part No. 66394.0300.0000C
Type SML 3 (Single key Multi turn interLock) interlocked with valve closed (DN200)
Part No. 66394.0300.0000O
Type SML 3 (Single key Multi turn interLock) interlocked with valve opened (DN200)
Part No. 66394.0300.0000C-O
Type DML 3 (Double key Multi turn interLock) interlocked with valve closed and opened (DN200)

Part No. 66322.0002.0000
Control key for locking device
Part No. 66322.0003.0000
Master key for locking device
Part No. 66322.0004.2000
Key box for two keys
Part No. 66322.0004.3000
Key box for three keys
Part No. 66322.0004.4000
Key box for four keys
Part No. 66322.0005.1000
Loose Toolset

Materials		DIN EN	ASTM
1	Handwheel	1.6220	LCC
2	Stem adapter	1.4401	316
3	Mounting	1.4401	316
4	Fixation	1.4401	316
5	Multiturn main unit	1.4401 / 1.4408	316 / CF8M
6	Lock incl. flap	1.4401 / 1.4408	316 / CF8M
7	Key	1.4401 / 1.4408	316 / CF8M

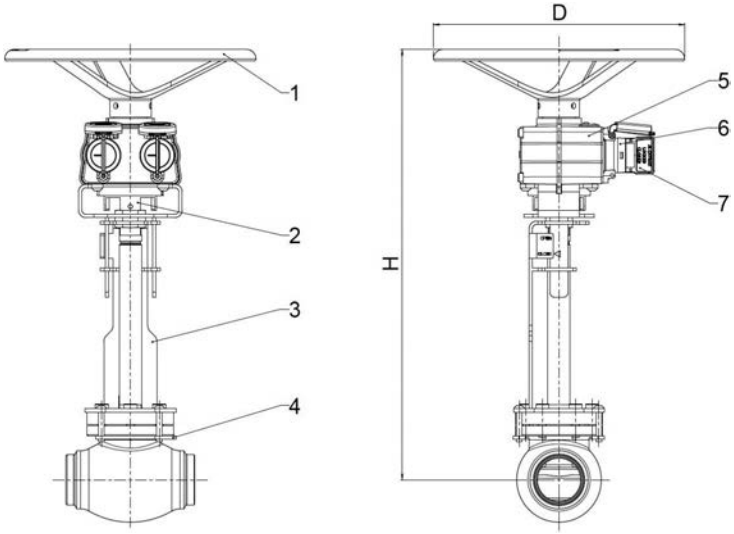

Type 66394	Technical Data						
Part No.	**66394.**	**.0100.X**	**.0100.X**	**.0100.X**	**.0100.X**	**.0100.X**	**.0300.X**
Nominal size	DN	10 - 50	65	80	100	150	200
Locking device	Type	SML1/DML1	SML1/DML1	SML1/DML1	SML1/DML1	SML1/DML1	SML3/DML3
Height	H	399/499	402/502	456/506	522	578	677
Diameter	D	150	200	250	300	400	635
Weight	ca. kg	5.3	5.3	5.3	5.3	5.3	9.4

Dimensions in mm.

Spare Parts for Valves and Fill Cluster
Type 11C01 - Globe Valve FullX

Sealing spare part kit – without bellow & bellow top position
" cleaned and degreased for oxygen service "

consisting of:
· 1x wiper PEEK
· 1x gland bold 1.4404
· 1x stem ring CW452K
· 2x O-ring FPM
· 1x gasket PTFE / 25% Carbon filled
· 6x bonnet gasket PTFE
· 6x or 8x bolt A4
· 1x ball bearing 1.4125

Part No. 11C01.00XX.E00101

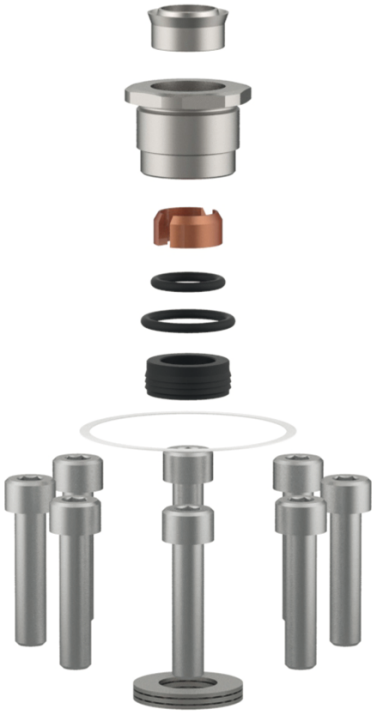

suitable for:

Type	Nominal size
11C01.0000.E00101	DN10 - DN25
11C01.0032.E00101	DN32
11C01.0040.E00101	DN40
11C01.0050.E00101	DN50

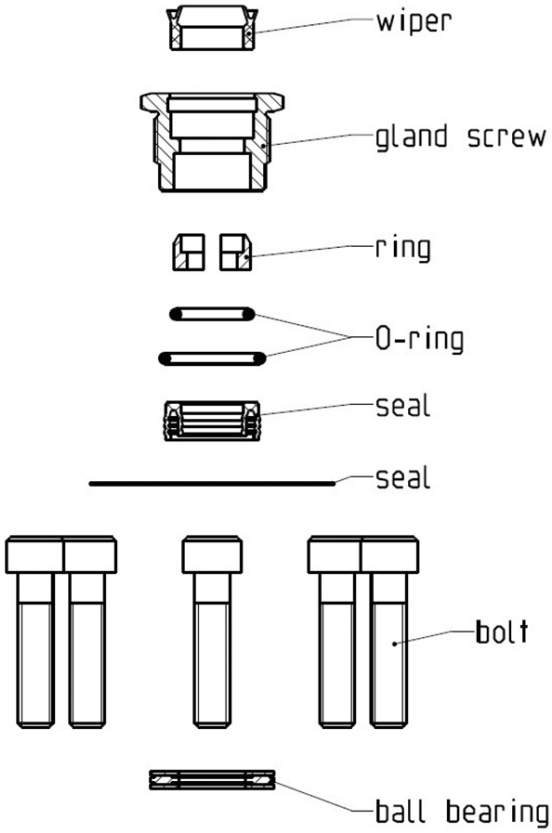

Type 11C01	Technical data							
Nominal size	**DN**	**10**	**15**	**20**	**25**	**32**	**40**	**50**
Dimension code	.X.	0000	0000	0000	0000	0032	0040	0050
Weight	ca. kg	0.14	0.14	0.14	0.14	0.24	0.24	0.28

Dimensions in mm.

Edition 2022-11

Spare Parts for Valves and Fill Cluster
Type 11C01 - Globe Valve FullX

Sealing spare part kit – bellow bottom position
" cleaned and degreased for oxygen service "

consisting of:
· 1x wiper PEEK
· 1x gland bolt 1.4404
· 1x stem ring CW452K
· 2x O-ring FPM
· 2x gasket PTFE / 25% Carbon filled
· 6x bonnet gasket PTFE
· 6x or 8x bolt A4
· 1x ball bearing 1.4125

Part No. 11C01.00XX.E00102

suitable for:

Type	Nominal size
11C01.0000.E00102	DN10 - DN25
11C01.0032.E00102	DN32
11C01.0040.E00102	DN40
11C01.0050.E00102	DN50

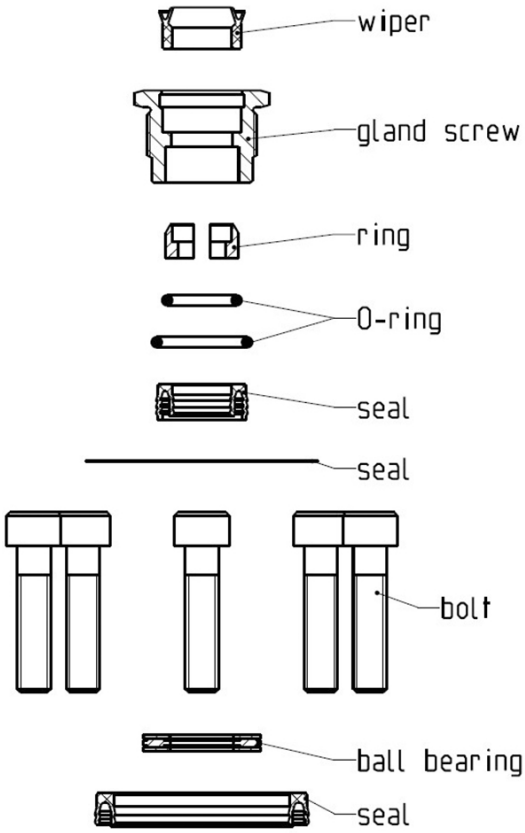

Type 11C01	Technical data							
Nominal size	**DN**	**10**	**15**	**20**	**25**	**32**	**40**	**50**
Dimension code	.X.	0000	0000	0000	0000	0032	0040	0050
Weight	ca. kg	0.14	0.14	0.14	0.14	0.25	0.25	0.29

Dimensions in mm.

Type 11C01 - Globe Valve FullX

Disc
for Cryogenic-Globe Valves
stainless steel check disc 1.4301

" cleaned and degreased for oxygen service "

Part No. 11C01.00XX.E00501
suitable for:

Type	Nominal size
11C01.001X.E00501	DN10 - DN15
11C01.002X.E00501	DN20 - DN25
11C01.0032,E00501	DN32
11C01.0040.E00501	DN40
11C01.0050.E00501	DN50

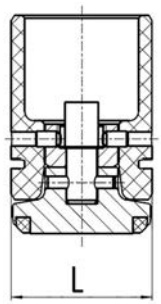

Type 11C01.00XX.E00501	Technical data							
Nominal size	**DN**	**10**	**15**	**20**	**25**	**32**	**40**	**50**
Dimension code	.X.	001X	001X	002X	002X	0032	0040	0050
Weight	ca. kg	0.17	0.17	0.23	0.23	0.46	0.46	0.59

Dimensions in mm.

Check Disc
for Cryogenic-Globe Valves
stainless steel check disc 1.4301

" cleaned and degreased for oxygen service "

Part No. 11C01.00XX.E00502
suitable for:

Type	Nominal size
11C01.001X.E00502	DN10 - DN15
11C01.002X.E00502	DN20 - DN25
11C01.0032.E00502	DN32
11C01.0040.E00502	DN40
11C01.0050.E00502	DN50

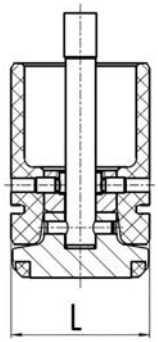

Type 11C01.00XX.E00502	Technical data							
Nominal size	**DN**	**10**	**15**	**20**	**25**	**32**	**40**	**50**
Dimension code	.X.	001X	001X	002X	002X	0032	0040	0050
Weight	ca. kg	0.20	0.20	0.25	0.25	0.50	0.50	0.62

Dimensions in mm.

Ball Valves and Spare Parts

Type 15C01 - Ball Valve full bore

Cryogenic Ball Valve

Unidirectional ball valve to be installed in flow direction with upstream pressure relief hole.
Socket weld connection for stainless steel pipes acc. to ISO 1127 or ASTM A312
Butt weld connection for stainless steel pipes acc. to ISO 1127 or ASTM A312
Female thread type NPT acc. to ANSI 1.20.1
Female thread type G (BSPP) acc. to ISO 228/1
Marking acc. to EN 1626
Top flange to EN ISO 5211
" cleaned and degreased for oxygen service "

Available accessories:
· Lock for locking device type 55394.0019.0302

Applications:
Approved for air gases, vapours and cryogenic liquefied gases.
Working temperature: -196°C / -321°F (77K) up to +65°C / +149°F (338K)

Materials		DIN EN	ASTM
1	Body	1.4409	A 351 CF3M
2	Ball seal	PCTFE	
3	Ball	1.4401	A 479 Grade 316
4	Side connection	1.4409	A 351 CF3M
5	Stem	1.4404	A 479 Grade 316
6	Bonnet extension	1.4409	A 351 CF3M
7	Gland packing	PTFE / Carbon filled (25%)	
8	Lever	1.4301	A 240 Grade 304

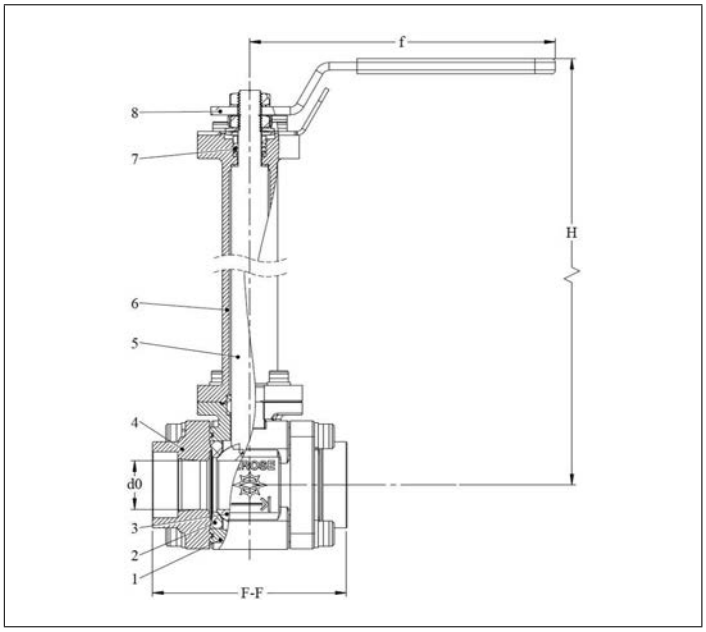

CE

Technical data - Standard design							
Nominal size [DN]	Height (H) [mm]	Orifice (D_0) [mm]	Weight [kg]	Kvs-value [m^3/h]	Cv-value [gal/min]	Length (f) [mm]	ISO 5211
10	296	8.0	2.5	5.7	6.6	127	F03
15	296	14.5	2.5	10.7	12.4	127	F03
20	305	19.5	3.1	24.7	28.6	157	F04
25	310	25.0	3.8	32.1	37.1	157	F04
32	376	32.0	6.5	77.9	90.1	240	F05
40	380	38.0	7.3	122.3	141.4	240	F05
50	427	50.0	13.6	124.1	143.7	420	F07
65	496	64.5	29.8	188.6	218.4	462.5	F10
80	592	80.0	44.7	279.8	323.7	600	F10

Type 15C01 - Ball Valve full bore

Connection types

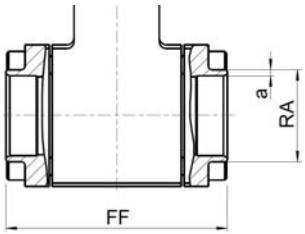

Butt weld connection acc. to
· ISO 1127

DN	Nominal Pressure [PN]	Face-to-face dim. (FF) [mm]	Outside pipe-Ø ISO (RA) [mm]	Wall thickness pipe ISO (a) [mm]	Part No.
10	100	65	13.5	2.0	15C01.A003.000002
15	50	70	21.3	2.0	15C01.A001.000002
20	100	85	26.3	2.0	15C01.A003.000014
25	50	100	33.7	2.0	15C01.A001.000006
32	70	115	42.4	2.6	15C01.A002.000008
40	70	125	48.3	3.2	15C01.A002.000014
50	50	150	60.3	2.9	15C01.A001.000010
65	30	182.5	76.1	2.9	15C01.A001.000243
80	20	218	88.9	3.2	15C01.A001.000247

Butt weld connection acc. to
· ASTM A312

DN	Nominal Pressure [PN]	Face-to-face dim. (FF) [mm]	Outside pipe-Ø ASTM (RA) [mm]	Wall thickness pipe ASTM (a) [mm]	Part No.
10	100	65	13.72	1.65	15C01.A003.000005
10	100	65	13.72	2.24	15C01.A003.000006
15	50	70	21.34	2.11	15C01.A001.000013
15	50	70	21.34	2.77	15C01.A001.000014
20	100	85	26.70	2.10	15C01.A003.000017
20	100	85	26.70	2.85	15C01.A003.000018
25	50	100	33.40	2.77	15C01.A001.000015
25	50	100	33.40	3.38	15C01.A001.000016
32	70	115	42.20	2.77	15C01.A002.000011
32	70	115	42.20	3.56	15C01.A002.000012
40	70	125	48.30	2.77	15C01.A002.000017
40	70	125	48.30	3.70	15C01.A002.000018
50	50	150	60.33	2.77	15C01.A001.000017
50	50	150	60.33	3.91	15C01.A001.000018
65	30	182.5	73.10	3.10	15C01.A001.000244
65	30	182.5	73.10	5.20	15C01.A001.000245
80	20	218	88.90	3.10	15C01.A001.000248
80	20	218	88.90	5.45	15C01.A001.000249

Type 15C01 - Ball Valve full bore

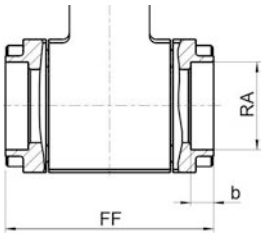

Socket weld connection acc. to
· ISO 1127
· ASTM A312

DN	Nominal Pressure [PN]	Face-to-face dim. (FF) [mm]	Socket depth (b) [mm]	Socket diameter (RA) [mm]	Part No.
10	100	65	6.0	14.1	15C01.A003.000001
15	50	70	10.0	21.3	15C01.A001.000001
20	100	85	13.0	27.5	15C01.A003.000013
25	50	100	13.0	33.7	15C01.A001.000005
32	70	115	13.0	38.2	15C01.A002.000007
40	70	125	13.0	48.7	15C01.A002.000013
50	50	150	16.0	60.3	15C01.A001.000009
65	10	182.5	16.0	77.0	15C01.A001.000242
80	10	218	16.0	90.0	15C01.A001.000246

Female thread type
· NPT acc. to ANSI 1.20.1
· G (BSPP) acc. to ISO 228/1

DN	Nominal Pressure [PN]	Face-to-face dim. (FF) [mm]	Thread size (GW) [mm]	Part No.
10	100	65	G 3/8	15C01.A003.000003
10	100	65	NPT 3/8	15C01.A003.000004
15	50	70	G 1/2	15C01.A001.000003
15	50	70	NPT 1/2	15C01.A001.000004
20	100	85	G 3/4	15C01.A003.000015
20	100	85	NPT 3/4	15C01.A003.000016
25	50	100	G 1	15C01.A001.000007
25	50	100	NPT 1	15C01.A001.000008
32	70	115	G 1 1/4	15C01.A002.000009
32	70	115	NPT 1 1/4	15C01.A002.000010
40	70	125	G 1 1/2	15C01.A002.000015
40	70	125	NPT 1 1/2	15C01.A002.000016
50	50	150	G 2	15C01.A001.000011
50	50	150	NPT 2	15C01.A001.000012

Ball Valves and Spare Parts

Type 15C01 - Spare part kit

consisting of:
· 2x Seats PCTFE
· 3x Cylinder screws stainless steel (head piece top)
· 1x Cylinder screw stainless steel (locking lever)
· 4x Cylinder screws stainless steel (head piece bottom)
· 8x Cylinder screws stainless steel (side parts)
· 2x Body gaskets PCTFE (bonnet extension) / PTFE (without bonnet extension)
· 1x Lower stem bearing PTFE/Glass fibre (25%)
· 1x Bonnet gasket PCTFE
· 2x Lock nuts stainless steel
· 1x Nut lock cover stainless steel
· 1x Thrust washer PTFE/Glass fibre (25%)
· 1x Hex nut stainless steel
· 2x Belleville washer stainless steel
· 1x Toothed lock washer stainless steel
· 1x Gland packing Graphite/PTFE
· 1x Gland stainless steel
· 12x Spring washer stainless steel

Part No. 15C01.X.E0010X

suitable for:

Type	Nominal size
15C01	DN10 - DN50

Version with bonnet extension

Part No.	Nominal size
15C01.0010.E00103	DN10
15C01.0015.E00103	DN15
15C01.0020.E00103	DN20
15C01.0025.E00102	DN25
15C01.0032.E00102	DN32
15C01.0040.E00102	DN40
15C01.0050.E00102	DN50

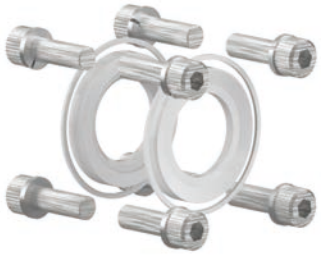

Version without bonnet extension

Part No.	Nominal size
15C01.0010.E00104	DN10
15C01.0015.E00104	DN15
15C01.0020.E00104	DN20
15C01.0025.E00104	DN25
15C01.0032.E00104	DN32
15C01.0040.E00104	DN40
15C01.0050.E00104	DN50

Ball Valves and Spare Parts

Type 15C01 - Lever

consisting of:
· 1x Locking nut stainless steel
· 1x Toothed locked washer stainless steel
· 1x Lever stainless steel with vinyl cover

Part No. 15C01.X.E00201

suitable for:

Type	Nominal size
15C01	DN10 - DN50

Type 15C01	Technical data							
Nominal size	**DN**	**10**	**15**	**20**	**25**	**32**	**40**	**50**
Dimension code	.X.	0010	0015	0020	0025	0032	0040	0050

Ball Valves and Spare Parts
Type 15C01 - Topwork

consisting of:
· 1x Topwork
· 4x Cylinder screws stainless steel
· 1x Lower stem bearing PTFE/Glass fibre (25%)
· 4x Spring washer stainless steel

Part No. 15C01.X.E0030X

suitable for:

Type	Nominal size
15C01	DN10 - DN50

Part No.	Nominal size
15C01.0010.E00303	DN10
15C01.0015.E00303	DN15
15C01.0020.E00303	DN20
15C01.0025.E00302	DN25
15C01.0032.E00302	DN32
15C01.0040.E00302	DN40
15C01.0050.E00302	DN50

Ball Valves and Spare Parts

Type 15C01 - Ball set

consisting of:
· 1x Ball stainless steel
· 2x Seats PCTFE
· 3x Cylinder screws stainless steel (head piece top)
· 1x Cylinder screw stainless steel (locking lever)
· 4x Cylinder screws stainless steel (head piece bottom)
· 8x Cylinder screws stainless steel (side parts)
· 2x Body gaskets PCTFE (bonnet extension) / PTFE (without bonnet extension)
· 1x Lower stem bearing PTFE/Glass fibre (25%)
· 1x Bonnet gasket PCTFE
· 2x Lock nuts stainless steel
· 1x Nut lock cover stainless steel
· 1x Thrust washer PTFE/Glass fibre (25%)
· 1x Hex nut stainless steel
· 2x Belleville washer stainless steel
· 1x Toothed lock washer stainless steel
· 1x Gland packing Graphite/PTFE
· 1x Gland stainless steel
· 12x Spring washer stainless steel

Part No. 15C01.X.E00401

Part No. 15C01.X.E00402 (Version without bonnet extension)

suitable for:

Type	Nominal size
15C01	DN10 - DN50

Type 15C01	Technical data							
Nominal size	**DN**	**10**	**15**	**20**	**25**	**32**	**40**	**50**
Dimension code	.X.	0010	0015	0020	0025	0032	0040	0050

Ball Valves and Spare Parts

Type 15C01/02 - Ball Valve full bore

Cryogenic Ball Valve

Bidirectional ball valve
Socket weld connection for stainless steel pipes acc. to ISO 1127 or ASTM A312
Butt weld connection for stainless steel pipes acc. to ISO 1127 or ASTM A312
Female thread type NPT acc. to ANSI 1.20.1
Female thread type G (BSPP) acc. to ISO 228/1
Marking acc. to EN 1626
Top flange to EN ISO 5211
" cleaned and degreased for oxygen service "

Available accessories:
· Lock for locking device type 55394.0019.0302

Applications:
Approved for air gases, vapours and CNG.
Working temperature: -60°C / -76°F (213K) up to +190°C / +374°F (463K)

Materials		DIN EN	ASTM
1	Body	1.4409	A 351 CF3M
2	Ball seal	Carbon filled (25%)	
3	Ball	1.4401	A 479 Grade 316
4	Side connection	1.4409	A 351 CF3M
5	Stem	1.4404	A 479 Grade 316
6	Gland packing	PTFE / Carbon filled (25%)	
7	Lever	1.4301	A 240 Grade 304

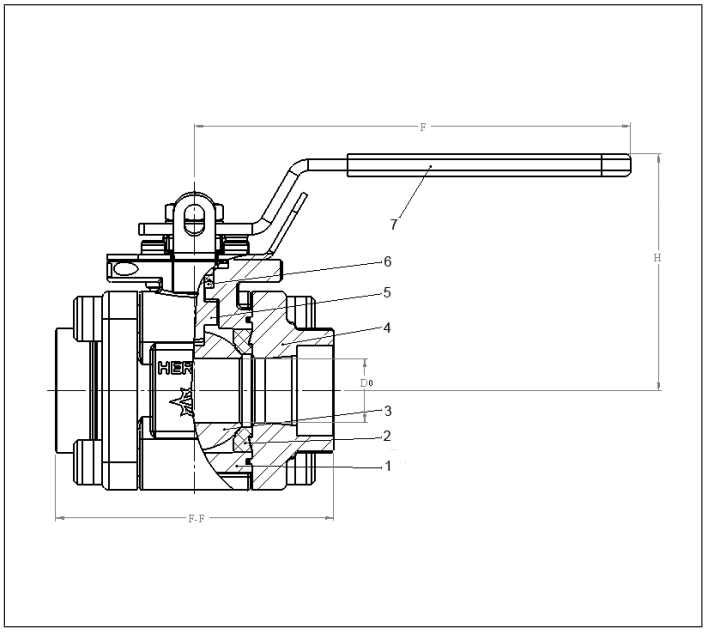

CE

Technical data - Standard design							
Nominal size [DN]	Height (H) [mm]	Orifice (D_0) [mm]	Weight [kg]	Kvs-value [m^3/h]	Cv-value [gal/min]	Length (f) [mm]	ISO 5211
10	69	8.0	1.1	5.7	6.6	127	F03
15	69	14.5	1.0	10.7	12.4	127	F03
20	80	19.5	1.8	24.7	28.6	157	F04
25	85	25.0	2.5	32.1	37.1	157	F04
32	95	32.0	3.8	77.9	90.1	240	F05
40	99	38.0	5.0	122.3	141.4	240	F05
50	141	50.0	11.4	124.1	143.7	420	F07
65	197	64.5	21.8	188.6	218.4	462.5	F10
80	233	80.0	35.7	279.8	323.7	600	F10

Type 15C01/02 - Ball Valve full bore

Connection types

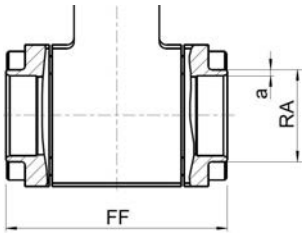

Butt weld connection acc. to
· ISO 1127

DN	Nominal Pressure [PN]	Face-to-face dim. (FF) [mm]	Outside pipe-Ø ISO (RA) [mm]	Wall thickness pipe ISO (a) [mm]	Part No.
10	100	65	13.5	2.0	15C01.A003.000020
15	100	70	21.3	2.0	15C01.A003.000026
20	100	85	26.9	2.0	15C01.A003.000032
25	70	100	33.7	2.6	15C01.A002.000026
32	70	115	42.4	2.6	15C01.A002.000032
40	70	125	48.3	3.2	15C01.A002.000038
50	70	160	60.3	3.2	15C01.A002.000044
65	30	182.5	76.1	2.9	15C02.A001.000243
80	20	218	88.9	3.2	15C02.A001.000247

Butt weld connection acc. to
· ASTM A312

DN	Nominal Pressure [PN]	Face-to-face dim. (FF) [mm]	Outside pipe-Ø ASTM (RA) [mm]	Wall thickness pipe ASTM (a) [mm]	Part No.
10	100	65	13.72	1.65	15C01.A003.000023
10	100	65	13.72	2.24	15C01.A003.000024
15	100	70	21.34	2.11	15C01.A003.000029
15	100	70	21.34	2.77	15C01.A003.000030
20	100	85	26.70	2.10	15C01.A003.000035
20	100	85	26.70	2.90	15C01.A003.000036
25	70	100	33.40	2.77	15C01.A002.000029
25	70	100	33.40	3.38	15C01.A002.000030
32	70	115	42.20	2.77	15C01.A002.000035
32	70	115	42.20	3.56	15C01.A002.000036
40	70	125	48.30	2.77	15C01.A002.000041
40	70	125	48.30	3.70	15C01.A002.000042
50	70	160	60.33	2.77	15C01.A002.000047
50	70	160	60.33	3.91	15C01.A002.000048
65	30	182.5	73.10	3.10	15C02.A001.000244
65	30	182.5	73.10	5.20	15C02.A001.000245
80	20	218	88.90	3.10	15C02.A001.000248
80	20	218	88.90	5.45	15C02.A001.000249

Type 15C01/02 - Ball Valve full bore

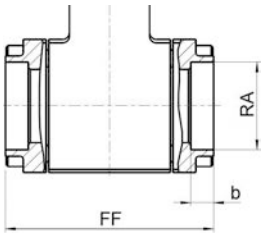

Socket weld connection acc. to
· ISO 1127
· ASTM A312

DN	Nominal Pressure [PN]	Face-to-face dim. (FF) [mm]	Socket depth (b) [mm]	Socket diameter (RA) [mm]	Part No.
10	100	65	6.0	13.5	15C01.A003.000019
15	100	70	10.0	21.3	15C01.A003.000025
20	100	85	13.0	26.9	15C01.A003.000031
25	70	100	13.0	33.7	15C01.A002.000025
32	70	115	13.0	38.0	15C01.A002.000031
40	70	125	13.0	48.3	15C01.A002.000037
50	70	160	16.0	60.3	15C01.A002.000043
65	10	182.5	16.0	77.0	15C02.A001.000242
80	10	218	16.0	90.0	15C02.A001.000246

Female thread type
· NPT acc. to ANSI 1.20.1
· G (BSPP) acc. to ISO 228/1

DN	Nominal Pressure [PN]	Face-to-face dim. (FF) [mm]	Thread size (GW) [mm]	Part No.
10	100	65	G 3/8	15C01.A003.000021
10	100	65	NPT 3/8	15C01.A003.000022
15	100	70	G 1/2	15C01.A003.000027
15	100	70	NPT 1/2	15C01.A003.000028
20	100	85	G 3/4	15C01.A003.000033
20	100	85	NPT 3/4	15C01.A003.000034
25	70	100	G 1	15C01.A002.000027
25	70	100	NPT 1	15C01.A002.000028
32	70	115	G 1 1/4	15C01.A002.000033
32	70	115	NPT 1 1/4	15C01.A002.000034
40	70	125	G 1 1/2	15C01.A002.000039
40	70	125	NPT 1 1/2	15C01.A002.000040
50	70	160	G 2	15C01.A002.000045
50	70	160	NPT 2	15C01.A002.000046

Ball Valves and Spare Parts

Type 15C01 - Ball Valve with Pneumatic Actuator

Cryogenic Ball Valve

Unidirectional ball valve to be installed in flow direction with upstream pressure relief hole.
Socket weld connection for stainless steel pipes acc. to ISO 1127 or ASTM A312
Butt weld connection for stainless steel pipes acc. to ISO 1127 or ASTM A312
Female thread type NPT acc. to ANSI 1.20.1
Female thread type G (BSPP) acc. to ISO 228/1
Marking acc. to EN 1626
Top flange to EN ISO 5211
" cleaned and degreased for oxygen service "

Actuator:
Maximum air pressure for operation: 8 bar, Minimum air pressure for operation: 6 bar (max delta P)
Connection air supply: NAMUR G1/4"
Ambient temperature limit: -20°C / -4°F (253K) up to +80°C / 176°F (353K)

Part No. 15C01.A002.XXXXXX

Available accessories:
· Limit switch
· Solenoid valve

Applications:
Approved for air gases, vapours and cryogenic liquefied gases.
Working temperature: -196°C / -321°F (77K) up to +65°C / +149°F (338K)

Materials		DIN EN	ASTM
1	Actuator	Aluminium	Aluminium
2	Adapter	1.4314	A276 Grade 304
3	Bracket	1.4314	A240 Grade 304
4	Headpiece	1.4409	A 351 CF3M
5	Screws	1.4571/A4	similar to A 194 BBT
6	Body	1.4409	A 351 CF3M
7	Side connection	1.4409	A 351 CF3M
8	Ball	1.4401	A 479 Grade 316
9	Ball seal	Carbonfilled (25%)	

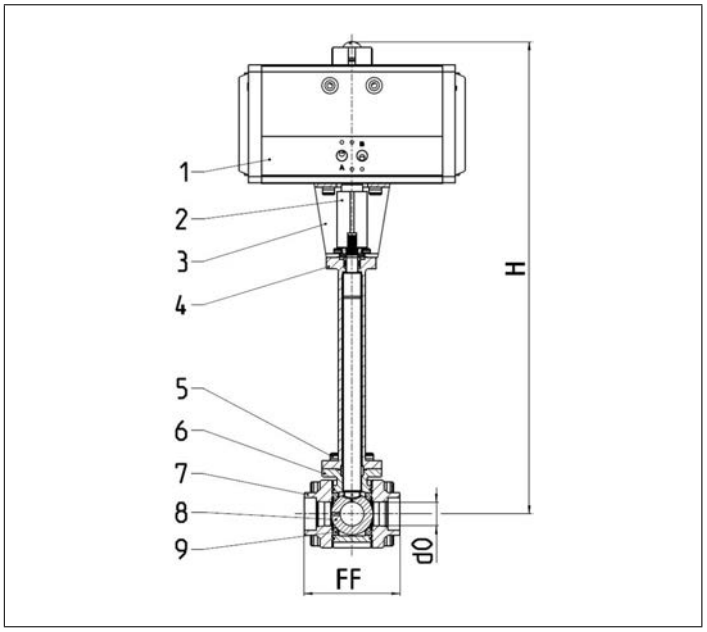

CE

Technical data - Standard design						
Nominal size [DN]	Height (H) [mm]	Orifice (D_0) [mm]	Weight [kg]	Kvs-value [m^3/h]	Cv-value [gal/min]	ISO 5211
10	441	8.0	5.5	5.7	6.6	F03
15	441	14.5	5.5	10.7	12.4	F03
20	480	19.5	9.0	24.7	28.6	F04
25	485	25.0	9.9	32.1	37.1	F04
32	579	32.0	16.0	77.9	90.1	F05
40	594	38.0	20.0	122.3	141.4	F05
50	668	50.0	35.5	124.1	143.7	F07
65	726	64.5	60.5	188.6	218.4	F10
80	920	80.0	118.7	279.8	323.7	F10

Type 15C01 - Ball Valve with Pneumatic Actuator

Connection types

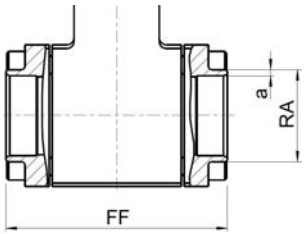

Butt weld connection acc. to
· ISO 1127

DN	Nominal Pressure [PN]	Face-to-face dim. (FF) [mm]	Outside pipe-Ø ISO (RA) [mm]	Wall thickness pipe ISO (a) [mm]	Part No.
10	100	65	13.5	2.0	15C01.A002.000201
15	100	70	21.3	2.0	15C01.A002.000207
20	100	85	26.3	2.0	15C01.A002.000213
25	70	100	33.7	2.6	15C01.A002.000219
32	70	115	42.4	2.6	15C01.A002.000225
40	70	125	48.3	3.2	15C01.A002.000231
50	70	150	60.3	3.2	15C01.A002.000237
65	50	182.5	76.1	2.9	15C01.A002.000243
80	50	218	88.9	3.2	15C01.A002.000247

Butt weld connection acc. to
· ASTM A312

DN	Nominal Pressure [PN]	Face-to-face dim. (FF) [mm]	Outside pipe-Ø ASTM (RA) [mm]	Wall thickness pipe ASTM (a) [mm]	Part No.
10	100	65	13.72	1.65	15C01.A002.000204
10	100	65	13.72	2.24	15C01.A002.000205
15	100	70	21.34	2.11	15C01.A002.000210
15	100	70	21.34	2.77	15C01.A002.000211
20	100	85	26.70	2.10	15C01.A002.000216
20	100	85	26.70	2.85	15C01.A002.000217
25	70	100	33.40	2.77	15C01.A002.000222
25	70	100	33.40	3.38	15C01.A002.000223
32	70	115	42.20	2.77	15C01.A002.000228
32	70	115	42.20	3.56	15C01.A002.000229
40	70	125	48.30	2.77	15C01.A002.000234
40	70	125	48.30	3.70	15C01.A002.000235
50	70	150	60.33	2.77	15C01.A002.000240
50	70	150	60.33	3.91	15C01.A002.000241
65	50	182.5	73.10	3.10	15C01.A002.000244
65	50	182.5	73.10	5.20	15C01.A002.000245
80	50	218	88.90	3.10	15C01.A002.000248
80	50	218	88.90	5.45	15C01.A002.000249

Type 15C01 - Ball Valve with Pneumatic Actuator

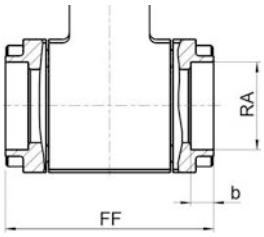

Socket weld connection acc. to
· ISO 1127
· ASTM A312

DN	Nominal Pressure [PN]	Face-to-face dim. (FF) [mm]	Socket depth (b) [mm]	Socket diameter (RA) [mm]	Part No.
10	100	65	6.0	14.1	15C01.A002.000200
15	100	70	10.0	21.3	15C01.A002.000206
20	100	85	13.0	27.5	15C01.A002.000212
25	70	100	13.0	33.7	15C01.A002.000218
32	70	115	13.0	38.2	15C01.A002.000224
40	70	125	13.0	48.7	15C01.A002.000230
50	70	150	16.0	60.3	15C01.A002.000236
65	10	182.5	16.0	77.0	15C01.A002.000242
80	10	218	16.0	90.0	15C01.A002.000246

Female thread type
· NPT acc. to ANSI 1.20.1
· G (BSPP) acc. to ISO 228/1

DN	Nominal Pressure [PN]	Face-to-face dim. (FF) [mm]	Thread size (GW) [mm]	Part No.
10	100	65	G 3/8	15C01.A002.000202
10	100	65	NPT 3/8	15C01.A002.000203
15	100	70	G 1/2	15C01.A002.000208
15	100	70	NPT 1/2	15C01.A002.000209
20	100	85	G 3/4	15C01.A002.000214
20	100	85	NPT 3/4	15C01.A002.000215
25	70	100	G 1	15C01.A002.000220
25	70	100	NPT 1	15C01.A002.000221
32	70	115	G 1 1/4	15C01.A002.000226
32	70	115	NPT 1 1/4	15C01.A002.000227
40	70	125	G 1 1/2	15C01.A002.000232
40	70	125	NPT 1 1/2	15C01.A002.000233
50	70	150	G 2	15C01.A002.000238
50	70	150	NPT 2	15C01.A002.000239

Type 15C02 - Ball Valve with Pneumatic Actuator

Cryogenic Ball Valve

Bidirectional ball valve
Socket weld connection for stainless steel pipes acc. to ISO 1127 or ASTM A312
Butt weld connection for stainless steel pipes acc. to ISO 1127 or ASTM A312
Female thread type NPT acc. to ANSI 1.20.1
Female thread type G (BSPP) acc. to ISO 228/1
Marking acc. to EN 1626
Top flange to EN ISO 5211
" cleaned and degreased for oxygen service "

Actuator:
Maximum air pressure for operation: 8 bar
Minimum air pressure for operation: 6 bar (max delta P)
Connection air supply: NAMUR G1/4"
Ambient temperature limit: -20°C / -4°F (253K) up to +80°C / 176°F (353K)

Part No. 15C02.A002.XXXXXX

Available accessories:
· Limit switch
· Solenoid valve

Applications:
Approved for air gases, vapours and CNG.
Working temperature: -60°C / -76°F (213K) up to +190°C / +374°F (463K)

Materials		DIN EN	ASTM
1	Actuator	Aluminium	Aluminium
2	Adapter	1.4314	A276 Grade 304
3	Bracket	1.4314	A240 Grade 304
4	Screws	1.4571/A4	similar A 194 BBT
5	Body	1.4409	A 351 CF3M
6	Side connection	1.4409	A 351 CF3M
7	Ball	1.4401	A 479 Grade 316
8	Ball seal	Carbonfilled (25%)	

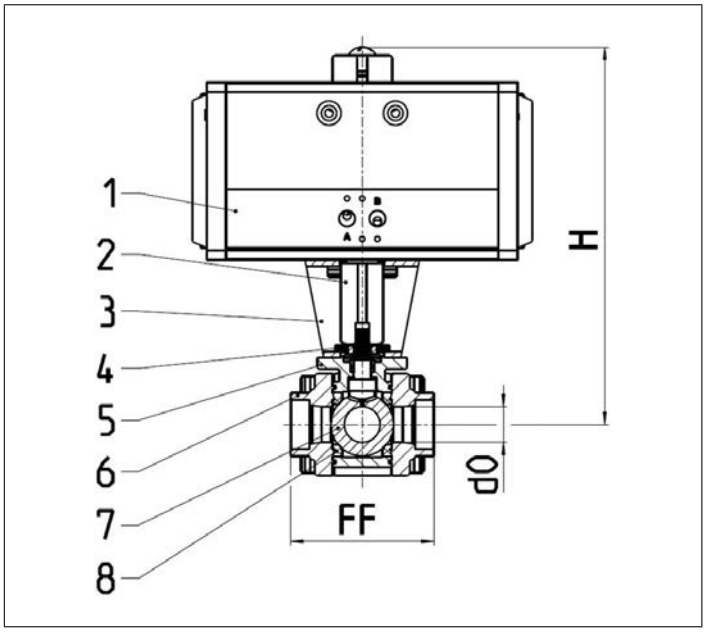

Technical data - Standard design						
Nominal size [DN]	**Height (H) [mm]**	**Orifice (D_0) [mm]**	**Weight [kg]**	**Kvs-value [m^3/h]**	**Cv-value [gal/min]**	**ISO 5211**
10	217	8.0	4.0	5.7	6.6	F03
15	217	14.5	4.0	10.7	12.4	F03
20	256	19.5	7.8	24.7	28.6	F04
25	261	25.0	8.5	32.1	37.1	F04
32	279	32.0	10.5	77.9	90.1	F05
40	303	38.0	14.4	122.3	141.4	F05
50	331	50.0	21.0	124.1	143.7	F07
65	435	64.5	52.5	188.6	218.4	F10
80	458	80.0	65.7	279.8	323.7	F10

Type 15C02 - Ball Valve with Pneumatic Actuator

Connection types

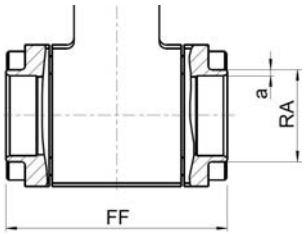

Butt weld connection acc. to
· ISO 1127

DN	Nominal Pressure [PN]	Face-to-face dim. (FF) [mm]	Outside pipe-Ø ISO (RA) [mm]	Wall thickness pipe ISO (a) [mm]	Part No.
10	100	65	13.5	2.0	15C02.A002.000201
15	100	70	21.3	2.0	15C02.A002.000207
20	100	85	26.3	2.0	15C02.A002.000213
25	70	100	33.7	2.6	15C02.A002.000219
32	70	115	42.4	2.6	15C02.A002.000225
40	70	125	48.3	3.2	15C02.A002.000231
50	70	160	60.3	3.2	15C02.A002.000237
65	50	182.5	76.1	2.9	15C02.A002.000243
80	50	218	88.9	3.2	15C02.A002.000247

Butt weld connection acc. to
· ASTM A312

DN	Nominal Pressure [PN]	Face-to-face dim. (FF) [mm]	Outside pipe-Ø ASTM (RA) [mm]	Wall thickness pipe ASTM (a) [mm]	Part No.
10	100	65	13.72	1.65	15C02.A002.000204
10	100	65	13.72	2.24	15C02.A002.000205
15	100	70	21.34	2.11	15C02.A002.000210
15	100	70	21.34	2.77	15C02.A002.000211
20	100	85	26.70	2.10	15C02.A002.000216
20	100	85	26.70	2.85	15C02.A002.000217
25	70	100	33.40	2.77	15C02.A002.000222
25	70	100	33.40	3.38	15C02.A002.000223
32	70	115	42.20	2.77	15C02.A002.000228
32	70	115	42.20	3.56	15C02.A002.000229
40	70	125	48.30	2.77	15C02.A002.000234
40	70	125	48.30	3.70	15C02.A002.000235
50	70	160	60.33	2.77	15C02.A002.000240
50	70	160	60.33	3.91	15C02.A002.000241
65	50	182.5	73.10	3.10	15C02.A002.000244
65	50	182.5	73.10	5.20	15C02.A002.000245
80	50	218	88.90	3.10	15C02.A002.000248
80	50	218	88.90	5.45	15C02.A002.000249

Type 15C02 - Ball Valve with Pneumatic Actuator

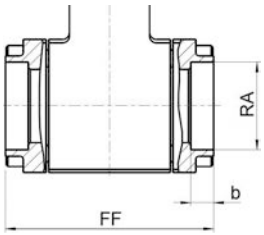

Socket weld connection acc. to
· ISO 1127
· ASTM A312

DN	Nominal Pressure [PN]	Face-to-face dim. (FF) [mm]	Socket depth (b) [mm]	Socket diameter (RA) [mm]	Part No.
10	100	65	6.0	14.1	15C02.A002.000200
15	100	70	10.0	21.3	15C02.A002.000206
20	100	85	13.0	27.5	15C02.A002.000212
25	70	100	13.0	33.7	15C02.A002.000218
32	70	115	13.0	38.2	15C02.A002.000224
40	70	125	13.0	48.7	15C02.A002.000230
50	70	160	16.0	60.3	15C02.A002.000236
65	10	182.5	16.0	77.0	15C02.A002.000242
80	10	218	16.0	90.0	15C02.A002.000246

Female thread type
· NPT acc. to ANSI 1.20.1
· G (BSPP) acc. to ISO 228/1

DN	Nominal Pressure [PN]	Face-to-face dim. (FF) [mm]	Thread size (GW) [mm]	Part No.
10	100	65	G 3/8	15C02.A002.000202
10	100	65	NPT 3/8	15C02.A002.000203
15	100	70	G 1/2	15C02.A002.000208
15	100	70	NPT 1/2	15C02.A002.000209
20	100	85	G 3/4	15C02.A002.000214
20	100	85	NPT 3/4	15C02.A002.000215
25	70	100	G 1	15C02.A002.000220
25	70	100	NPT 1	15C02.A002.000221
32	70	115	G 1 1/4	15C02.A002.000226
32	70	115	NPT 1 1/4	15C02.A002.000227
40	70	125	G 1 1/2	15C02.A002.000232
40	70	125	NPT 1 1/2	15C02.A002.000233
50	70	160	G 2	15C02.A002.000238
50	70	160	NPT 2	15C02.A002.000239

Actuated Valves and Actuators

Type 01313 - Actuated Globe Valve

Cryogenic-Globe Valves with Pneumatic Actuator, PN50

Bronze body and stainless steel topwork (internal parts bronze)
Actuator - air opens, spring closes or contrary
" live loaded " gland packing
" cleaned and degreased for oxygen service " - the actuator is not cleaned and degreased for oxygen

Part No. 01313.X.*010
Socket end for copper pipes acc. to DIN EN 12449 or ASTM B88

Available accessories:
· Solenoid valve
· Limit switch
· Electropneumatic positioner etc.

Available options - on request only:
· Socket end for stainless steel pipes acc. to ISO 1127
· Actuator " cleaned and degreased for oxygen sevice "
· Electric actuator
· Valve with check disc

Applications:
Approved for air gases, vapours and cryogenic liquefied gases incl. LNG.
Working temperature: -196°C / -321°F (77K) up to +120°C / +248°F (393K)

Materials		DIN EN	ASTM
1	Body	CC491K	B 62 UNS C83600
2	Valve seal	PTFE / Carbon filled (25%)	
3	Disc	CW614N	B 283 UNS C38500
4	Bonnet gasket	PTFE	
5	Headpiece	1.4301	A 276 Grade 304
6	Bolts	1.4301/A2	A 194 B8
7	Elongation tube	1.4541	A 213 TP 321
8	Stem	1.4301	A 276 Grade 304
9	Gland packing	Graphite / PTFE / MICA	
10	Gland nut	CW614N	B 283 UNS C38500
11	Pillars	1.4404	A 276 Grade 316L
12	Bush	CW452K	B 159 UNS C51900

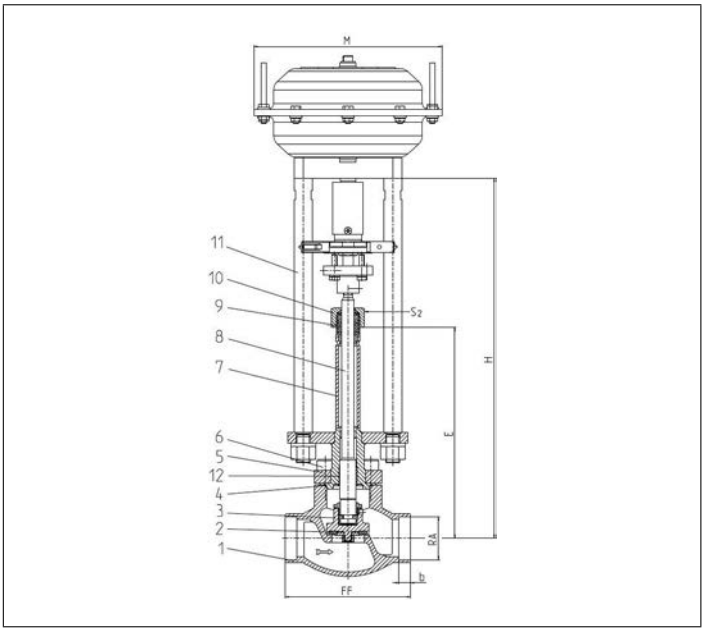

Type 01313 - Standard design	Technical data							
Nominal size	**DN**	**10**	**15**	**20**	**25**	**32**	**40**	**50**
Dimension code	.X.	X=DNRA, Example: valve DN 15 for copper pipe RA Ø 18mm, X=1518						
Face-to-face dimension	FF	60	85	85	115	115	140	160
Height	H	370	370	370	375	405	420	425
Length	E	195	195	200	200	230	230	235
Outside pipe-Ø	RA	dependent on order						
Socket depth	b	6	6	8	8	10	13	20
Actuator-Ø	M	dependent on actuator						
Wrench size across flats	S_2	30	30	30	30	36	36	36
Weight w/o actuator	ca. kg	1.6	2.3	2.7	3.1	4.3	6.2	9.2
*Kvs-Value	m^3/h	1.6	4.3	6.7	11.5	12.1	22.6	37.1
*Cv-Value	gal/min	1.9	5.0	7.8	13.4	14.1	26.3	43.2
Stroke	mm	10	10	7	9	9	11	15

Dimensions in mm. * These figures refer to measurements for the flow direction.

Actuated Valves and Actuators

Type 01313 - Actuated Globe Valve

Cryogenic-Globe Valves with Pneumatic Actuator, PN50

Bronze body and stainless steel topwork (internal parts bronze)
Actuator - air opens, spring closes or contrary
" live loaded " gland packing
" cleaned and degreased for oxygen service " - the actuator is not cleaned and degreased for oxygen

Part No. 01313.X.*017
Complete with stainless steel stubs acc. to DIN EN 10216-5 or ASTM A312

Available accessories:
· Solenoid valve
· Limit switch
· Electropneumatic positioner etc.

Available options - on request only:
· Actuator " cleaned and degreased for oxygen sevice "
· Electric actuator
· Valve with check disc
· Valve with control disc (tapered design)
· Further pipe wall thicknesses

Applications:
Approved for air gases, vapours and cryogenic liquefied gases incl. LNG.
Working temperature: -196°C / -321°F (77K) up to +120°C / +248°F (393K)

Materials		DIN EN	ASTM
1	Body	CC491K	B 62 UNS C83600
2	Valve seal	PTFE / Carbon filled (25%)	
3	Disc	CW614N	B 283 UNS C38500
4	Bonnet gasket	PTFE	
5	Headpiece	1.4301	A 276 Grade 304
6	Bolts	1.4301/A2	A 194 B8
7	Elongation tube	1.4541	A 213 TP 321
8	Stem	1.4301	A 276 Grade 304
9	Gland packing	Graphite / PTFE / MICA	
10	Gland nut	CW614N	B 283 UNS C38500
11	Pillars	1.4404	A 276 Grade 316L
12	Bush	CW452K	B 159 UNS C51900
13	Stainless steel stubs	1.4306	A 312 TP304L

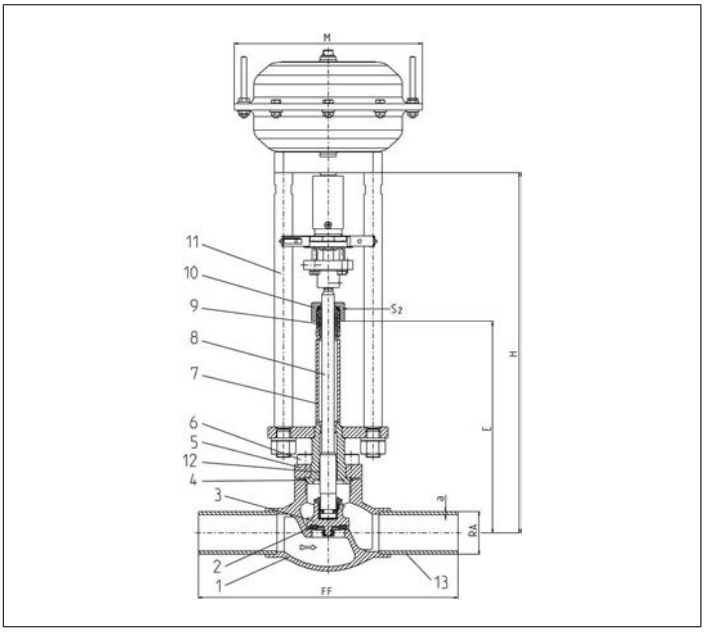

Type 01313 - Standard design	Technical data								
Nominal size	**DN**	**10**	**10**	**15**	**20**	**25**	**32**	**40**	**50**
Dimension code	.X.	1012	1017	1521	2027	2533	3242	4048	5060
Face-to-face dimension	FF	210	210	235	235	265	265	290	310
Height	H	370	370	370	370	375	405	420	425
Length	E	195	195	195	200	200	230	230	235
Outside pipe-Ø ISO 1127	RA	12.0	17.2	21.3	26.9	33.7	42.4	48.3	60.3
Wall thickness pipe ISO 1127	a	1.0	2.3	2.6	2.9	3.2	3.2	3.6	3.6
Outside pipe-Ø ASTM A312	RA	-	17.15	21.34	26.67	33.4	42.16	48.26	60.33
Wall thickness pipe ASTM A312	a	dimensions acc. to S10 or S40							
Actuator-Ø	M	dependent on actuator							
Wrench size across flats	S_2	30	30	30	30	30	36	36	36
Weight w/o actuator	ca. kg	1.75	1.85	2.6	3.0	3.5	4.7	6.7	9.8
*Kvs-Value	m^3/h	1.6	2.2	4.3	6.7	11.5	12.1	22.6	37.1
*Cv-Value	gal/min	1.9	2.6	5.0	7.8	13.4	14.1	26.3	43.2
Stroke	mm	10	10	10	7	9	9	11	15

Dimensions in mm. * These figures refer to measurements for the flow direction.

Edition 2022-11

Actuated Valves and Actuators

Type 01314 - Actuated Globe Valve

Cryogenic-Globe Valves with Pneumatic Actuator, PN50

Bronze body and stainless steel topwork (internal parts bronze)
Actuator - air opens, spring closes or contrary
" live loaded " gland packing
" cleaned and degreased for oxygen service " - the actuator is not cleaned and degreased for oxygen

Part No. 01314.X.*011
Female thread connection (G) acc. to ISO 228/1

Part No. 01314.X.*016
Female thread connection NPT acc. to ANSI B 1.20.1

Available accessories:
· Solenoid valve
· Limit switch
· Electropneumatic positioner etc.

Available options - on request only:
· Actuator " cleaned and degreased for oxygen sevice "
· Electric actuator · Valve with check disc

Applications:
Approved for air gases, vapours and cryogenic liquefied gases incl. LNG.
Working temperature: -196°C / -321°F (77K) up to +120°C / +248°F (393K)

Materials		DIN EN	ASTM
1	Body	CC491K	B 62 UNS C83600
2	Valve seal	PTFE / Carbon filled (25%)	
3	Disc	CW614N	B 283 UNS C38500
4	Bonnet gasket	PTFE	
5	Headpiece	1.4301	A 276 Grade 304
6	Bolts	1.4301/A2	A 194 B8
7	Elongation tube	1.4541	A 213 TP 321
8	Stem	1.4301	A 276 Grade 304
9	Gland packing	Graphite / PTFE / MICA	
10	Gland nut	CW614N	B 283 UNS C38500
11	Pillars	1.4404	A 276 Grade 316L
12	Bush	CW452K	B 159 UNS C51900

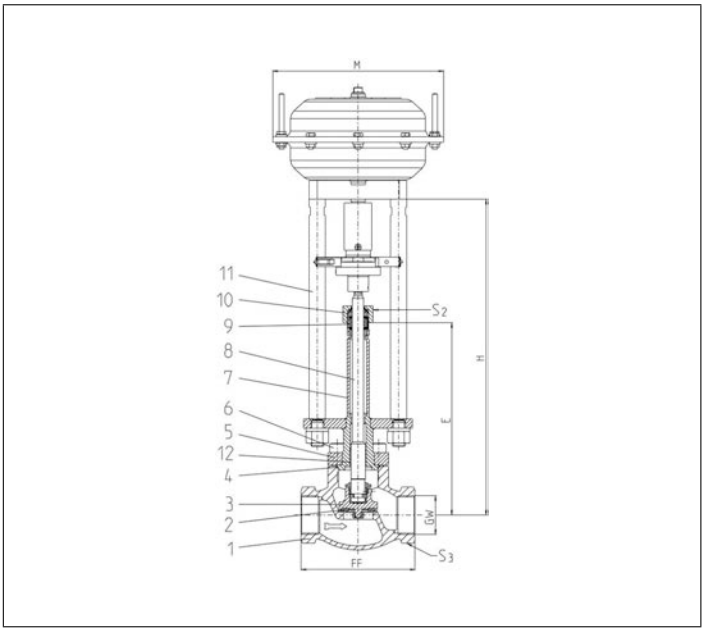

Type 01314 - Standard design	Technical data								
Nominal size	**DN**	**10**	**10**	**15**	**20**	**25**	**32**	**40**	**50**
Thread size	GW	1/4	3/8	1/2	3/4	1	1-1/4	1-1/2	2
Dimension code	.X.	0200	0300	0400	0600	1000	1200	1400	2000
Face-to-face dimension	FF	60	60	85	85	115	115	140	160
Height	H	370	370	370	370	375	405	420	425
Length	E	195	195	195	200	200	230	230	235
Actuator-Ø	M	dependent on actuator							
Wrench size across flats	S_2	30	30	30	30	30	36	36	36
Wrench size across flats	S_3	rund	rund	30	36	41	rund	60	75
Weight w/o actuator	ca. kg	1.6	1.6	2.3	2.7	3.1	4.3	6.2	9.2
*Kvs-Value	m^3/h	1.6	2.2	4.3	6.7	11.5	12.1	22.6	37.1
*Cv-Value	gal/min	1.9	2.6	5.0	7.8	13.4	14.1	26.3	43.2

Dimensions in mm. * These figures refer to measurements for the flow direction.

Actuated Valves and Actuators

Type 02413 - Actuated Globe Valve

Cryogenic-Globe Valves with Pneumatic Actuator, PN50

Bronze body and stainless steel topwork, inner parts in brass
Actuator - air opens, spring closes or contrary
" live loaded " gland packing
" cleaned and degreased for oxygen service " - the actuator is not cleaned and degreased for oxygen

Part No. 02413.X.*011
Male thread for union connection

Available accessories:
· Solenoid valve
· Limit switch
· Electropneumatic positioner etc.

Available options - on request only:
· Socket end for stainless steel pipes acc. to ISO 1127
· Actuator " cleaned and degreased for oxygen sevice "
· Electric actuator
· Valve with check disc

Applications:
Approved for air gases, vapours and cryogenic liquefied gases incl. LNG.
Working temperature: -196°C / -321°F (77K) up to +120°C / +248°F (393K)

Materials		DIN EN	ASTM
1	Body	CC491K	B 62 UNS C83600
2	Valve seal	PTFE / Carbon filled (25%)	
3	Disc	CW614N	B 283 UNS C38500
4	Bonnet gasket	PTFE	
5	Headpiece	1.4301	A 276 Grade 304
6	Bolts	1.4301/A2	A 194 B8
7	Elongation tube	1.4541	A 213 TP 321
8	Stem	1.4301	A 276 Grade 304
9	Gland packing	Graphite / PTFE / MICA	
10	Gland nut	CW614N	B 283 UNS C38500
11	Pillars	1.4404	A 276 Grade 316L
12	Bush	CW452K	B 159 UNS C51900

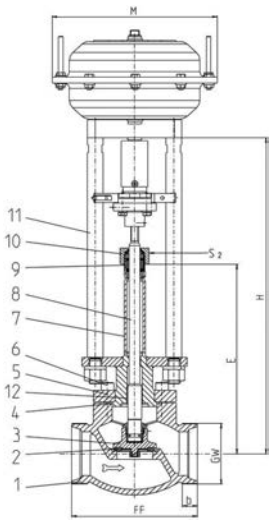

Type 02413 - Standard design	Technical data					
Nominal size	**DN**	**10**	**20**	**32**	**40**	**50**
Dimension code	.X.	0100	0200	0320	0400	0500
Face-to-face dimension	FF	60	85	115	140	160
Union thread	GW	M26x1.5	M40x2.0	M55x2.0	M65x2.0	M78x2.0
Height	H	370	370	405	420	425
Length	E	195	200	230	230	235
Thread length	b	10	11	14	17	20
Actuator-Ø	M	dependent on actuator				
Wrench size across flats	S_2	30	30	36	36	36
Weight w/o actuator	ca. kg	1.6	2.7	4.3	6.2	9.2
*Kvs-Value	m^3/h	2.2	6.7	12.1	22.6	37.1
*Cv-Value	gal/min	2.6	7.8	14.1	26.3	43.2
Stroke	mm	10	7	9	11	15

Dimensions in mm. * These figures refer to measurements for the flow direction.

Edition 2022-11

Actuated Valves and Actuators

Type 01343 - Actuated Globe Valve

Cryogenic-Globe Valves with Pneumatic Actuator, PN50 (DN65=PN45, DN150=PN40)

Stainless steel body and topwork
Actuator - air opens, spring closes or contrary
" live loaded " gland packing
" cleaned and degreased for oxygen service " - the actuator is not cleaned and degreased for oxygen

Part No. 01343.X.*01*
Butt weld connection for stainless steel pipes acc. to ISO 1127 or ASTM A312
Part No. 01343.X.*014
Socket weld connection for stainless steel pipes acc. to ISO 1127 or ASTM A312

Available accessories:
· Solenoid valve · Limit switch
· Electropneumatic positioner etc.

Available options - on request only:
· Welded stainless steel stubs acc. to ISO 1127 or ASTM A312 - length FF + 200mm
· Actuator " cleaned and degreased for oxygen service "
· Electric actuator · Valve with check disc, valve with control disc (tapered design)
· Further pipe wall thicknesses

Applications:
Approved for air gases, vapours and cryogenic liquefied gases incl. LNG.
Working temperature: -196°C / -321°F (77K) up to +120°C / +248°F (393K)

Materials		DIN EN	ASTM
1	Body	1.4308	A 351 CF8
2	Valve seal up to DN50	PTFE / Carbon filled (25%)	
2a	Valve seal from DN65	PTFE	
3	Disc	1.4301	A 276 Grade 304
4	Bonnet gasket	PTFE	
5	Headpiece	1.4301	A 276 Grade 304
6	Bolts	1.4301/A2	A 194 B8
7	Elongation tube	1.4541	A 213 TP 321
8	Stem	1.4301	A 276 Grade 304
9	Gland packing	Graphite / PTFE / MICA	
10	Gland nut	1.4305	A 276 Grade 303
11	Pillars	1.4404	A 276 Grade 316L
12	Bush	CW452K	B 159 UNS C51900
13	Spring	CW452K	B 159 UNS C51900

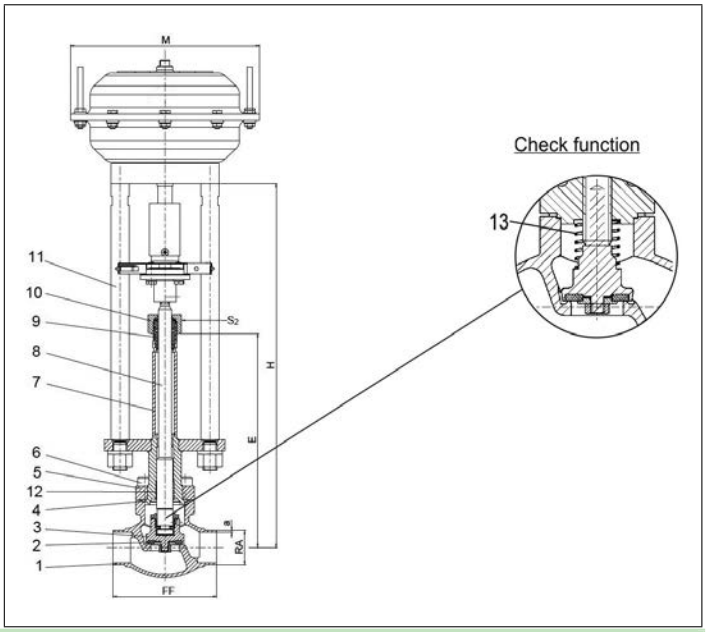

KOREA GAS SAFETY CORPORATION

Type 01343 - Standard design	Technical data													
Nominal size	**DN**	**10**	**15**	**15**	**20**	**25**	**32**	**40**	**40**	**50**	**65**	**80**	**100**	**150**
Dimension code	.X.	1012	1517	1521	2026	2533	3238	4042	4048	5060	657x	8088	0114	0168
Face-to-face dimension	FF	70	85	85	100	115	115	130	130	155	205	245	280	400
Height	H	370	370	370	370	375	405	420	420	425	510	575	635	685
Length	E	195	195	195	200	200	230	230	230	235	300	300	300	350
Outside pipe-Ø ISO 1127	RA	12.0	17.2	21.3	26.9	33.7	38.0	42.4	48.3	60.3	76.1	88.9	114.3	168.3
Wall thickness pipe ISO 1127	a	1.0	1.6	2.0	2.0	2.0	2.0	2.0	2.0	2.0	2.9	3.2	6.0	7.1
Outside pipe-Ø ASTM A312	RA	13.72	17.15	21.34	26.67	33.40	-	42.16	48.26	60.33	73.03	88.90	114.3	168.3
Wall thickness pipe ASTM A312	a	dimensions acc. to S10 or S40												
Socket depth	b	6	10	10	13	13	-	13	13	16	16	16	20	20
Actuator-Ø	M	dependent on actuator												
Wrench size across flats	S_2	30	30	30	30	30	36	36	36	36	36	36	41	41
Weight w/o actuator	ca. kg	1.9	2.15	2.2	2.4	3.1	3.8	6.5	6.5	9.0	15.2	20.0	28.0	60.9
*Kvs-Value	m^3/h	1.6	3.8	4.3	6.7	11.5	14.0	20.6	22.6	37.1	71.1	104.0	170.0	350.0
*Cv-Value	gal/min	1.9	4.4	5.0	7.8	13.4	16.2	23.9	26.3	43.2	82.9	121.3	198.3	408.4
Stroke	mm	10	10	10	7	9	9	11	11	15	23	23	30	40

Dimensions in mm. Compliance of tightness requirements acc. to EN 1626 for DN150 up to 20 bar differential pressure. In the range of >20-40 bar, 350-700ml per second (1 bar, 20°C [68°F]) are reached.* These figures refer to measurements for the flow direction.

Actuated Valves and Actuators

Type 01343 - Actuated Globe Valve

Cryogenic-Globe Valves with Pneumatic Actuator, PN50 (DN150=PN40)

Stainless steel body and topwork
Actuator - air opens, spring closes or contrary
" live loaded " gland packing
" cleaned and degreased for oxygen service " - the standard actuator is not cleaned and degreased for oxygen
Part No. 01343.X.0010
possible connections:
· Butt weld connection for stainless steel pipes acc. to ISO 1127 or ASTM A312
· Socket weld connection for stainless steel pipes acc. to ISO 1127 or ASTM A312
· Female thread connection (G) acc. to ISO 228/1 or NPT acc. to ANSI B 1.20.1
Please specify the required connection when ordering!
Available options - on request only:
· Solenoid valves · Electropneumatic positioner
· Inductive Proximity Switches · Position and Limit Switches · Air control sets
· Welded stainless steel stubs acc. to ISO 1127 or ASTM A312 - length FF + 200mm
· Actuator " cleaned and degreased for oxygen service " · Electric actuator
· Valve with check disc · valve with control disc (tapered design)
· Further pipe wall thicknesses
Applications:
Approved for air gases, vapours and cryogenic liquefied gases incl. LNG.
Working temperature: -196°C / -321°F (77K) up to +120°C / +248°F (393K)

Materials		DIN EN	ASTM
1	Body	1.4308	A 351 CF8
2	Valve seal up to DN50	PTFE / Carbon filled (25%)	
2a	Valve seal from DN65	PTFE	
3	Disc	1.4301	A 276 Grade 304
4	Bonnet Gasket	PTFE	
5	Headpiece	1.4301	A 276 Grade 304
6	Bolts	1.4301/A2	A 194 B8
7	Elongation tube	1.4541	A 213 TP 321
8	Stem	1.4301	A 276 Grade 304
9	Gland packing	Graphite / PTFE / MICA	
10	Gland nut	1.4305	A 276 Grade 303
11	Pillars	1.4404	A 276 Grade 316L
12	Bush	CW452K	B 159 UNS C51900
13	Spring	CW452K	B 159 UNS C51900

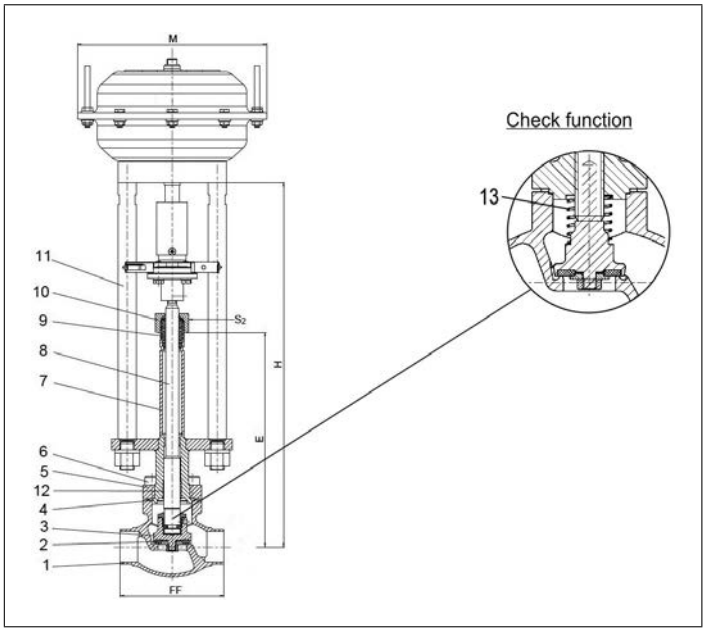

KOREA GAS SAFETY CORPORATION

Type 01343 - Standard design	Technical Data											
Nominal size	**DN**	**10**	**15**	**20**	**25**	**32**	**40**	**50**	**65**	**80**	**100**	**150**
Dimension code	.X.	0100	0150	0200	0250	0320	0400	0500	0650	0800	1000	1500
Face-to-face dimension	FF	70	85	100	115	115	130	155	205	245	280	400
Height	H	370	370	370	375	405	420	425	510	575	635	685
Length	E	195	195	200	200	230	230	235	300	300	300	350
Actuator-Ø	M	dependent on actuator										
Wrench size across flats	S_2	30	30	30	30	36	36	36	36	36	41	41
Weight w/o actuator	ca. kg	1.9	2.15	2.4	3.1	3.8	6.5	9.0	15.2	20.0	28.0	60.9
Stroke	mm	10	10	7	9	9	11	15	23	23	30	40

Dimensions in mm. Compliance of tightness requirements acc. to EN 1626 for DN150 up to 20 bar differential pressure. In the range of >20-40 bar, 350-700ml per second (1 bar, 20°C [68°F]) are reached.* These figures refer to measurements for the flow direction.

Edition 2022-11

Type 01343 - Actuated Globe Valve

Connection types

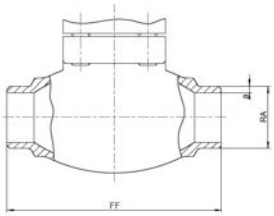

Butt weld connection acc. to
· ISO 1127

DN	Face-to-face dim. (FF) [mm]	Outside pipe-Ø ISO (RA) [mm]	Wall thickness pipe ISO (a) [mm]	*Kvs-value [m³/h]	*Cv-value [gal/min]	**Weight w.a. [kg]	Order reference
10	70	13.5	1.0	1.6	1.9	1.9	BW 13.5x1.0
15	85	17.2	1.6	3.8	4.4	2.2	BW 17.2x1.6
15	85	21.3	2.0	4.3	5.0	2.2	BW 21.3x2.0
20	100	26.9	2.0	6.7	7.8	2.4	BW 26.9x2.0
25	115	33.7	2.0	11.5	13.4	3.1	BW 33.7x2.0
32	115	38.0	2.0	14.0	16.2	3.8	BW 38.0x2.0
40	130	42.4	2.0	20.6	23.9	6.5	BW 42.4x2.0
40	130	48.3	2.0	22.6	26.3	6.5	BW 48.3x2.0
50	155	60.3	2.0	37.1	43.2	9.0	BW 60.3x2.0
65	205	76.1	2.6	71.1	82.9	15.2	BW 76.1x2.6
80	245	88.9	3.2	104.0	121.3	20.0	BW 88.9x3.2
100	280	114.3	6.0	170.0	198.3	28.0	BW 114.3x6.0
150	400	168.3	7.1	350.0	408.4	60.9	BW 168.3x7.1

Butt weld connection acc. to
· ASTM A312

	DN	Face-to-face dim. (FF) [mm]	Outside pipe-Ø ASTM (RA) [inch / mm]	Wall thickness pipe ASTM (a) [mm]	*Kvs-value [m³/h]	*Cv-value [gal/min]	**Weight w.a. [kg]	Order reference
	10	70	1/4" / 13.72	1.65	1.6	1.9	1.9	BW 13.72x1.65
	15	85	1/2" / 17.15	1.65	3.8	4.4	2.2	BW 17.15x1.65
	15	85	1/2" / 21.34	2.11	4.3	5.0	2.2	BW 21.34x2.11
	20	100	3/4" / 26.67	2.11	6.7	7.8	2.4	BW 26.67x2.11
	25	115	1" / 33.40	2.77	11.5	13.4	3.1	BW 33.40x2.77
	40	130	1-1/2" / 42.16	2.77	20.6	23.9	6.5	BW 42.16x2.77
S10	**40**	130	1-1/2" / 48.26	2.77	22.6	26.3	6.5	BW 48.26x2.77
	50	155	2" / 60.32	2.77	37.1	43.2	9.0	BW 60.32x2.77
	65	205	2-1/2" / 73.02	3.05	71.1	82.9	15.2	BW 73.02x3.05
	80	245	3" / 88.90	3.05	104.0	121.3	20.0	BW 88.90x3.05
	100	280	4" / 114.30	3.05	170.0	198.3	28.0	BW 114.30x3.05
	150	400	6" / 168.27	3.40	350.0	408.4	60.9	BW 168.27x3.40
	10	70	1/4" / 13.72	2.24	1.6	1.9	1.9	BW 13.72x2.24
	15	85	1/2" / 17.15	2.31	3.8	4.4	2.2	BW 17.15x2.31
	15	85	1/2" / 21.34	2.77	4.3	5.0	2.2	BW 21.34x2.77
	20	100	3/4" / 26.67	2.87	6.7	7.8	2.4	BW 26.67x2.87
	25	115	1" / 33.40	3.38	11.5	13.4	3.1	BW 33.40x3.38
S40	**40**	130	1-1/2" / 42.16	3.56	20.6	23.9	6.5	BW 42.16x3.56
	40	130	1-1/2" / 48.26	3.68	22.6	26.3	6.5	BW 48.26x3.68
	50	155	2" / 60.32	3.91	37.1	43.2	9.0	BW 60.32x3.91
	65	205	2-1/2" / 73.02	5.16	71.1	82.9	15.2	BW 73.02x5.16
	80	245	3" / 88.90	5.49	104.0	121.3	20.0	BW 88.90x5.49
	100	280	4" / 114.30	6.02	170.0	198.3	28.0	BW 114.30x6.02
	150	400	6" / 168.27	7.11	350.0	408.4	60.9	BW 168.27x7.11

* These figures refer to measurements for the flow direction.
** w.a. = without actuator

Type 01343 - Actuated Globe Valve

Connection types

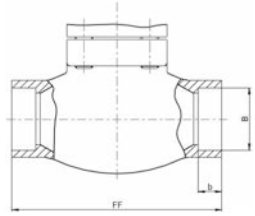

Socket weld connection acc. to
· ISO 1127
· ASTM A312

DN	Face-to-face dim. (FF) [mm]	Socket depth (b) [mm]	Socket diameter (B) [mm]	*Kvs-value [m^3/h]	*Cv-value [gal/min]	**Weight, w.a. [kg]	order reference [ØISO / ØASTM]
10	70	6	14.1	1.6	1.9	1.9	SW 13.5 / 13.72
15	85	10	17.5	3.8	4.4	2.2	SW 17.2 / 17.15
15	85	10	21.5	4.3	5.0	2.2	SW 21.3 / 21.34
20	100	13	27.5	6.7	7.8	2.4	SW 26.9 / 26.67
25	115	13	34.1	11.5	13.4	3.1	SW 33.7 / 33.4
40	130	13	42.8	20.6	23.9	6.5	SW 42.4 / 42.16
40	130	13	48.6	22.6	26.3	6.5	SW 48.3 / 48.26
50	155	16	61.1	37.1	43.2	9.0	SW 60.3 / 60.32
65	205	16	74.0	71.1	82.9	15.1	SW 73.02
65	205	16	76.8	71.1	82.9	15.2	SW 76.1
80	245	16	90.0	104.0	121.3	20.0	SW 88.9
100	280	20	114.8	170.0	198.3	28.0	SW 114.3
150	400	20	168.2	350.0	408.4	60.9	SW 168.3 / 168.27

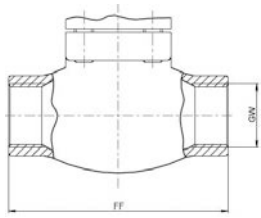

Female thread connection acc. to
· ISO 228/1 (G)
· NPT acc. to ANSI B 1.20.1 (NPT)

DN	Face-to-face dim. (FF) [mm]	Thread size (GW)	*Kvs-value [m^3/h]	*Cv-value [gal/min]	**Weight, w.a. [kg]	order reference G-Thread	order reference NPT-Thread
10	70	1/4"	1.6	1.9	1.9	1/4 BSPP	1/4" NPT
10	70	3/8"	2.2	2.6	1.9	3/8 BSPP	3/8" NPT
15	85	1/2"	4.3	5.0	2.2	1/2 BSPP	1/2" NPT
20	100	3/4"	6.7	7.8	2.4	3/4 BSPP	3/4" NPT
25	115	1"	11.5	13.4	3.1	1 BSPP	1" NPT
40	130	1-1/4"	20.6	23.9	6.5	1-1/4 BSPP	1-1/4" NPT
40	130	1-1/2"	22.6	26.3	6.5	1-1/2 BSPP	1-1/2" NPT
50	155	2"	37.1	43.2	9.0	2 BSPP	2" NPT

* These figures refer to measurements for the flow direction.
** w.a. = withour actuator

Edition 2022-11

Actuated Valves and Actuators

Type 01343 - Actuated Globe Valve

Cryogenic-Globe Valves with Pneumatic Actuator, PN25

Stainless steel body and topwork
Actuator - air opens, spring closes or contrary
" live loaded " gland packing

Part No. 01343.0219.*01*
Butt weld connection for stainless steel pipes acc. to ISO 1127 or ASTM A312
Part No. 01343.0219.*014
Socket weld connection for stainless steel pipes acc. to ISO 1127 or ASTM A312

In flow direction, the valve with the nominal size DN200 is conform to tightness class L1 up to 12 bar maximum differential pressure acc. to DIN 12567 for LNG use.
This standard can also be used for the tightness class of other cryogenic gases.

Available accessories/options - on request only:
· Solenoid valve · Limit switch · Electropneumatic positioner etc.
· Welded stainless steel stubs acc. to ISO 1127 or ASTM A312
· Actuator " cleaned and degreased for oxygen service "
· Valve with check or control disc (tapered design)

Applications:
Approved for air gases, vapours and cryogenic liquefied gases incl. LNG.
Working temperature: -196°C / -321°F (77K) up to +120°C / +248°F (393K)

Materials		DIN EN	ASTM
1	Body	1.4308	A 351 CF8
2	Valve seal	PTFE	
3	Disc	1.4301	A 276 Grade 304
4	Bonnet gasket	PTFE	
5	Headpiece	1.4301	A 276 Grade 304
6	Bolts	1.4301/A2	A 194 B8
7	Elongation tube	1.4541	A 213 TP 321
8	Stem	1.4301	A 276 Grade 304
9	Gland packing	Graphite / PTFE / MICA	
10	Gland nut	1.4305	A 276 Grade 303
11	Pillars	1.4404	A 276 Grade 316L
12	Bush	CW452K	B 159 UNS C51900

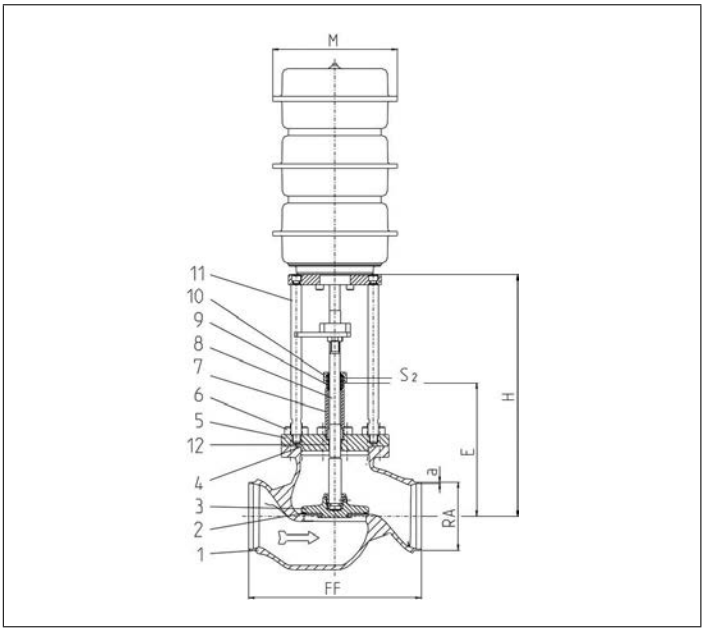

KOREA GAS SAFETY CORPORATION

Type 01343 - Standard design	Technical data	
Nominal size	**DN**	**200**
Face-to-face dimension	FF	560
Height	H	785
Length	E	410
Outside pipe-Ø ISO 1127	RA	219.1
Wall thickness pipe ISO 1127	a	6.3
Outside pipe-Ø ASTM A312	RA	219.1
Wall thickness pipe ASTM A312	a	dimensions acc. to S10 or S40
Socket depth	b	15
Actuator-Ø	M	depent on actuator
Wrench size across flats	S_2	65
Weight w/o actuator	ca. kg	165.0
*Kvs-Value	m^3/h	680.0
*Cv-Value	gal/min	793.0
Stroke	mm	60

Dimensions in mm. * These figures refer to measurements for the flow direction.

Actuated Valves and Actuators

Type 01344 - Actuated Globe Valve

Cryogenic-Globe Valves with Pneumatic Actuator, PN50

Stainless steel body and topwork
Actuator - air opens, spring closes or contrary
" live loaded " gland packing
" cleaned and degreased for oxygen service " - the actuator is not cleaned and degreased for oxygen

Part No. 01344.X.*011
Female thread connection (G) acc. to ISO 228/1

Part No. 01344.X.*016
Female thread connection NPT acc. to ANSI B 1.20.1

Available accessories:
· Solenoid valve
· Limit switch
· Electropneumatic positioner etc.

Available options - on request only:
· Actuator " cleaned and degreased for oxygen sevice "
· Electric actuator · Valve with check disc

Applications:
Approved for air gases, vapours and cryogenic liquefied gases incl. LNG.
Working temperature: -196°C / -321°F (77K) up to +120°C / +248°F (393K)

Materials		DIN EN	ASTM
1	Body	1.4308	A 351 CF8
2	Valve seal	PTFE / Carbon filled (25%)	
3	Disc	1.4301	A 276 Grade 304
4	Bonnet gasket	PTFE	
5	Headpiece	1.4301	A 276 Grade 304
6	Bolts	1.4301/A2	A 194 B8
7	Elongation tube	1.4541	A 213 TP 321
8	Stem	1.4301	A 276 Grade 304
9	Gland packing	Graphite / PTFE / MICA	
10	Gland nut	1.4305	A 276 Grade 303
11	Pillars	1.4404	A 276 Grade 316L
12	Bush	CW452K	B 159 UNS C51900

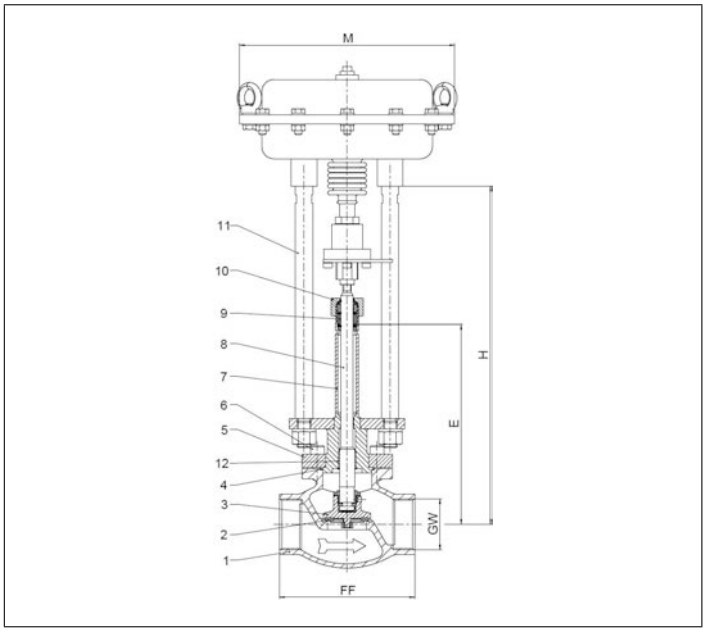

Type 01344 - Standard design	Technical data								
Nominal size	**DN**	**10**	**10**	**15**	**20**	**25**	**32**	**40**	**50**
Thread size	GW	1/4	3/8	1/2	3/4	1	1-1/4	1-1/2	2
Dimension code	.X.	0200	0300	0400	0600	1000	1200	1400	2000
Face-to-face dimension	FF	60	60	85	85	115	115	140	160
Height	H	370	370	370	370	375	405	420	425
Length	E	195	195	195	200	200	230	230	235
Actuator-Ø	M	dependent on actuator							
Wrench size across flats	S_2	30	30	30	30	30	36	36	36
Wrench size across flats	S_3	rund	rund	30	36	41	rund	60	75
Weight w/o actuator	ca. kg	1.6	1.6	2.3	2.7	3.1	4.3	6.2	9.2
*Kvs-Value	m^3/h	1.6	2.2	4.3	6.7	11.5	12.1	22.6	37.1
*Cv-Value	gal/min	1.9	2.6	5.0	7.8	13.4	14.1	26.3	43.2

Dimensions in mm. * These figures refer to measurements for the flow direction.

Edition 2022-11

Actuated Valves and Actuators

Type 03323 - Actuated Globe Valve

Cryogenic-Globe Valves with Pneumatic Actuator, PN16

Stainless steel body and topwork
Actuator - air opens, spring closes or contrary
" live loaded " gland packing
" cleaned and degreased for oxygen service " - the actuator is not cleaned and degreased for oxygen

Part No. 03323.X.*014
Flanged connection acc. to DIN EN 1092-1 PN16

Available accessories:
· Solenoid valve
· Limit switch
· Electropneumatic positioner etc.

Available options - on request only:
· Actuator - " cleaned and degreased for oxygen service "
· Electric actuator
· Valve with check disc
· Valve with control disc (tapered design)

Applications:
Approved for air gases, vapours and cryogenic liquefied gases incl. LNG.
Working temperature: -196°C / -321°F (77K) up to +120°C / +248°F (393K)

Materials		DIN EN	ASTM
1	Body	1.4308	A 351 CF8
2	Valve seal up to DN50	PTFE / Carbon filled (25%)	
2a	Valve seal from DN65	PTFE	
3	Disc	CW614N	B 283 UNS C38500
4	Bonnet gasket	PTFE	
5	Headpiece	1.4301	A 276 Grade 304
6	Bolts	1.4301/A2	A 194 B8
7	Elongation tube	1.4541	A 213 TP 321
8	Stem	1.4301	A 276 Grade 304
9	Gland packing	Graphite / PTFE / MICA	
10	Gland nut	CW614N	B 283 UNS C38500
11	Pillars	1.4404	A 276 Grade 316L
12	Bush	CW452K	B 159 UNS C51900

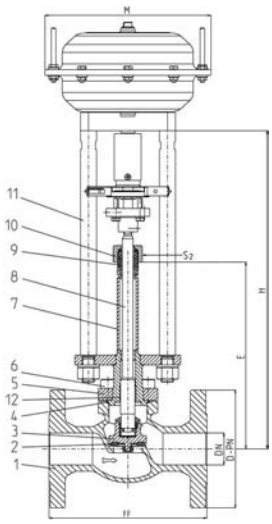

Type 03323 - Standard design	Technical data									
Nominal size	**DN**	**15**	**20**	**25**	**40**	**50**	**65**	**80**	**100**	**150**
Dimension code - Flange EN 1092-1 PN16	.X.	0150	0200	0250	0400	0500	0650	0800	1000	1500
Flange-Ø	D-PN	95	105	115	150	165	185	200	220	285
Face-to-face dimension	FF	140	150	160	200	230	295	310	350	510
Height	H	370	370	375	420	425	510	575	635	685
Length	E	195	200	200	230	235	300	300	300	350
Actuator-Ø	M	dependent on actuator								
Wrench size across flats	S_2	30	30	30	36	36	36	36	41	41
Weight w/o actuator	ca. kg	4.6	6.5	8.5	12.0	16.0	30.0	36.0	53.0	87.0
*Kvs-Value	m^3/h	4.3	6.7	11.5	22.6	37.1	71.1	104.0	170.0	350.0
*Cv-Value	gal/min	5.0	7.8	13.4	26.3	43.2	82.9	121.3	198.3	408.4
Stroke	mm	10	7	9	11	15	23	23	30	40

Dimensions in mm. Compliance of tightness requirements acc. to EN 1626 for DN150 up to 20 bar differential pressure. In the range of >20-40 bar, 350-700ml per second (1 bar, 20°C [68°F]) are reached. * These figures refer to measurements for the flow direction.

Actuated Valves and Actuators

Type 03323 - Actuated Globe Valve

Cryogenic-Globe Valves with Pneumatic Actuator, PN40

Stainless steel body and topwork
Actuator - air opens, spring closes or contrary
" live loaded " gland packing
" cleaned and degreased for oxygen service " - the actuator is not cleaned and degreased for oxygen

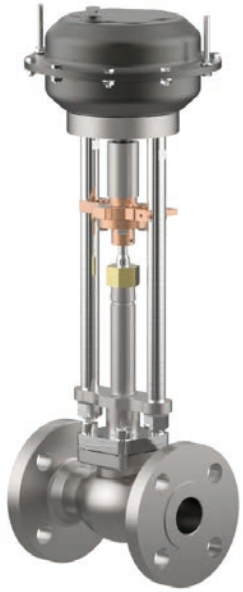

Part No. 03323.X.*012
Flanged connection acc. to DIN EN 1092-1 PN40

Available accessories:
· Solenoid valve
· Limit switch
· Electropneumatic positioner etc.

Available options - on request only:
· Actuator - " cleaned and degreased for oxygen service "
· Electric actuator
· Valve with check disc
· Valve with control disc (tapered design)

Applications:
Approved for air gases, vapours and cryogenic liquefied gases incl. LNG.
Working temperature: -196°C / -321°F (77K) up to +120°C / +248°F (393K)

Materials		DIN EN	ASTM
1	Body	1.4308	A 351 CF8
2	Valve seal up to DN50	PTFE / Carbon filled (25%)	
2a	Valve seal from DN65	PTFE	
3	Disc	CW614N	B 283 UNS C38500
4	Bonnet gasket	PTFE	
5	Headpiece	1.4301	A 276 Grade 304
6	Bolts	1.4301/A2	A 194 B8
7	Elongation tube	1.4541	A 213 TP 321
8	Stem	1.4301	A 276 Grade 304
9	Gland packing	Graphite / PTFE / MICA	
10	Gland nut	CW614N	B 283 UNS C38500
11	Pillars	1.4404	A 276 Grade 316L
12	Bush	CW452K	B 159 UNS C51900

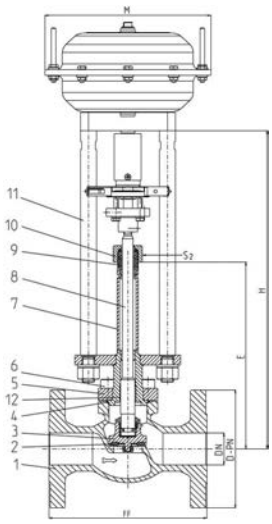

Type 03323 - Standard design	Technical data									
Nominal size	**DN**	**15**	**20**	**25**	**40**	**50**	**65**	**80**	**100**	**150**
Dimension code - Flange EN 1092-1 PN40	.X.	0150	0200	0250	0400	0500	0650	0800	1000	1500
Flange-Ø	D-PN	95	105	115	150	165	185	200	235	300
Face-to-face dimension	FF	140	150	160	200	230	290	310	350	550
Height	H	370	370	375	420	425	510	575	635	685
Length	E	195	200	200	230	235	300	300	300	350
Actuator-Ø	M	dependent on actuator								
Wrench size across flats	S_2	30	30	30	36	36	36	36	41	41
Weight w/o actuator	ca. kg	4.6	6.5	8.5	12.0	16.0	30.0	36.0	53.0	100.0
*Kvs-Value	m^3/h	4.3	6.7	11.5	22.6	37.1	71.1	104.0	170.0	350.0
*Cv-Value	gal/min	5.0	7.8	13.4	26.3	43.2	82.9	121.3	198.3	408.4
Stroke	mm	10	7	9	11	15	23	23	30	40

Dimensions in mm. Compliance of tightness requirements acc. to EN 1626 for DN150 up to 20 bar differential pressure. In the range of >20-40 bar, 350-700ml per second (1 bar, 20°C [68°F]) are reached. * These figures refer to measurements for the flow direction.

Edition 2022-11

Actuated Valves and Actuators

Type 03323 - Actuated Globe Valve

Cryogenic-Globe Valves with Pneumatic Actuator, class 300

Stainless steel body and topwork
Actuator - air opens, spring closes or contrary
" live loaded " gland packing
" cleaned and degreased for oxygen service " - the actuator is not cleaned and degreased for oxygen

Part No. 03323.X.*013
Flanged connection acc. to ANSI B16.5 class 300

Available accessories:
· Solenoid valve
· Limit switch
· Electropneumatic positioner etc.

Available options - on request only:
· Actuator - " cleaned and degreased for oxygen service "
· Electric actuator
· Valve with check disc
· Valve with control disc (tapered design)

Applications:
Approved for air gases, vapours and cryogenic liquefied gases incl. LNG.
Working temperature: -196°C / -321°F (77K) up to +120°C / +248°F (393K)

Materials		DIN EN	ASTM
1	Body	1.4308	A 351 CF8
2	Valve seal up to DN50	PTFE / Carbon filled (25%)	
2a	Valve seal from DN65	PTFE	
3	Disc	CW614N	B 283 UNS C38500
4	Bonnet gasket	PTFE	
5	Headpiece	1.4301	A 276 Grade 304
6	Bolts	1.4301/A2	A 194 B8
7	Elongation tube	1.4541	A 213 TP 321
8	Stem	1.4301	A 276 Grade 304
9	Gland packing	Graphite / PTFE / MICA	
10	Gland nut	CW614N	B 283 UNS C38500
11	Pillars	1.4404	A 276 Grade 316L
12	Bush	CW452K	B 159 UNS C51900

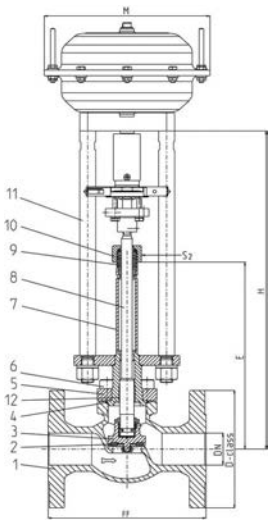

Type 03323 - Standard design	Technical data									
Nominal size	**DN**	**15**	**20**	**25**	**40**	**50**	**65**	**80**	**100**	**150**
Dimension code - Flange ANSI B16.5 class 300	.X.	0400	0600	1000	1400	2000	2400	3000	4000	6000
Flange-Ø	D-class	95	115	125	155	165	190	210	255	320
Face-to-face dimension	FF	140	150	160	200	230	290	310	350	597
Height	H	370	370	375	420	425	510	575	635	685
Length	E	195	200	200	230	235	300	300	300	350
Actuator-Ø	M	dependent on actuator								
Wrench size across flats	S_2	30	30	30	36	36	36	36	41	41
Weight w/o actuator	ca. kg	4.6	6.5	8.5	12.0	16.0	30.0	36.0	53.0	100.0
*Kvs-Value	m^3/h	4.3	6.7	11.5	22.6	37.1	71.1	104.0	170.0	350.0
*Cv-Value	gal/min	5.0	7.8	13.4	26.3	43.2	82.9	121.3	198.3	408.4
Stroke	mm	10	7	9	11	15	23	23	30	40

Dimensions in mm. Compliance of tightness requirements acc. to EN 1626 for DN150 up to 20 bar differential pressure. In the range of >20-40 bar, 350-700ml per second (1 bar, 20°C [68°F]) are reached. * These figures refer to measurements for the flow direction.

Actuated Valves and Actuators

Type 03323 - Actuated Globe Valve

Cryogenic-Globe Valves with Pneumatic Actuator, class 150

Stainless steel body and topwork
Actuator - air opens, spring closes or contrary
" live loaded " gland packing
" cleaned and degreased for oxygen service " - the actuator is not cleaned and degreased for oxygen

Part No. 03323.X.*011
Flanged connection acc. to ANSI B16.5 class 150

Available accessories:
· Solenoid valve
· Limit switch
· Electropneumatic positioner etc.

Available options - on request only:
· Actuator - " cleaned and degreased for oxygen service "
· Electric actuator
· Valve with check disc
· Valve with control disc (tapered design)

Applications:
Approved for air gases, vapours and cryogenic liquefied gases incl. LNG.
Working temperature: -196°C / -321°F (77K) up to +120°C / +248°F (393K)

Materials		DIN EN	ASTM
1	Body	1.4308	A 351 CF8
2	Valve seal up to DN50	PTFE / Carbon filled (25%)	
2a	Valve seal from DN65	PTFE	
3	Disc	CW614N	B 283 UNS C38500
4	Bonnet gasket	PTFE	
5	Headpiece	1.4301	A 276 Grade 304
6	Bolts	1.4301/A2	A 194 B8
7	Elongation tube	1.4541	A 213 TP 321
8	Stem	1.4301	A 276 Grade 304
9	Gland packing	Graphite / PTFE / MICA	
10	Gland nut	CW614N	B 283 UNS C38500
11	Pillars	1.4404	A 276 Grade 316L
12	Bush	CW452K	B 159 UNS C51900

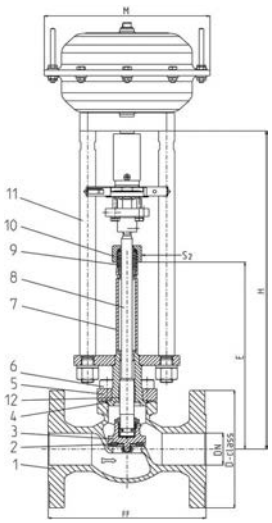

Type 03323 - Standard design	Technical data									
Nominal size	**DN**	**15**	**20**	**25**	**40**	**50**	**65**	**80**	**100**	**150**
Dimension code - Flange ANSI B16.5 class 150	.X.	0400	0600	1000	1400	2000	2400	3000	4000	6000
Flange-Ø	D-class	90	100	110	125	150	180	190	230	280
Face-to-face dimension	FF	140	150	160	200	230	290	310	350	577
Height	H	370	370	375	420	425	510	575	635	685
Length	E	195	200	200	230	235	300	300	300	350
Actuator-Ø	M	dependent on actuator								
Wrench size across flats	S_2	30	30	30	36	36	36	36	41	41
Weight w/o actuator	ca. kg	4.6	6.5	8.5	12.0	16.0	30.0	36.0	53.0	87.0
*Kvs-Value	m^3/h	4.3	6.7	11.5	22.6	37.1	71.1	104.0	170.0	350.0
*Cv-Value	gal/min	5.0	7.8	13.4	26.3	43.2	82.9	121.3	198.3	408.4
Stroke	mm	10	7	9	11	15	23	23	30	40

Dimensions in mm. Compliance of tightness requirements acc. to EN 1626 for DN150 up to 20 bar differential pressure. In the range of >20-40 bar, 350-700ml per second (1 bar, 20°C [68°F]) are reached. * These figures refer to measurements for the flow direction.

Edition 2022-11

Actuated Valves and Actuators

Type 03343 - Actuated Globe Valve

Cryogenic-Globe Valves with Pneumatic Actuator, PN16

Stainless steel body and topwork
Actuator - air opens, spring closes or contrary
" live loaded " gland packing
" cleaned and degreased for oxygen service " - the actuator is not cleaned and degreased for oxygen

Part No. 03343.X.*014
Flanged connection acc. to DIN EN 1092-1 PN16

Available accessories:
· Solenoid valve
· Limit switch
· Electropneumatic positioner etc.

Available options - on request only:
· Actuator - " cleaned and degreased for oxygen service "
· Electric actuator
· Valve with check disc
· Valve with control disc (tapered design)

Applications:
Approved for air gases, vapours and cryogenic liquefied gases incl. LNG.
Working temperature: -196°C / -321°F (77K) up to +120°C / +248°F (393K)

Materials		DIN EN	ASTM
1	Body	1.4308	A 351 CF8
2	Valve seal up to DN50	PTFE / Carbon filled (25%)	
2a	Valve seal from DN65	PTFE	
3	Disc	1.4301	A 276 Grade 304
4	Bonnet gasket	PTFE	
5	Headpiece	1.4301	A 276 Grade 304
6	Bolts	1.4301/A2	A 194 B8
7	Elongation tube	1.4541	A 213 TP 321
8	Stem	1.4301	A 276 Grade 304
9	Gland packing	Graphite / PTFE / MICA	
10	Gland nut	1.4305	A 276 Grade 303
11	Pillars	1.4404	A 276 Grade 316L
12	Bush	CW452K	B 159 UNS C51900

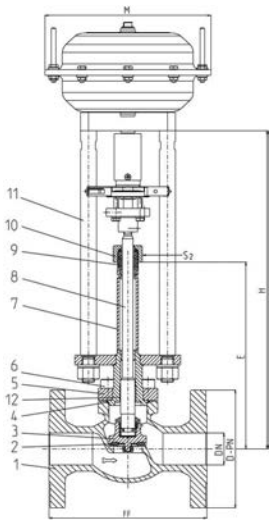

KOREA GAS SAFETY CORPORATION

Type 03343 - Standard design	Technical data									
Nominal size	**DN**	**15**	**20**	**25**	**40**	**50**	**65**	**80**	**100**	**150**
Dimension code - Flange EN 1092-1 PN16	.X.	0150	0200	0250	0400	0500	0650	0800	1000	1500
Flange-Ø	D-PN	95	105	115	150	165	185	200	220	285
Face-to-face dimension	FF	140	150	160	200	230	295	310	350	510
Height	H	370	370	375	420	425	510	575	635	685
Length	E	195	200	200	230	235	300	300	300	350
Actuator-Ø	M	dependent on actuator								
Wrench size across flats	S_2	30	30	30	36	36	36	36	41	41
Weight w/o actuator	ca. kg	4.6	6.5	8.5	12.0	16.0	30.0	36.0	53.0	87.0
*Kvs-Value	m^3/h	4.3	6.7	11.5	22.6	37.1	71.1	104.0	170.0	350.0
*Cv-Value	gal/min	5.0	7.8	13.4	26.3	43.2	82.9	121.3	198.3	408.4
Stroke	mm	10	7	9	11	15	23	23	30	40

Dimensions in mm. Compliance of tightness requirements acc. to EN 1626 for DN150 up to 20 bar differential pressure. In the range of >20-40 bar, 350-700ml per second (1 bar, 20°C [68°F]) are reached. * These figures refer to measurements for the flow direction.

Actuated Valves and Actuators

Type 03343 - Actuated Globe Valve

Cryogenic-Globe Valves with Pneumatic Actuator, PN40

Stainless steel body and topwork
Actuator - air opens, spring closes or contrary
" live loaded " gland packing
" cleaned and degreased for oxygen service " - the actuator is not cleaned and degreased for oxygen

Part No. 03343.X.*012
Flanged connection acc. to DIN EN 1092-1 PN40

Available accessories:
· Solenoid valve
· Limit switch
· Electropneumatic positioner etc.

Available options - on request only:
· Actuator - " cleaned and degreased for oxygen service "
· Electric actuator
· Valve with check disc
· Valve with control disc (tapered design)

Applications:
Approved for air gases, vapours and cryogenic liquefied gases incl. LNG.
Working temperature: -196°C / -321°F (77K) up to +120°C / +248°F (393K)

Materials		DIN EN	ASTM
1	Body	1.4308	A 351 CF8
2	Valve seal up to DN50	PTFE / Carbon filled (25%)	
2a	Valve seal from DN65	PTFE	
3	Disc	1.4301	A 276 Grade 304
4	Bonnet gasket	PTFE	
5	Headpiece	1.4301	A 276 Grade 304
6	Bolts	1.4301/A2	A 194 B8
7	Elongation tube	1.4541	A 213 TP 321
8	Stem	1.4301	A 276 Grade 304
9	Gland packing	Graphite / PTFE / MICA	
10	Gland nut	1.4305	A 276 Grade 303
11	Pillars	1.4404	A 276 Grade 316L
12	Bush	CW452K	B 159 UNS C51900

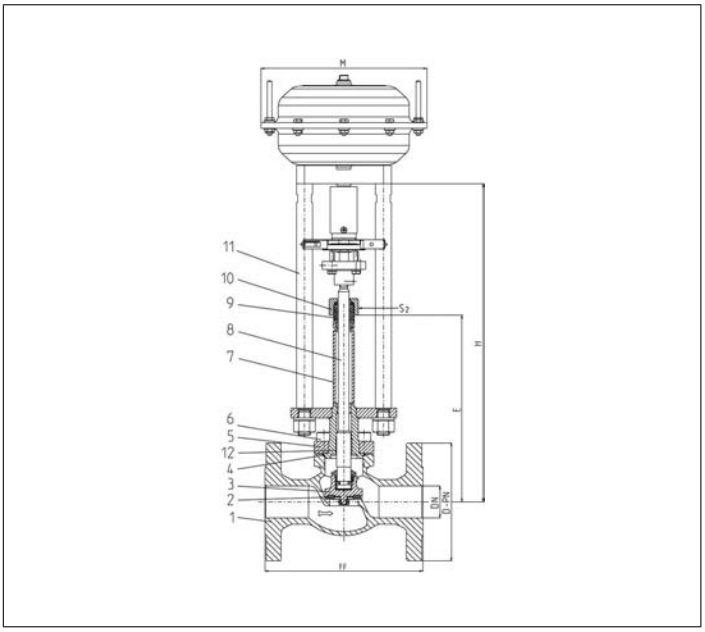

KOREA GAS SAFETY CORPORATION

Type 03343 - Standard design	Technical data									
Nominal size	**DN**	**15**	**20**	**25**	**40**	**50**	**65**	**80**	**100**	**150**
Dimension code - Flange EN 1092-1 PN40	.X.	0150	0200	0250	0400	0500	0650	0800	1000	1500
Flange-Ø	D-PN	95	105	115	150	165	185	200	235	300
Face-to-face dimension	FF	140	150	160	200	230	290	310	350	550
Height	H	370	370	370	420	425	510	575	635	685
Length	E	195	200	200	230	235	300	300	300	300
Actuator-Ø	M	dependent on actuator								
Wrench size across flats	S_2	30	30	30	36	36	36	36	41	41
Weight w/o actuator	ca. kg	4.6	6.5	8.5	12.0	16.0	30.0	36.0	53.0	100.0
*Kvs-Value	m^3/h	4.3	6.7	11.5	22.6	37.1	71.1	104.0	170.0	350.0
*Cv-Value	gal/min	5.0	7.8	13.4	26.3	43.2	82.9	121.3	198.3	408.4
Stroke	mm	10	7	9	11	15	23	23	30	40

Dimensions in mm. Compliance of tightness requirements acc. to EN 1626 for DN150 up to 20 bar differential pressure. In the range of >20-40 bar, 350-700ml per second (1 bar, 20°C [68°F]) are reached. * These figures refer to measurements for the flow direction.

Edition 2022-11

Actuated Valves and Actuators

Type 03343 - Actuated Globe Valve

Cryogenic-Globe Valves with Pneumatic Actuator, class 300

Stainless steel body and topwork
Actuator - air opens, spring closes or contrary
" live loaded " gland packing
" cleaned and degreased for oxygen service " - the actuator is not cleaned and degreased for oxygen

Part No. 03343.X.*013
Flanged connection acc. to ANSI B16.5 class 300

Available accessories:
· Solenoid valve
· Limit switch
· Electropneumatic positioner etc.

Available options - on request only:
· Actuator - " cleaned and degreased for oxygen service "
· Electric actuator
· Valve with check disc
· Valve with control disc (tapered design)

Applications:
Approved for air gases, vapours and cryogenic liquefied gases incl. LNG.
Working temperature: -196°C / -321°F (77K) up to +120°C / +248°F (393K)

Materials		DIN EN	ASTM
1	Body	1.4308	A 351 CF8
2	Valve seal up to DN50	PTFE / Carbon filled (25%)	
2a	Valve seal from DN65	PTFE	
3	Disc	1.4301	A 276 Grade 304
4	Bonnet gasket	PTFE	
5	Headpiece	1.4301	A 276 Grade 304
6	Bolts	1.4301/A2	A 194 B8
7	Elongation tube	1.4541	A 213 TP 321
8	Stem	1.4301	A 276 Grade 304
9	Gland packing	Graphite / PTFE / MICA	
10	Gland nut	1.4305	A 276 Grade 303
11	Pillars	1.4404	A 276 Grade 316L
12	Bush	CW452K	B 159 UNS C51900

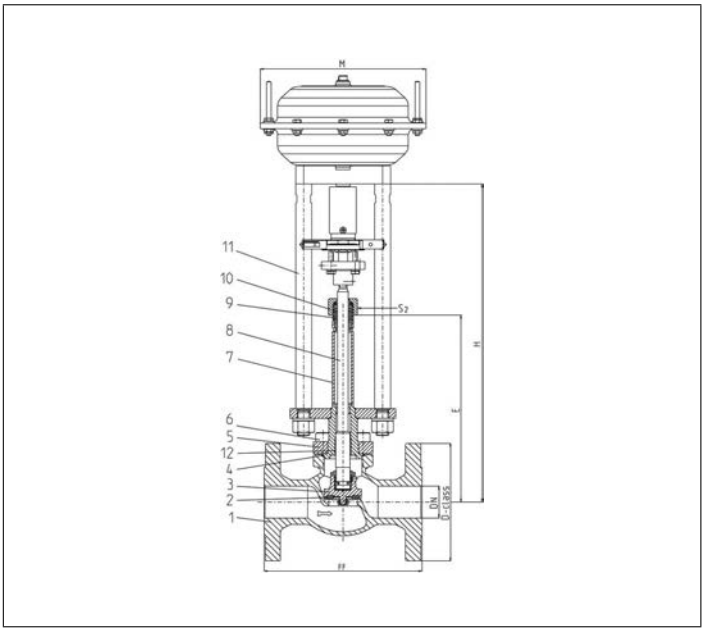

KOREA GAS SAFETY CORPORATION

Type 03343 - Standard design	Technical data									
Nominal size	**DN**	**15**	**20**	**25**	**40**	**50**	**65**	**80**	**100**	**150**
Dimension code - Flange ANSI B16.5 class 300	.X.	0400	0600	1000	1400	2000	2400	3000	4000	6000
Flange-Ø	D-class	95	115	125	155	165	190	210	255	320
Face-to-face dimension	FF	140	150	160	200	230	290	310	350	597
Height	H	370	370	370	420	425	510	575	635	685
Length	E	195	200	200	230	235	300	300	300	300
Actuator-Ø	M	dependent on actuator								
Wrench size across flats	S_2	30	30	30	36	36	36	36	41	41
Weight w/o actuator	ca. kg	4.6	6.5	8.5	12.0	16.0	30.0	36.0	53.0	100.0
*Kvs-Value	m^3/h	4.3	6.7	11.5	22.6	37.1	71.1	104.0	170.0	350.0
*Cv-Value	gal/min	5.0	7.8	13.4	26.3	43.2	82.9	121.3	198.3	408.4
Stroke	mm	10	7	9	11	15	23	23	30	40

Dimensions in mm. Compliance of tightness requirements acc. to EN 1626 for DN150 up to 20 bar differential pressure. In the range of >20-40 bar, 350-700ml per second (1 bar, 20°C [68°F]) are reached. * These figures refer to measurements for the flow direction.

Actuated Valves and Actuators

Type 03343 - Actuated Globe Valve

Cryogenic-Globe Valves with Pneumatic Actuator, class 150

Stainless steel body and topwork
Actuator - air opens, spring closes or contrary
" live loaded " gland packing
" cleaned and degreased for oxygen service " - the actuator is not cleaned and degreased for oxygen

Part No. 03343.X.*011
Flanged connection acc. to ANSI B16.5 class 150

Available accessories:
· Solenoid valve
· Limit switch
· Electropneumatic positioner etc.

Available options - on request only:
· Actuator - " cleaned and degreased for oxygen service "
· Electric actuator
· Valve with check disc
· Valve with control disc (tapered design)

Applications:
Approved for air gases, vapours and cryogenic liquefied gases incl. LNG.
Working temperature: -196°C / -321°F (77K) up to +120°C / +248°F (393K)

Materials		DIN EN	ASTM
1	Body	1.4308	A 351 CF8
2	Valve seal up to DN50	PTFE / Carbon filled (25%)	
2a	Valve seal from DN65	PTFE	
3	Disc	1.4301	A 276 Grade 304
4	Bonnet gasket	PTFE	
5	Headpiece	1.4301	A 276 Grade 304
6	Bolts	1.4301/A2	A 194 B8
7	Elongation tube	1.4541	A 213 TP 321
8	Stem	1.4301	A 276 Grade 304
9	Gland packing	Graphite / PTFE / MICA	
10	Gland nut	1.4305	A 276 Grade 303
11	Pillars	1.4404	A 276 Grade 316L
12	Bush	CW452K	B 159 UNS C51900

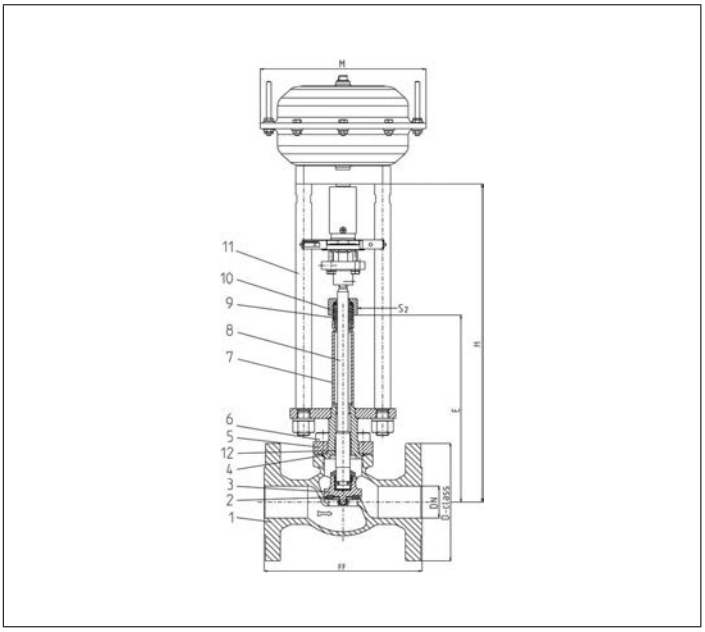

KOREA GAS SAFETY CORPORATION

Type 03343 - Standard design	Technical data									
Nominal size	**DN**	**15**	**20**	**25**	**40**	**50**	**65**	**80**	**100**	**150**
Dimension code - Flange ANSI B16.5 class 150	.X.	0400	0600	1000	1400	2000	2400	3000	4000	6000
Flange-Ø	D-class	90	100	110	125	150	180	190	230	280
Face-to-face dimension	FF	140	150	160	200	230	290	310	350	577
Height	H	370	370	370	420	425	510	575	635	685
Length	E	195	200	200	230	235	300	300	300	300
Actuator-Ø	M	dependent on actuator								
Wrench size across flats	S_2	30	30	30	36	36	36	36	41	41
Weight w/o actuator	ca. kg	4.6	6.5	8.5	12.0	16.0	30.0	36.0	53.0	87.0
*Kvs-Value	m^3/h	4.3	6.7	11.5	22.6	37.1	71.1	104.0	170.0	350.0
*Cv-Value	gal/min	5.0	7.8	13.4	26.3	43.2	82.9	121.3	198.3	408.4
Stroke	mm	10	7	9	11	15	23	23	30	40

Dimensions in mm. Compliance of tightness requirements acc. to EN 1626 for DN150 up to 20 bar differential pressure. In the range of >20-40 bar, 350-700ml per second (1 bar, 20°C [68°F]) are reached. * These figures refer to measurements for the flow direction.

Edition 2022-11

Actuated Valves and Actuators

Type 03343 - Actuated Globe Valve

Cryogenic-Globe Valves with Pneumatic Actuator, class 150

Stainless steel body and topwork
Actuator - air opens, spring closes or contrary
" live loaded " gland packing

Part No. 03343.8000.X
Flanged connection acc. to ANSI B16.5 class 300

In flow direction, the valve with the nominal size DN200 is conform to tightness class L1 up to 18 bar maximum differential pressure acc. to DIN 12567 for LNG use.
This standard can also be used for the tightness class of other cryogenic gases.

Available accessories:
· Solenoid valve
· Limit switch
· Electropneumatic positioner etc.
Available options - on request only:
· Actuator - " cleaned and degreased for oxygen service "
· Electric actuator
· Valve with check or control disc (tapered design)

Applications:
Approved for air gases, vapours and cryogenic liquefied gases incl. LNG.
Working temperature: -196°C / -321°F (77K) up to +120°C / +248°F (393K)

Materials		DIN EN	ASTM
1	Body	1.4308	A 351 CF8
1a	Flange	1.4301	A 276 Grade 304
2	Valve seal	PTFE	
3	Disc	1.4301	A 276 Grade 304
4	Bonnet gasket	PTFE	
5	Headpiece	1.4301	A 276 Grade 304
6	Bolts	1.4301/A2	A 194 B8
7	Elongation tube	1.4541	A 213 TP 321
8	Stem	1.4301	A 276 Grade 304
9	Gland packing	Graphite / PTFE / MICA	
10	Gland nut	1.4305	A 276 Grade 303
11	Pillars	1.4404	A 276 Grade 316L
12	Bush	CW452K	B 159 UNS C51900

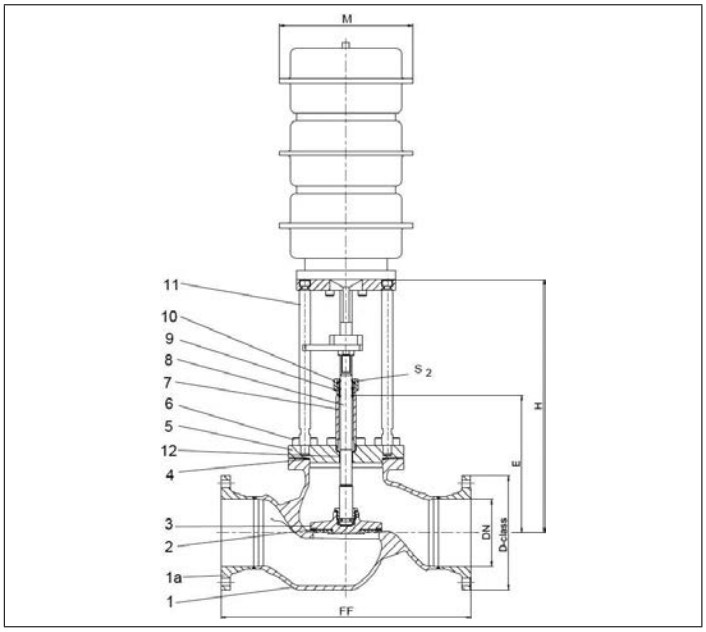

KOREA GAS SAFETY CORPORATION

Type 03343 - Standard design	Technical data	
Nominal size	**DN**	**200**
Dimension code	.X.	8000
Flange-Ø	D-class	345
Face-to-face dimension	FF	760
Height	H	785
Length	E	410
Actuator-Ø	M	dependent on actuator
Wrench size across flats	S_2	30
Weight w/o actuator	ca. kg	135
*Kvs-Value	m^3/h	680
*Cv-Value	gal/min	793
Stroke	mm	60

Dimensions in mm. * These figures refer to measurements for the flow direction.

Actuated Valves and Actuators

Type 01343 - Actuated Control Valve

Cryogenic-Control Valves with Pneumatic Actuator, PN50 (DN65=PN45)

Control characteristic: linear or equal percentage
Stainless steel body and topwork
Actuator - air opens, spring closes or contrary
" live loaded " gland packing
" cleaned and degreased for oxygen service " - the actuator is not cleaned and degreased for oxygen

Part No. 01343.X.*61*
Butt weld connection for stainless steel pipes acc. to ISO 1127 or ASTM A312

Part No. 01343.X.*614
Socket weld connection for stainless steel pipes acc. to ISO 1127 or ASTM A312

Available accessories:
· Solenoid valve · Limit switch
· Electropneumatic positioner etc.

Available options - on request only:
· Welded stainless steel stubs acc. to ISO 1127 or ASTM A312 - length FF + 200mm
· Actuator " cleaned and degreased for oxygen sevice "
· Electric actuator

Applications:
Approved for air gases, vapours and cryogenic liquefied gases incl. LNG.
Working temperature: -196°C / -321°F (77K) up to +120°C / +248°F (393K)

Materials		DIN EN	ASTM
1	Body	1.4308	A 351 CF8
2	Valve seal up to DN50	PTFE / Carbon filled (25%)	
2a	Valve seal from DN65	PTFE	
3	Disc	1.4301	A 276 Grade 304
4	Bonnet gasket	PTFE	
5	Headpiece	1.4301	A 276 Grade 304
6	Bolts	1.4301/A2	A 194 B8
7	Elongation tube	1.4541	A 213 TP 321
8	Stem	1.4301	A 276 Grade 304
9	Gland packing	Graphite / PTFE / MICA	
10	Gland nut	1.4305	A 276 Grade 303
11	Pillars	1.4404	A 276 Grade 316L
12	Bush	CW452K	B 159 UNS C51900

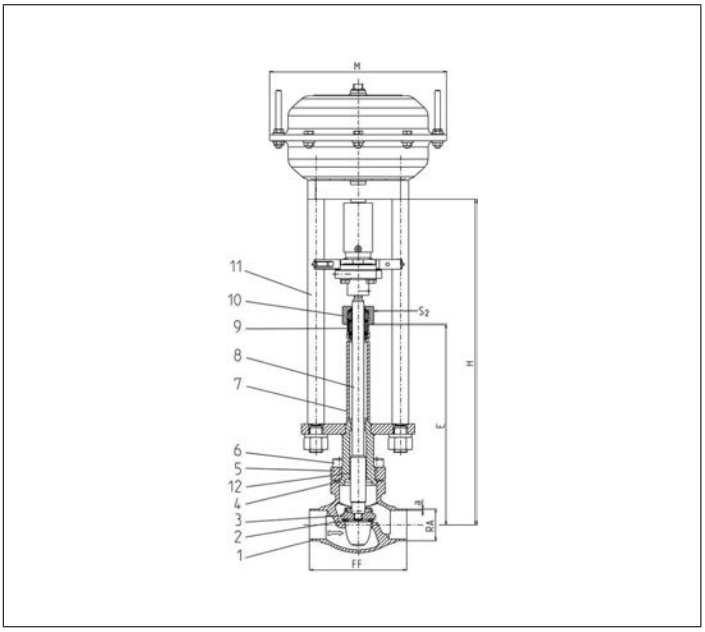

KOREA GAS SAFETY CORPORATION

Type 01343 - Standard design	Technical data									
Nominal size	**DN**	**15**	**20**	**25**	**32**	**40**	**50**	**65**	**80**	**100**
Dimension code	.X.	1521	2026	2533	3238	4048	5060	657x	8088	0114
Face-to-face dimension	FF	85	100	115	115	130	155	205	245	280
Height	H	370	370	375	405	420	425	510	575	635
Length	E	195	200	200	230	230	235	300	300	300
Outside pipe-Ø ISO 1127	RA	21.3	26.9	33.7	38.0	48.3	60.3	76.1	88.9	114.3
Wall thickness pipe ISO 1127	a	2.0	2.0	2.0	2.0	2.0	2.0	2.9	3.2	6.0
Outside pipe-Ø ASTM A312	RA	21.34	26.67	33.4	-	48.26	60.33	73.03	88.90	114.3
Wall thickness pipe ASTM A312	a	dimensions acc. to S10 or S40								
Socket depth	b	10	13	13	-	13	16	16	16	20
Actuator-Ø	M									
Wrench size across flats	S_2	30	30	30	36	36	36	36	36	41
Weight w/o actuator	ca. kg	2.2	2.4	3.1	3.8	6.5	9.0	15.2	20.0	28.0
Stroke	mm	20	20	20	30	40	30	40	40	40

Dimensions in mm.

Edition 2022-11

Type 01343 - Actuated Control Valve

Flow coefficient for Control Valves - Control characteristic linear Kvs-Value in m3/h, Cv-Value in gal/min. These figures refer to measurements for the flow direction.

Type 01343 Control valve																		
Lift in mm	**20**	**20**	**20**	**20**	**20**	**20**	**30**	**30**	**30**	**30**	**30**	**30**	**40**	**40**	**40**	**40**	**40**	**40**
Seat-Ø in mm	**15**	**15**	**20**	**20**	**25**	**25**	**32**	**32**	**36**	**36**	**45**	**45**	**62**	**62**	**76**	**76**	**94**	**94**
Nominal size	Kvs	Cv	Kvs	Cv	Kvs	Cv	Kvs	Cv	Kvs	Cv	Kvs	Cv	Kvs	Cv	Kvs	Cv	Kvs	Cv
DN 15	3.5	4.0																
DN 20			6.3	7.3														
DN 25					10.0	11.6												
DN 32							16.0	18.5										
DN 40									19.0	22.0								
DN 50											30.0	34.7						
DN 65													60.0	70.0				
DN 80															86.0	100.3		
DN 100																	140.0	163.3

Ideal inherent linear characteristic line acc. to DIN IEC 60534 Part 2-4

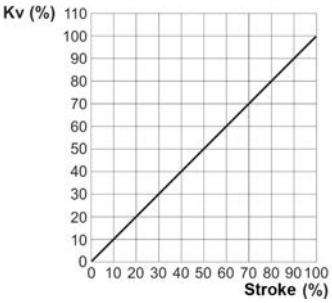

Sample drawing cone, control charactristic linear

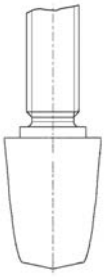

Flow coefficient for Control Valves - Control characteristic equal percentage Kvs-Value in m^3/h, Cv-Value in gal/min. These figures refer to measurements for the flow direction.

Type 01343 Control valve																		
Lift in mm	**20**	**20**	**20**	**20**	**20**	**20**	**30**	**30**	**30**	**30**	**30**	**30**	**40**	**40**	**40**	**40**	**40**	**40**
Seat-Ø in mm	**15**	**15**	**20**	**20**	**25**	**25**	**32**	**32**	**36**	**36**	**45**	**45**	**62**	**62**	**76**	**76**	**94**	**94**
Nominal size	Kvs	Cv	Kvs	Cv	Kvs	Cv	Kvs	Cv	Kvs	Cv	Kvs	Cv	Kvs	Cv	Kvs	Cv	Kvs	Cv
DN 15	3.5	4.0																
DN 20			4.0	4.6														
DN 20			6.0	6.9														
DN 25					2.5	2.9												
DN 25					4.5	5.2												
DN 25					6.3	7.3												
DN 25					10.0	11.6												
DN 32							10.0	11.6										
DN 32							14.0	16.2										
DN 40									10.0	11.6								
DN 40									19.0	22.0								
DN 50											10.0	11.6						
DN 50											16.0	18.5						
DN 50											25.0	28.9						
DN 50											30.0	34.7						
DN 65													60.0	70.0				
DN 80															80.0	93.3		
DN 100																	130.0	151.7

Ideal inherent equal percentage characteristic curve acc. to DIN IEC 60534 Part 2-4

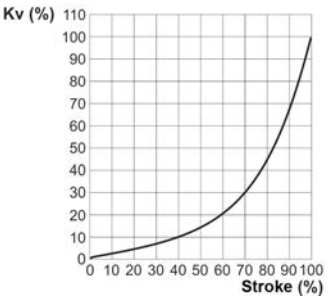

Sample drawing cone, control charactristic equal percentage

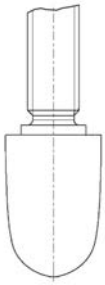

Actuated Valves and Actuators

Type 01423 - Actuated Globe Valve

Top Entry Cryogenic-Globe Valves with Pneumatic Actuator, PN50 (DN100=PN40)

Stainless steel body and topwork
" live loaded " gland packing
" cleaned and degreased for oxygen service " - the actuator is not cleaned and degreased for oxygen

Part No. 01423.X.3081
Butt weld connection for stainless steel pipes acc. to ISO 1127 or ASTM A312

Available accessories/options - on request only:
· Solenoid valve · Limit switch · Electropneumatic positioner etc.
· Extension H and A acc. to customer specification
· Actuator " cleaned and degreased for oxygen service "
· Valve with check disc, valve with control disc (tapered design)

Applications:
Approved for air gases, vapours and cryogenic liquefied gases incl. LNG.
Working temperature: -196°C / -321°F (77K) up to +120°C / +248°F (393K)

Materials		DIN EN	ASTM
1	Body	1.4308	A 351 CF8
2	Valve seal	PTFE / Carbon filled (25%)	
3	Disc	1.4301	A 276 Grade 304
4	Guide bush	CW453K	B 103 UNS C52100
5	Stem	1.4301	A 276 Grade 304
6	Elongation tube	1.4541	A 213 TP 321
7	Elongation tube	1.4541	A 213 TP 321
8	Cold box feature	1.4301	A 276 Grade 304
9	Headpiece flange	1.4301	A 276 Grade 304
10	Headpiece	1.4301	A 276 Grade 304
11	Bolts	1.4301/A2	A 193 B8
12	Gland packing	Graphite / PTFE / MICA	
13	Gland nut	1.4404	A276 Grade 316L
14	Pillars	1.4404	A276 Grade 316L

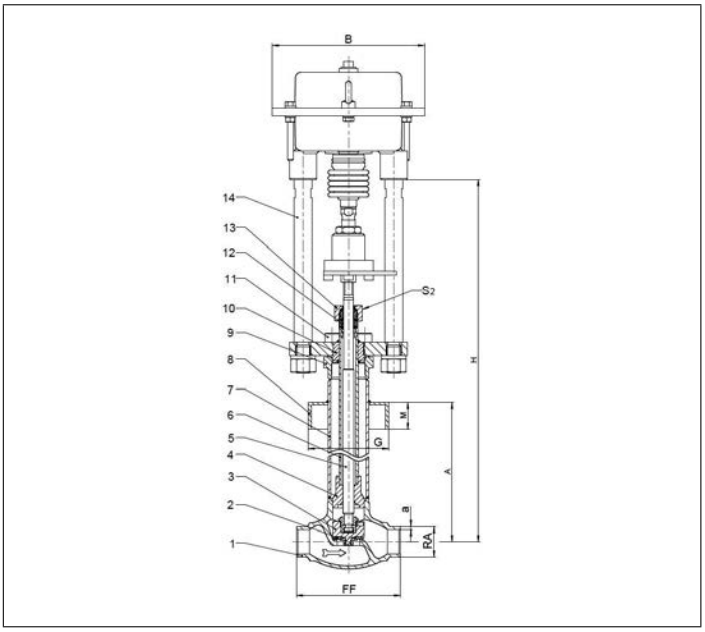

Type 01423 - Standard design	Technical data									
Nominal size	**DN**	**10**	**15**	**20**	**25**	**40**	**50**	**65**	**80**	**100**
Dimension code	.X.	1013	1521	2026	2533	4048	5060	6573	8088	0114
Face-to-face dimension	FF	70	85	100	115	130	155	205	245	280
Height	H	770	785	790	790	820	910	1105	1110	1290
Actuator-Ø	B	dependent on actuator								
Outside pipe-Ø ASTM A312	RA	13.50	21.34	26.67	33.40	48.26	60.33	73.00	89.00	114.30
Wall thickness pipe ASTM A312	a	dimensions acc. to S10 or S40								
Length	A	540	540	540	540	540	610	610	640	750
Length	G	acc. to customer specification								
Length	M	acc. to customer specification								
Wrench size across flats	S_2	27	27	27	27	32	32	41	41	41
Stroke	mm	10	10	7	9	11	15	23	23	30
Weight without actuator	ca. kg	5.7	5.5	6.0	7.0	10.0	11.5	28.3	34.3	49.2
*Kvs-Value	m^3/h	1.6	4.3	6.7	11.5	20.6	37.1	71.1	104.0	168.0
*Cv-Value	gal/min	1.9	5.0	7.8	13.4	23.9	43.2	82.9	121.3	196.0

Dimensions in mm. * These figures refer to measurements for the flow direction.

Edition 2022-11

Actuated Valves and Actuators

Type 11C01 - Globe Valve FullX with actuator

Top-Entry Cryogenic-Globe Valves with Pneumatic Actuator, up to PN63

Stainless steel body and topwork,
actuator - **spring to close**, air to open
" live loaded " gland packing
" cleaned and degreased for oxygen service " - the actuator is not cleaned and degeased for oxygen

Butt weld connection for stainless steel pipes acc. to ISO 1127

Available accessories:
· Solenoid valve · Limit switch · Electropneumatic positioner etc.

Available options:
· Actuator "cleaned and degreased for oxygen service"
· Bellow, top position (with or without monitoring)
· Bellow, bottom position (with or without monitoring)
· Check function
· Control function
· Throttle function

On request only:
· Further connection types

Applications:
Approved for hydrogen, air gases, vapours and cryogenic liquefied gases.
Working temperature: -269°C / -452 °F (4K) up to +80°C / +176 °F (353K)

Materials		DIN EN	ASTM
1	Body	1.4571	A 313 Grade 316TI
2	Valve seal	PCTFE	
3	Disc	1.4571	A 313 Grade 316TI
4	Guide	PTFE / Carbon filled (25%)	
5	Tube	1.4571	A 313 Grade 316TI
6	Hollow stem	1.4571	A 313 Grade 316TI
7	Collar	1.4404	A 276 Grade 316L
8	Flange	1.4404	A 276 Grade 316L
9	Bonnet gasket	PTFE	
10	Bushing	CW452K	B 159 UNS C51900
11	Bolt	A4-70	A 194 B8M
12	Head piece	1.4404	A 276 Grade 316L
13	Sliding bushing	CW452K	B 159 UNS C51900
14	Gasket	PTFE / Carbon filled (25%)	
15	Gland bold	1.4404	A 276 Grade 316L
16	Wiper	PEEK	
17	Stem	1.4404	A 276 Grade 316L
18	O-ring	FPM (VITON)	
19	Pillars	1.4404	A 276 Grade 316L

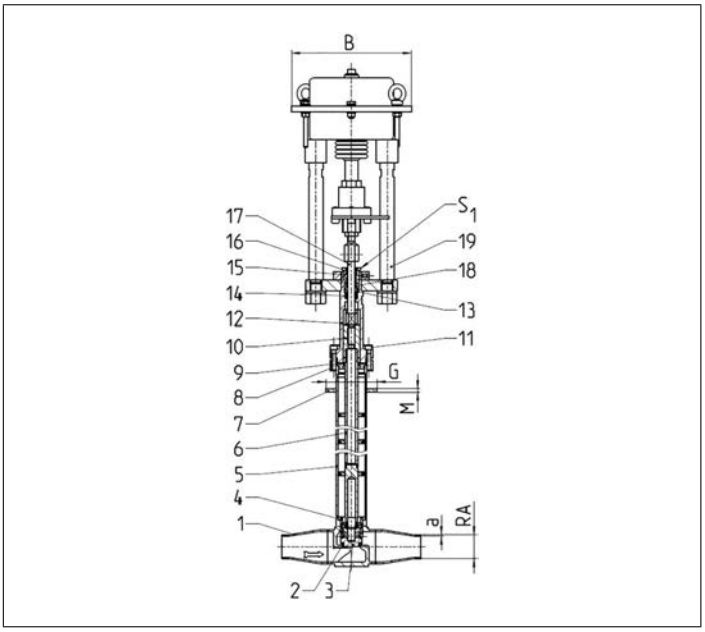

CE

Technical Data - Standard design									
Nominal size [DN]	Body*	Collar-Ø (G) [mm]	Length (M) [mm]	Actuator-Ø (B) [mm]	Wrench size across flats (S_1) [mm]	Outside pipe-Ø ISO (RA) [mm]	Wall thickness pipe ISO (a) [mm]	Stroke with bellow [mm]	Stroke without bellow [mm]
10	S/A/Y	60/71.5	5		24	17.2	1.8	10	15
15	S/A/Y	60/71.5	5		24	21.3	2.0	10	15
20	S/A/Y	60/71.5	5		24	26.9	2.3	10	15
25	S/A/Y	60/71.5	5	dependent	24	33.7	2.6	10	15
32	S	60/71.5	5	on	30	42.4	2.6	20	20
32	A/Y	60/71.5	5	actuator	30	42.4	2.6	20	40
40	S	60/71.5	5		30	48.3	2.6	20	20
40	A/Y	60/71.5	5		30	48.3	2.6	20	40
50	S	60/71.5	5		30	60.3	2.9	20	20
50	A/Y	60/71.5	5		30	60.3	2.9	20	40

* S = Straight body, A = Angle type, Y = Y type

Type 11C01 - Globe Valve FullX with actuator

HEROSE

Body types

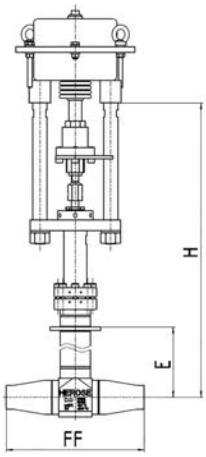

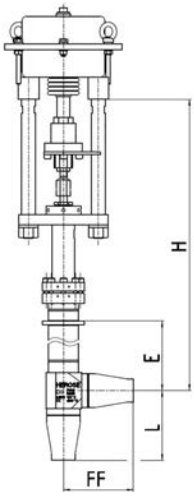

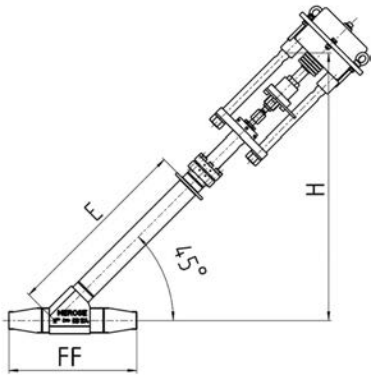

Straight body

DN	Facs-toface dim. (FF) [mm]	Height (H) [mm]	Length (E) [mm]	Kvs-value [m³/h]	Kvs-value *w.b.[m³/h]	Cv-value [gal/min]	Cv-value *w.b.[gal/min]	Weight** [ca.kg]
10	150	647	330	3.4	3.4	4.0	4.0	4.45
15	150	647	330	4.4	4.4	5.1	5.1	4.47
20	195	647	330	9.8	9.5	11.4	11.0	5.07
25	195	647	330	12.3	12.0	14.3	14.0	5.11
32	235	dependent	440	25.8	25.8	30.0	30.0	9.53
40	235	on	440	28.3	28.8	32.9	32.9	9.56
50	280	actuator	520	44.0	44.0	51.2	40.7	12.62

* w.b. = with bellow, ** without actuator

Body angle type

DN	Face-to-face dim. (FF) [mm]	Height (H) [mm]	Length (E) [mm]	Length (L) [mm]	Kvs-value [m³/h]	Kvs-value *w.b.[m³/h]	Cv-value [gal/min]	Cv-value *w.b.[gal/min]	Weight** [ca.kg]
10	80	647	330	80	4.7	4.7	5.5	5.5	4.43
15	80	647	330	80	5.7	5.7	6.6	6.6	4.45
20	100	647	330	100	19.8	16.5	23.0	19.2	5.02
25	100	647	330	100	22.3	19.0	25.9	22.1	5.07
32	120	dependent	440	120	41.1	33.3	47.8	38.7	9.31
40	120	on	440	120	43.6	35.8	50.7	41.6	9.34
50	140	actuator	520	140	80.0	63.0	93.0	73.3	14.23

* w.b. = with bellow, ** without actuator

Body Y type

DN	Face-to-face dim. (FF) [mm]	Height (H) [mm]	Length (E) [mm]	Kvs-value [m³/h]	Kvs-value *w.b.[m³/h]	Cv-value [gal/min]	Cv-value *w.b.[gal/min]	Weight** [ca.kg]
10	185	521	370	4.2	4.2	4.9	4.9	4.76
15	185	521	370	5.2	5.2	6.0	6.0	4.77
20	250	524	375	11.9	7.7	13.8	9.0	5.76
25	250	524	375	14.4	10.2	16.7	11.9	5.79
32	285	dependent	500	34.4	28.6	40.0	33.3	10.73
40	285	on	500	36.9	31.1	42.9	36.2	10.76
50	340	actuator	595	69.8	35.0	81.2	73.3	17.20

* w.b. = with bellow, ** without actuator

Type 11C01 - Globe Valve FullX with actuator

Flow coefficient for Control Valves - Control characteristic equal percentage Kvs-Value in m^3/h, Cv-Value in gal/min. These figures refer to measurements for the flow direction.

Type 11C01 Globe Valve FullX with actuator and control function

DN	Kvs [m^3/h]	Cv [gal/min]	Stroke [mm]
10	1.0	1.2	10
15	3.5	4.1	10
20	4.0	4.7	10
25	6.3	7.3	10
32	10.0	11.6	20
40	19.0	22.1	20
50	30.0	34.9	20

Ideal inherent equal percentage characteristic curve acc. to DIN IEC 60534 Part 2-4

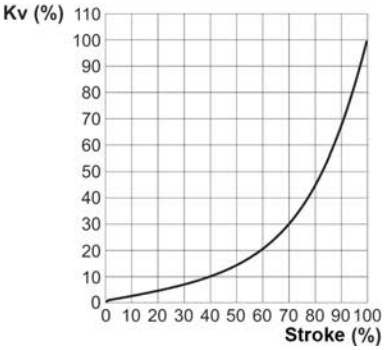

Sample drawing cone,
control charactristic equal percentage

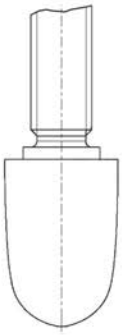

Type 11C01 - Globe Valve FullX with actuator

Configurable options
For configurable types, the HEROSE part number consists as follows:

Type	Series	Dimension code	Option codes
11C01.	A001.	0250.	ESR-MYJ-CBQ-QXY-KCZ-JRB-LYV-SNP-HTW-GCX
1	2	3	4 up to 13

	Selection of the type					Type
		Product group	Market segment	Valve design	Product approval	
1	Type	Globe Valve FullX	Cryogenic	Top Entry	PED	11C01

	Selection of the series				Series
2	Series	increased external tightness	medium pressure rating	additional approval not selected	A001

	Selection of the nominal size		Dimension code
3	Nominal sizes	DN10	0100
		DN15	0150
		DN20	0200
		DN25	0250
		DN32	0320
		DN40	0400
		DN50	0500

	Selection of options		Option codes
4	Pressure rating	PN63	ESR

5	Approvals	PED DIN EN 1626	MYJ

6	Body types	Body angle type	CBQ
		Straight body	HJC
		Body Y type	PYU

Type 11C01 - Globe Valve FullX with actuator

HEROSE

		Nominal size	Body type	Connection type value inlet/outlet	Outside pipe-∅ ISO (RA) [mm]	Wall thickness pipe ISO (a) [mm]	Connection extension inlet/outlet	
7	Connections	DN10	Body angle type	Butt weld	17.2	1.8	not selected	QXY
		DN10	Straight body	Butt weld	17.2	1.8	not selected	KSP
		DN10	Body Y type	Butt weld	17.2	1.8	not selected	PKL
		DN15	Body angle type	Butt weld	21.3	2.0	not selected	CVP
		DN15	Straight body	Butt weld	21.3	2.0	not selected	MZE
		DN15	Body Y type	Butt weld	21.3	2.0	not selected	FYB
		DN20	Body angle type	Butt weld	26.9	2.3	not selected	BNN
		DN20	Straight body	Butt weld	26.9	2.3	not selected	DPN
		DN20	Body Y type	Butt weld	26.9	2.3	not selected	WHZ
		DN25	Body angle type	Butt weld	33.7	2.6	not selected	XZE
		DN25	Straight body	Butt weld	33.7	2.6	not selected	PKY
		DN25	Body Y type	Butt weld	33.7	2.6	not selected	CXP
		DN32	Body angle type	Butt weld	42.4	2.6	not selected	ZKC
		DN32	Straight body	Butt weld	42.4	2.6	not selected	GLU
		DN32	Body Y type	Butt weld	42.4	2.6	not selected	HHY
		DN40	Straight body	Butt weld	48.3	2.6	not selected	WUW
		DN40	Body angle type	Butt weld	48.3	2.6	not selected	RJE
		DN40	Body Y type	Butt weld	48.3	2.6	not selected	JBM
		DN50	Body angle type	Butt weld	60.3	2.9	not selected	BGA
		DN50	Straight body	Butt weld	60.3	2.9	not selected	WPW
		DN50	Body Y type	Butt weld	60.3	2.9	not selected	UXB

8	Disc function	lockable function	KCZ
		lockable check function	JDA
		lockable control function	SWX
		lockable throttle function	WVV

9	Operation	manual	YFW
		actuated	RQZ

10	Handwheel options	Material 1.4409	silver (natural)	JRB

		Bellow	Bellow position	Bellow monitoring	Dimension bellow monitoring	
11	Bellow options	not selected	not selected	not selected	not selected	LYV
		selected	top	not selected	not selected	MUR
		selected	bottom	not selected	not selected	FYX
		selected	top	selected	DIN EN ISO 8434-1-WDS-S6	GXD
		selected	bottom	selected	DIN EN ISO 8434-1-WDS-S6	XHA

		Nominal size	Body type	Collar diameter dimension (G) [mm]	Collar form	Collar height (M) [mm]	Collar position (E) [mm]	Collar thickness (C) [mm]	
12	Collar options	DN10/15	Body angle type/ Straight body	60.0	Washer, circular, unperforated	5.0	330.0	5.0	SNP
		DN10/15	Body Y type	60.0	Washer, circular, unperforated	5.0	370.0	5.0	GEM
		DN10/15	Body angle type/ Straight body	71.5	Washer, circular, unperforated	5.0	330.0	5.0	BBK
		DN10/15	Body Y type	71.5	Washer, circular, unperforated	5.0	370.0	5.0	DGJ
		DN20/25	Body angle type/ Straight body	71.5	Washer, circular, unperforated	5.0	330.0	5.0	BBK
		DN20/25	Body Y type	71.5	Washer, circular, unperforated	5.0	375.0	5.0	EMK
		DN20/25	Body angle type/ Straight body	60.0	Washer, circular, unperforated	5.0	330.0	5.0	SNP
		DN20/25	Body Y type	60.0	Washer, circular, unperforated	5.0	375.0	5.0	WLU
		DN32/40	Body angle type/ Straight body	84.0	Washer, circular, unperforated	5.0	440.0	5.0	WBE
		DN32/40	Body Y type	84.0	Washer, circular, unperforated	5.0	500.0	5.0	QWB
		DN50	Body angle type/ Straight body	109.0	Washer, circular, unperforated	5.0	520.0	5.0	JUP
		DN50	Body Y type	109.0	Washer, circular, unperforated	5.0	595.0	5.0	GSH

13	Material selection	Body material 1.4571	Sealing material made out of PCTFE	HTW

Actuated Valves and Actuators

Type 27100 - Electric Actuator

Electric Actuators for Globe and Control Valves

mechanical position indicator, with emergency handwheel, protection class IP 65 (DIN VDE 0470)
power supply 24 V, 115 V, 230 V, 50/60 Hz, **(please indicate on purchase order)**
Mounting position: considering the mounting position of the valve
For outdoor installation or high humidity, we recommend the use of two heatings

Part No. 27100.0030.*02800
2x force switch - directly wired, 2x limit switch - directly wired
Part No. 27100.0060.*04500
2x force switch - directly wired, 2x limit switch - directly wired
Part No. 27100.0100.*09000
2x force switch - directly wired, 2x limit switch - directly wired

*AC=alternating current, *DC=direct current
Ambient temperature limit: -20°C / -4°F (253K) up to +70°C / +158°F (343K)

Available options - on request only:
· Potentiometer
· Digital positioner
· BLDC controller
· Electrical position transmitter
· Heating (-35°C / -31°F / 238K)
· Offshore / Onshore
· Failsafe option

DN	Differential pressure in bar									
	1.00 - 5.00	5.01 - 7.00	7.01 - 10.00	10.01 - 13.00	13.01 - 20.00	20.01 - 25.00	25.01 - 33.00	33.01 - 40.00	40.01 - 46.01	46.01 - 50.00
10	A	A	A	A	A	A	A	A	A	A
15	A	A	A	A	A	A	A	A	A	A
20	A	A	A	A	A	A	A	A	A	A
25	A	A	A	A	A	A	A	A	B	B
32	A	A	A	A	A	A	B	B	B	B
40	A	A	A	A	A	B	B	B	C	C
50	A	A	A	A	B	B	C	C	C	-
65	A	A	A	B	C	C	-	-	-	-
80	B	B	B	C	-	-	-	-	-	-
100	B	B	C	-	-	-	-	-	-	-

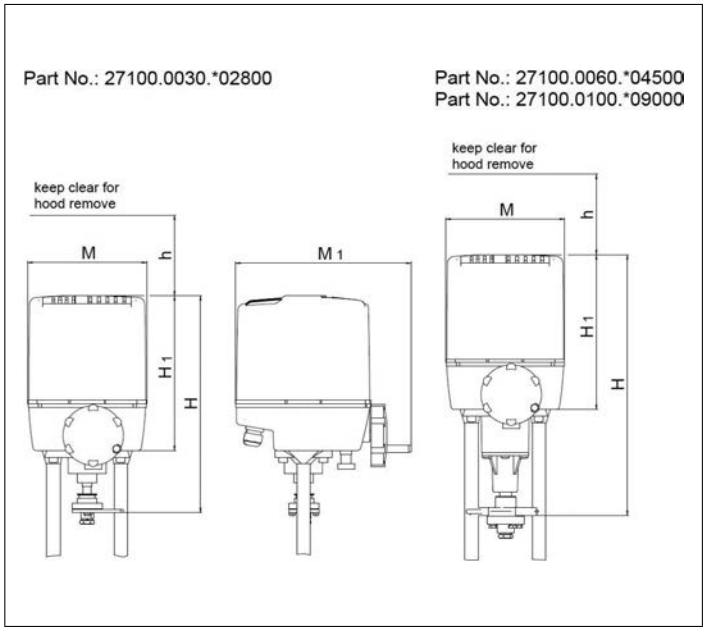

Code in Table	Part No. Actuator
A	27100.0030.*02800
B	27100.0060.*04500
C	27100.0100.*09000

Type 27100	Technical Data			
Part No. Actuator:				
		.0030.*02800	**.0060.*04500**	**.0100.*09000**
Diameter	M	177	177	177
Diameter	M1	262	262	262
Operational force	kN	2.8	6.0	10.0
Operational speed	mm/s	0.28	0.45	0.90
Power consumption	VA	12 (10VADC)	46 (18VADC)	81 (41VADC)
Cable glands		4x M20	4x M20	4x M20
Height	H	327	393	393
Height	H1	233	233	233
Height	h	120	120	120
Weight	ca. kg	4.5	6.7	6.7
Stroke	mm	40	40	40

Dimensions in mm.

Actuated Valves and Actuators

Type 27511 - Pneumatic Actuator - Globe Valve (on/off)

Pneumatic Actuators for Globe Valves (on/off)
Actuator - air to open, **spring to close**
maximum air pressure for operation 6.0 bar g
Actuator coating outside - Epoxy resin
Available options - on request only:
· Pneumatic actuator with override handwheel
Ambient temperature limit: -20°C / -4°F (253K) up to +80°C / 176°F (353K)

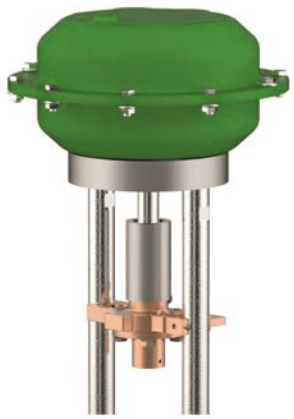

Overview - required actuator sizes for differential pressures

DN	Differential pressure in bar												
	1.0 - 3.0	3.1 - 4.0	4.1 - 7.0	7.1 - 10.0	10.1 - 11.0	11.1 - 15.0	15.1 - 18.0	18.1 - 20.0	20.1 - 22.0	22.1 - 30.0	30.1 - 33.0	33.1 - 35.0	35.1 - 50.0
10	A	A	A	A	A	A	A	A	A	A	A	A	A
15	A	A	A	A	A	A	A	A	A	A	A	A	A
20	A	A	A	A	A	A	A	A	A	A	B	B	B
25	A	A	A	A	A	A	A	A	B	B	B	B	B
32	A	A	A	A	A	B	B	B	B	B	B	B	C
40	B	B	B	B	B	B	B	B	B	C	C	C	C
50	B	B	B	B	B	B	C	C	C	C	C	C	D
65	B	B	B	C	C	C	C	D	E	E	E	F	F
80	B	B	C	C	D	E	E	E	E	F	F	F	G
100	B	C	D	E	E	F	F	F	F	G	o.r. - on request		
150	D	E	F	G	o.r. - on request								

The differential pressures are based on the flow direction of the valve.
Differential pressures against the flow direction have to be requested separately.

Code in Table	Part No. Actuator
A	27511.15A6.3SPO
B	27511.35B6.6GPO
C	27511.60A6.6GPO
D	27511.60C6.7GPO
E	27511.75B6.3DPO
F	27511.75B6.5DPO
G	27511.75B6.7DPO

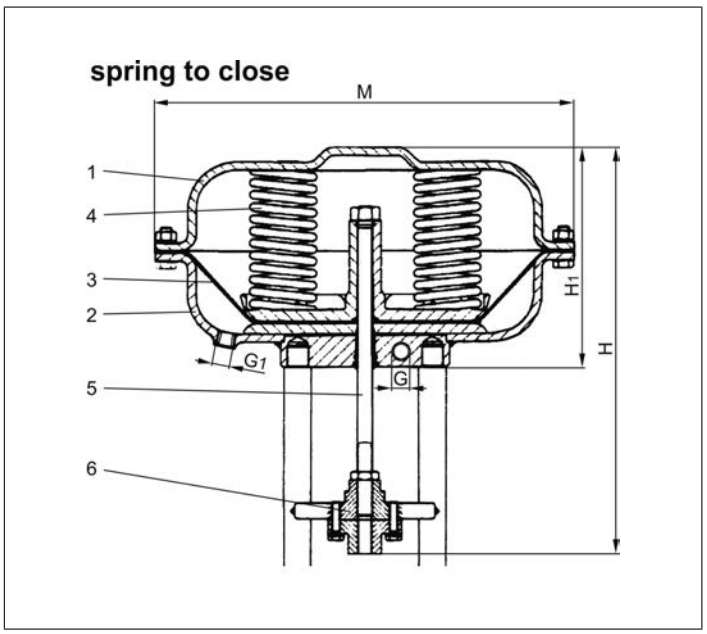

Materials		DIN EN	ASTM
1	Body	1.0333	A 619 Grade 1008
2	Body	1.0333	A 619 Grade 1008
3	Diaphragm	NBR	
4	Springs	1.1200	A 576 Grade 1045
5	Actuator stem	1.4301	A 276 Grade 304
6	Coupling	CC333G	B 148 UNS C95800

Type 27511	Technical data							
Part No. Actuator		27511						
		.15A6.3SPO	**.35B6.6GPO**	**.60A6.6GPO**	**.60C6.7GPO**	**.75B6.3DPO**	**.75B6.5DPO**	**.75B6.7DPO**
Diameter Actuator	M	162	210	310	310	430	430	430
Height	H	256	276	309	352	353	353	353
Height	H1	116	136	166	186	234	234	234
Thread	G	G1/8" with Ermeto-Fitting L8	-	-	-	-	-	-
Thread	G1	-	1/4" NPT	1/4" NPT	1/4" NPT	1/4" NPT	1/4" NPT	1/4" NPT
Diaphragm area	cm^2	120	280	530	530	1000	1000	1000
Spring range	bar	0.9 - 2.0	0.8 - 3.0	0.8 - 2.8	0.7 - 3.0	0.7 - 2.1	1.2 - 3.4	1.6 - 4.7
Minimum air pressure	bar	2.2	3.2	3.0	3.2	2.3	3.6	4.9
Regulating lift	mm	20	35	40	60	60	60	60
Weight	ca. kg	3.0	5.0	12.5	14.0	37.0	39.0	41.0

Dimensions in mm.

Edition 2022-11

Actuated Valves and Actuators

Type 27511 - Pneumatic Actuator - Control Valve

Pneumatic Actuators for Control Valves
Actuator - air to open, **spring to close**
maximum air pressure for operation 6.0 bar g
Actuator coating outside - Epoxy resin
Available options - on request only:
· Pneumatic actuator with override handwheel
Ambient temperature limit: -20°C / -4°F (253K) up to +80°C / 176°F (353K)

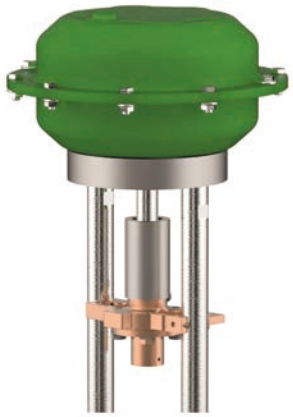

Overview - required actuator sizes for differential pressures

DN	Differential pressure in bar															
	1.0 - 2.0	2.1 - 4.0	4.1 - 6.0	6.1 - 8.0	8.1 - 10.0	10.1 - 12.0	12.1 - 15.0	15.1 - 17.0	17.1 - 19.0	19.1 - 22.0	22.1 - 25.0	25.1 - 29.0	29.1 - 35.0	35.1 - 39.0	39.1 - 42.0	42.1 - 50.0
10	A	A	A	A	A	A	A	A	A	A	A	A	A	A	A	A
15	A	A	A	A	A	A	A	A	A	A	A	A	A	A	A	A
20	A	A	A	A	A	A	A	A	A	A	A	B	B	B	B	B
25	A	A	A	A	A	A	A	A	B	B	B	B	B	B	B	C
32	B	B	B	B	B	B	B	B	B	B	C	C	C	C	C	C
40	B	B	B	B	B	B	B	C	C	C	C	C	C	C	D	D
50	B	B	B	B	B	C	C	C	C	C	C	D	D	E	E	E
65	C	C	C	C	C	C	D	E	E	E	E	E	F	F	F	G
80	C	C	C	D	E	E	E	E	F	F	F	F	G	G	o.r.	
100	C	C	D	E	E	F	F	F	F	G	G	o.r. - on request				
150	D	E	F	F	G	o.r. - on request										

The differential pressures are based on the flow direction of the valve.
Differential pressures against the flow direction have to be requested separately.

Code in Table	Part No. Actuator
A	27511.15A6.3SPO
B	27511.35B6.6GPO
C	27511.60A6.6GPO
D	27511.60C6.7GPO
E	27511.75B6.3DPO
F	27511.75B6.5DPO
G	27511.75B6.7DPO

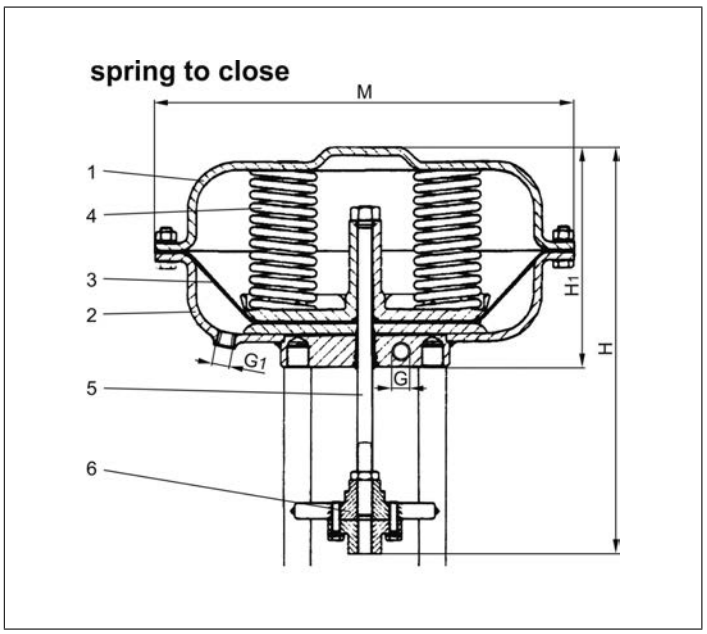

Materials		DIN EN	ASTM
1	Body	1.0333	A 619 Grade 1008
2	Body	1.0333	A 619 Grade 1008
3	Diaphragm	NBR	
4	Springs	1.1200	A 576 Grade 1045
5	Actuator stem	1.4301	A 276 Grade 304
6	Coupling	CC333G	B 148 UNS C95800

Type 27511	Technical data							
Part No. Actuator		27511						
		.15A6.3SPO	**.35B6.6GPO**	**.60A6.6GPO**	**.60C6.7GPO**	**.75B6.3DPO**	**.75B6.5DPO**	**.75B6.7DPO**
Diameter Actuator	M	162	210	310	310	430	430	430
Height	H	256	276	309	352	353	353	353
Height	H1	116	136	166	186	234	234	234
Thread	G	G1/8" with Ermeto-Fitting L8	-	-	-	-	-	-
Thread	G1	-	1/4" NPT	1/4" NPT	1/4" NPT	1/4" NPT	1/4" NPT	1/4" NPT
Diaphragm area	cm^2	120	280	530	530	1000	1000	1000
Spring range	bar	0.9 - 2.0	0.8 - 3.0	0.8 - 2.8	0.7 - 3.0	0.7 - 2.1	1.2 - 3.4	1.6 - 4.7
Minimum air pressure	bar	2.2	3.2	3.0	3.2	2.3	3.6	4.9
Regulating lift	mm	20	35	40	60	60	60	60
Weight	ca. kg	3.0	5.0	12.5	14.0	37.0	39.0	41.0

Dimensions in mm.

Type 27512 - Pneumatic Actuator - Globe Valve (on/off)

Pneumatic Actuators for Globe Valves (on/off)
Actuator - **spring to open**, air to close
maximum air pressure for operation 6.0 bar g
Actuator coating outside - Epoxy resin
Available options - on request only:
· Pneumatic actuator with override handwheel
Ambient temperature limit: -20°C / -4°F (253K) up to +80°C / 176°F (353K)

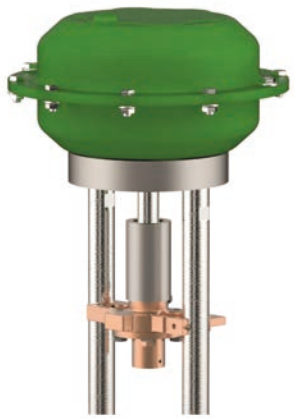

Overview - required actuator sizes for differential pressures

DN	Differential pressure in bar											
	1.0 - 5.0	5.1 - 7.0	7.1 - 14.0	14.1 - 17.0	17.1 - 19.0	19.1 - 22.0	22.1 - 26.0	26.1 - 29.0	29.1 - 35.0	35.1 - 37.0	37.1 - 45.0	45.1 - 50.0
10	A	A	A	A	A	A	A	A	A	A	A	A
15	A	A	A	A	A	A	A	A	A	A	A	A
20	A	A	A	A	A	A	A	A	A	A	A	A
25	A	A	A	A	A	A	A	A	A	A	A	A
32	A	A	A	A	A	A	A	A	A	B	C	C
40	A	A	A	A	A	A	A	B	C	C	C	C
50	A	A	A	A	B	C	C	C	C	C	C	C
65	B	B	B	C	C	C	C	C	C	C	D	E
80	B	B	C	C	C	C	D	E	E	E	E	E
100	B	C	C	D	E	E	E	E	E	E	E	E
150	D	E	E	E	E	E	o.r. - on request					

The differential pressures are based on the flow direction of the valve.
Differential pressures against the flow direction have to be requested separately.

Code in Table	Part No. Actuator
A	27512.15A6.3SPS
B	27512.35B6.6GPS
C	27512.60A6.6GPS
D	27512.60C6.7GPS
E	27512.75B6.2SPS

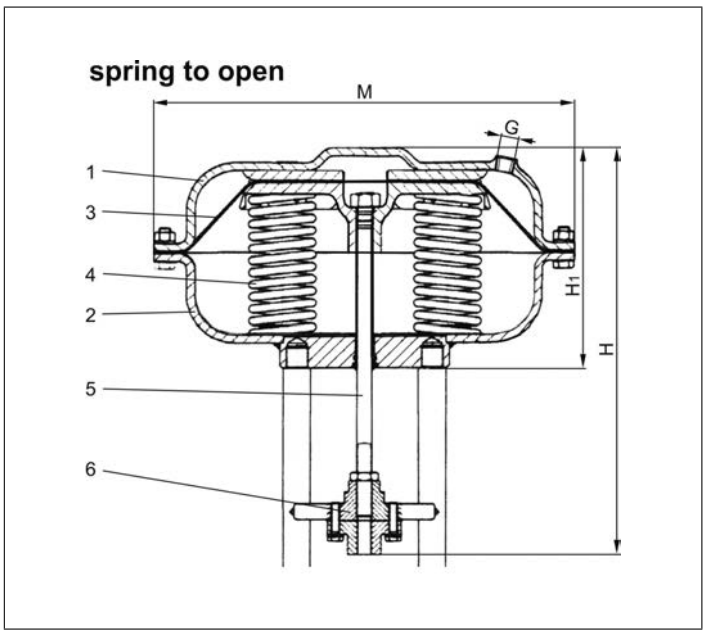

Materials		DIN EN	ASTM
1	Body	1.0333	A 619 Grade 1008
2	Body	1.0333	A 619 Grade 1008
3	Diaphragm	NBR	
4	Springs	1.1200	A 576 Grade 1045
5	Actuator stem	1.4301	A 276 Grade 304
6	Coupling	CC333G	B 148 UNS C95800

Type 27512	Technical data					
Part No. Actuator		27512				
		.15A6.3SPS	**.35B6.6GPS**	**.60A6.6GPS**	**.60C6.7GPS**	**.75B6.2SPS**
Diameter Actuator	M	162	210	310	310	430
Height	H	256	276	309	352	353
Height	H1	116	136	166	186	234
Thread	G	1/4" NPT	1/4" NPT	1/4" NPT	1/4" NPT	1/4" NPT
Diaphragm area	cm^2	120	280	530	530	1000
Spring range	bar	0.9 - 2.0	0.8 - 3.0	0.8 - 2.8	0.7 - 3.0	0.3 - 0.9
Minimum air pressure	bar	6.0	6.0	6.0	6.0	6.0
Regulating lift	mm	20	35	40	60	60
Weight	ca. kg	3.0	5.0	12.5	14.0	37.0

Dimensions in mm.

Edition 2022-11

Type 27512 - Pneumatic Actuator - Control Valve

Pneumatic Actuators for Control Valves
Actuator - **spring to open**, air to close
maximum air pressure for operation 6.0 bar g
Actuator coating outside - Epoxy resin
Available options - on request only:
· Pneumatic actuator with override handwheel
Ambient temperature limit: -20°C / -4°F (253K) up to +80°C / 176°F (353K)

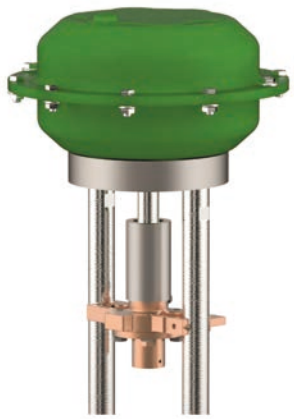

Overview - required actuator sizes for differential pressures

DN	Differential pressure in bar								
	1.0 - 5.0	5.1 - 13.0	13.1 - 15.0	15.1 - 21.0	21.1 - 23.0	23.1 - 29.0	29.1 - 34.0	34.1 - 37.0	37.1 - 50.0
10	A	A	A	A	A	A	A	A	A
15	A	A	A	A	A	A	A	A	A
20	A	A	A	A	A	A	A	A	A
25	A	A	A	A	A	A	A	A	A
32	B	B	B	B	B	B	B	B	C
40	B	B	B	B	B	B	B	C	C
50	B	B	B	B	C	C	C	C	C
65	C	C	C	C	C	C	C	E	E
80	C	C	C	C	D	E	E	E	E
100	C	C	D	E	E	E	E	E	E
150	D	E	E	E	E	o.r. - on request			

The differential pressures are based on the flow direction of the valve.
Differential pressures against the flow direction have to be requested separately.

Code in Table	Part No. Actuator
A	27512.15A6.3SPS
B	27512.35B6.6GPS
C	27512.60A6.6GPS
D	27512.60C6.7GPS
E	27512.75B6.2SPS

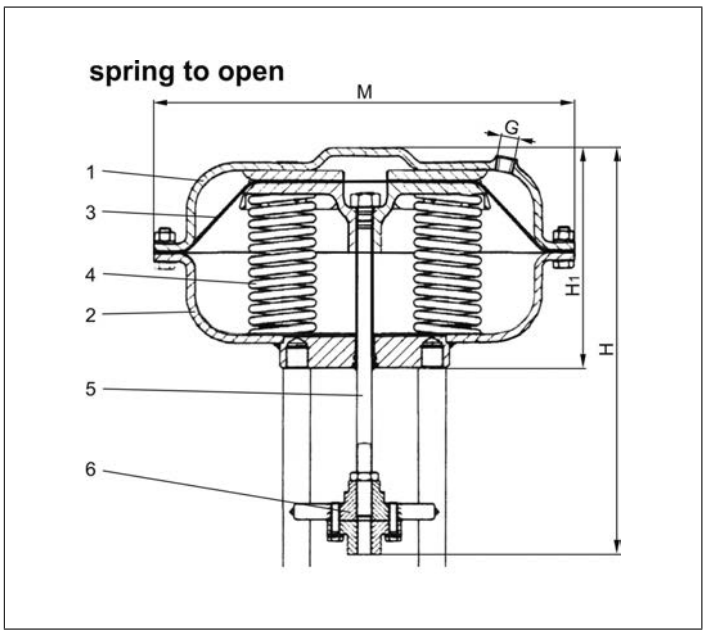

Materials		DIN EN	ASTM
1	Body	1.0333	A 619 Grade 1008
2	Body	1.0333	A 619 Grade 1008
3	Diaphragm	NBR	
4	Springs	1.1200	A 576 Grade 1045
5	Actuator stem	1.4301	A 276 Grade 304
6	Coupling	CC333G	B 148 UNS C95800

Type 27512	Technical data					
Part No. Actuator		27512				
		.15A6.3SPS	**.35B6.6GPS**	**.60A6.6GPS**	**.60C6.7GPS**	**.75B6.2SPS**
Diameter Actuator	M	162	210	310	310	430
Height	H	256	276	309	352	353
Height	H1	116	136	166	186	234
Thread	G	1/4" NPT	1/4" NPT	1/4" NPT	1/4" NPT	1/4" NPT
Diaphragm area	cm^2	120	280	530	530	1000
Spring range	bar	0.9 - 2.0	0.8 - 3.0	0.8 - 2.8	0.7 - 3.0	0.3 - 0.9
Minimum air pressure	bar	6.0	6.0	6.0	6.0	6.0
Regulating lift	mm	20	35	40	60	60
Weight	ca. kg	3.0	5.0	12.5	14.0	37.0

Dimensions in mm.

Actuated Valves and Actuators

Type 27514 - Pneumatic Actuator - Globe Valve (on/off)

Pneumatic Actuators for Globe Valves (on/off)
Actuator - **spring to close**, air to open
maximum air pressure for operation 6.0 bar (Tripel - Actuator: maximum air pressure 5 bar)
Actuator coating: Delta Seal GZ (silver-grey)
Corrosion-protection class C5-M acc. to DIN EN ISO 12944
Available options - on request only:
· Pneumatic actuator with override handwheel
Ambient temperature limit: -40°C / -40°F (233K),
Actuator **J** -20°C / -4°F (253K) up to +100°C / 212°F (373K)

Overview - required actuator sizes for differential pressures

DN	Differential pressure in bar											
	1.0 - 6.0	6.1 - 10.0	10.1 - 12.0	12.1 - 14.0	14.1 - 18.0	18.1 - 26.0	26.1 - 29.0	29.1 - 33.0	33.1 - 37.0	37.1 - 45.0	45.1 - 48.0	48.1 - 50.0
10	A	A	A	A	A	A	A	A	A	A	A	A
15	A	A	A	A	A	A	A	A	A	A	A	A
20	A	A	A	A	A	A	A	A	A	A	A	A
25	A	A	A	A	A	A	A	A	A	B	B	B
32	A	A	A	A	A	A	B	B	B	C	C	C
40	A	A	A	A	B	B	C	C	C	C	D	D
50	A	A	B	B	C	C	D	D	D	D	D	D
65	D	D	D	D	D	D	D	E	E	E	F	F
80	D	D	D	D	E	E	E	E	F	F	F	F
100	D	D	E	E	E	F	F	F	G	G	G	G
150	E	F	F	G	G	H	H	-	-	-	-	-
200	I	I	I	-	-	-	-	-	-	-	-	-

The differential pressures are based on the flow direction of the valve.
Differential pressures against the flow direction have to be requested separately.

Code in Table	Part No. Actuator
A	27514.DP30.2O22
B	27514.DP32.2O08
C	27514.DP32.2O20
D	27514.DP33.3O20
E	27514.DP34.5O15
F	27514.DP34.5O20
G	27514.DP34.T0PO (Tandem - Actuator)
H	27514.DP34.TRPO (Triple - Actuator)
I	27514.DP34.TRP1 (DN200 Triple - Actuator)

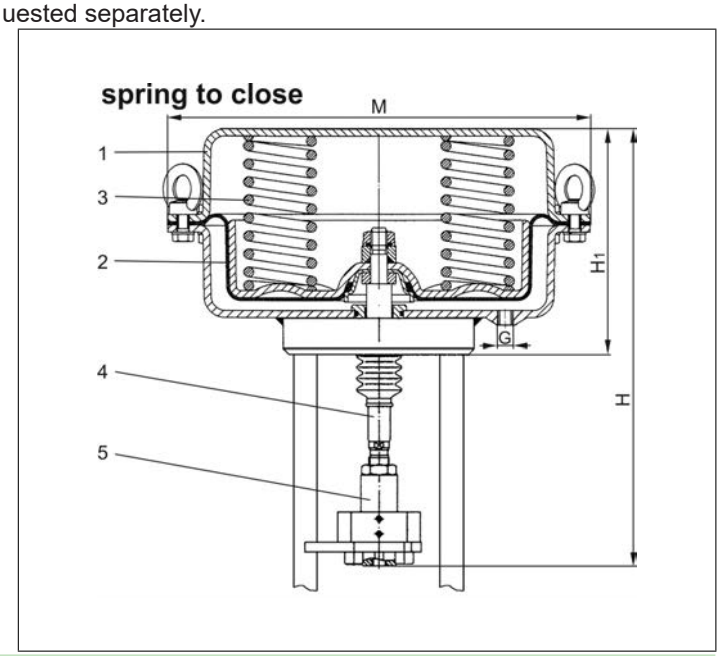

Materials		DIN EN	ASTM
1	Body	1.0335	A 622 Grade 1008
2	Diaphragm	NBR + tissue	
3	Springs	1.4310	A 313 Grade 301
4	Actuator stem	1.4571	A 276 Grade 316Ti
5	Coupling	1.4571	A 276 Grade 316Ti

Type 27514	Technical Data									
Part No. Actuator		27514								
		.DP30 .2O22	**.DP32 .2O08**	**.DP32 .2O20**	**.DP33 .3O20**	**.DP34 .5O15**	**.DP34 .5O20**	**.DP34 .T0PO**	**.DP34 .TRPO**	**.DP34 .TRP1**
Diameter Actuator	M	168	250	250	300	405	405	405	405	405
Height	H	ca. 244	ca. 240	ca. 240	ca. 300	ca. 375	ca. 375	ca. 635	ca. 884	ca. 884
Height	H1	122	124	124	166	228	228	450	672	672
Thread	G	G 1/4"	G 1/4"	G 1/4"	G 1/4"	G 3/8"	G 3/8"	G 3/8"	G 1/2"	G 1/2"
Diaphragm area	cm^2	80	250	250	400	800	800	1600 (2x800)	2400 (3x800)	2400 (3x800)
Spring range	bar	2.2 - 4.5	0.8 - 2.4	2.0 - 3.8	2.0 - 4.0	1.5 - 3.0	2.0 - 4.0	2.0 - 4.0	2.0 - 4.0	2.0 - 4.0
Minimum air pressure	bar	4.8	2.7	3.6	4.5	3.3	4.5	4.5	4.5	4.5
Regulating lift	mm	20	20	20	30	50	50	50	65	65
Weight	ca. kg	5.0	9.0	9.0	15.0	45.0	45.0	116.0	150.0	152.0

Dimensions in mm.

Edition 2022-11

Type 27514 - Pneumatic Actuator - Globe Valve (on/off)

Pneumatic Actuators for Globe Valves (on/off) including emergency handwheel
Actuator - **spring to close**, air to open
maximum air pressure for operation 6.0 bar (Tripel - Actuator: maximum air pressure 5 bar)
Actuator coating: Delta Seal GZ (silver-grey)
Corrosion-protection class C5-M acc. to DIN EN ISO 12944

Part No. 27514.DP3X.XXXXXX

Please find the differential pressure table and the permissible ambient temperatures listed in the standard data sheet

Materials		DIN EN	ASTM
1	Cap	1.4571	A 276 Grade 316Ti
2	Stem extension	1.4571	A 276 Grade 316Ti
3	Stem guide	1.4571	A 276 Grade 316Ti
4	O-ring	NBR	

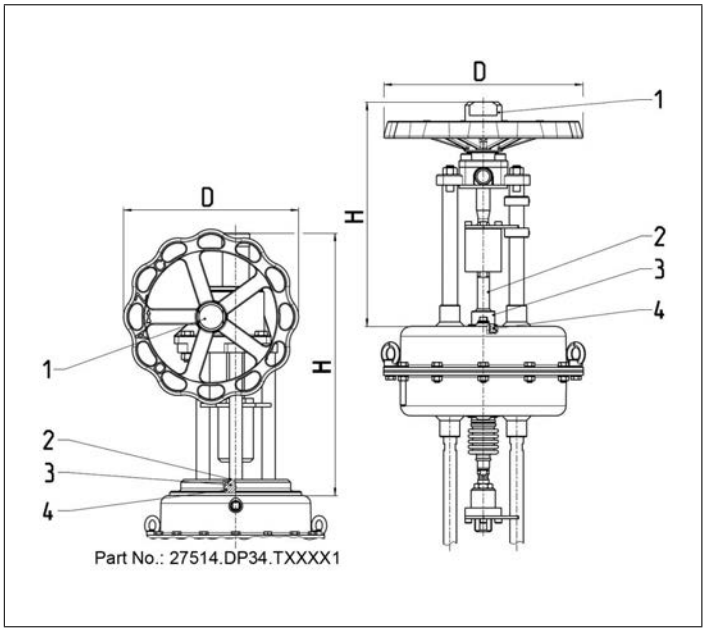

Type 27514	Technical Data										
Part No. Actuator		**27514.DP3X.XXXXXX**									
Dimension code	*X.XXX XXX	**0.2O2 2H1**	**2.2O0 8H1**	**2.2O2 0H1**	**3.3O2 0H1**	**4.5O1 5H1**	**4.5O2 0H1**	**4.T0P 1H1**	**4.T0P OH1**	**4.TRP 1H1**	**4.TRP OH1**
Diameter Handwheel	D	225	225	225	300	397	397	400	400	400	400
Height	H	284	284	284	297	458	458	613	613	613	613
Weight	ca. kg	10.0	14.0	14.0	20.0	62.0	62.0	157.0	157.0	191.0	191.0

Dimensions in mm.

Actuated Valves and Actuators

Type 27514 - Pneumatic Actuator - Control Valve

Pneumatic Actuators for Control Valves
Actuator - **spring to close**, air to open
maximum air pressure for operation 6.0 bar (Tripel - Actuator: maximum air pressure 5 bar)
Actuator coating: Delta Seal GZ (silver-grey)
Corrosion-protection class C5-M acc. to DIN EN ISO 12944
Available options - on request only:
· Pneumatic actuator with override handwheel
Ambient temperature limit: -40°C / -40°F (233K) up to +100°C / 212°F (373K)

Overview - required actuator sizes for differential pressures

DN	Differential pressure in bar									
	1.0 - 6.0	6.1 - 10.0	10.1 - 14.0	14.1 - 17.0	17.1 - 25.0	25.1 - 28.0	28.1 - 35.0	35.1 - 40.0	40.1 - 46.0	46.1 - 50.0
10	A	A	A	A	A	A	A	A	A	A
15	A	A	A	A	A	A	A	A	A	A
20	A	A	A	A	A	A	A	B	B	C
25	A	A	A	A	A	B	C	C	C	C
32	D	D	D	D	D	D	D	D	D	D
40	D	D	D	D	D	D	D	D	D	D
50	D	D	D	D	D	D	D	D	D	D
65	E	E	E	E	E	E	E	E	F	F
80	E	E	E	E	E	F	F	G	G	G
100	E	E	E	E	F	G	G	G	G	H
150	E	F	G	H	H	o.r. - on request				

The differential pressures are based on the flow direction of the valve.
Differential pressures against the flow direction have to be requested separately.

Code in Table	Part No. Actuator
A	27514.DP30.2O22
B	27514.DP32.2O08
C	27514.DP32.2O20
D	27514.DP33.3O20
E	27514.DP34.5O15
F	27514.DP34.5O20
G	27514.DP34.T0PO (Tandem - Actuator)
H	27514.DP34.TRPO (Triple - Actuator)

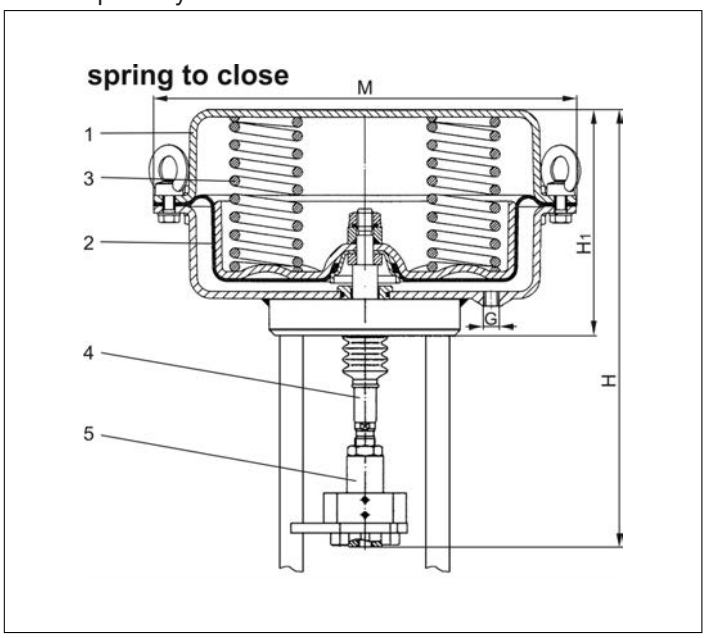

Materials		DIN EN	ASTM
1	Body	1.0335	A 622 Grade 1008
2	Diaphragm	NBR + tissue	
3	Springs	1.4310	A 313 Grade 301
4	Actuator stem	1.4571	A 276 Grade 316Ti
5	Coupling	1.4571	A 276 Grade 316Ti

Type 27514	Technical Data								
Part No. Actuator		27514							
		.DP30.2O22	**.DP32.2O08**	**.DP32.2O20**	**.DP33.3O20**	**.DP34.5O15**	**.DP34.5O20**	**.DP34.T0PO (Tandem)**	**.DP34.TRPO (Triple)**
Diameter Actuator	M	168	250	250	300	405	405	405	405
Height	H	ca. 244	ca. 240	ca. 240	ca. 300	ca. 375	ca. 375	ca. 635	ca. 884
Height	H1	122	124	124	166	228	228	450	672
Thread	G	G 1/4"	G 1/4"	G 1/4"	G 1/4"	G 3/8"	G 3/8"	G 3/8"	G 1/2"
Diaphragm area	cm^2	80	250	250	400	800	800	1600 (2x800)	2400 (3x800)
Spring range	bar	2.2 - 4.5	0.8 - 2.4	2.0 - 3.8	2.0 - 4.0	1.5 - 3.0	2.0 - 4.0	2.0 - 4.0	2.0 - 4.0
Minimum air pressure	bar	4.8	2.7	3.6	4.5	3.3	4.5	4.5	4.5
Regulating lift	mm	20	20	20	30	50	50	50	65
Weight	ca. kg	5.0	9.0	9.0	15.0	45.0	45.0	116.0	150.0

Dimensions in mm.

Edition 2022-11

Type 27514 - Pneumatic Actuator - Globe Valve (On/off and Control Valve)

Pneumatic Actuators for Type 11C01 - Globe Valve FullX

Actuator - **spring to close**, air to open
maximum air pressure for operation 6.0 bar
Actuator coating: Delta Seal GZ (silver-grey)
Corrosion-protection class C5-M acc. to DIN EN ISO 12944
Available options - on request only:
· Pneumatic actuator with override handwheel

Ambient temperature limit: -40°C / -40°F (233K) up to +100°C / 212°F (373K)

Materials		DIN EN	ASTM
1	Body	1.0335	A 622 Grade 1008
2	Diaphragm	NBR + tissue	
3	Springs	1.4310	A 313 Grade 301
4	Actuator stem	1.4571	A 276 Grade 316Ti
5	Coupling	1.4571	A 276 Grade 316Ti

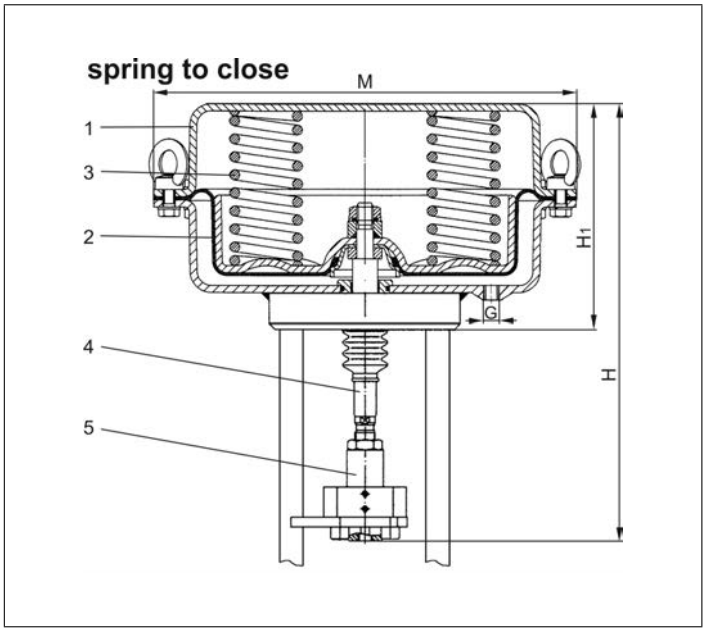

Type 27514	Technical Data									
Part No. Actuator						**27514**				
		.DP30 .2O22	**.DP32 .2O08**	**.DP32 .2O20**	**.DP33 .3O20**	**.DP34 .5O15**	**.DP34 .5O20**	**.DP34 .T0PO**	**.DP34 .TRPO**	**.DP34 .TRP1**
Diameter Actuator	M	168	250	250	300	405	405	405	405	405
Height	H	ca. 244	ca. 240	ca. 240	ca. 300	ca. 375	ca. 375	ca. 635	ca. 884	ca. 884
Height	H1	122	124	124	166	228	228	450	672	672
Thread	G	G 1/4"	G 1/4"	G 1/4"	G 1/4"	G 3/8"	G 3/8"	G 3/8"	G 1/2"	G 1/2"
Diaphragm area	cm^2	80	250	250	400	800	800	1600 (2x800)	2400 (3x800)	2400 (3x800)
Spring range	bar	2.2 - 4.5	0.8 - 2.4	2.0 - 3.8	2.0 - 4.0	1.5 - 3.0	2.0 - 4.0	2.0 - 4.0	2.0 - 4.0	2.0 - 4.0
Minimum air pressure	bar	4.8	2.7	3.6	4.5	3.3	4.5	4.5	4.5	4.5
Regulating lift	mm	20	20	20	30	50	50	50	65	65
Weight	ca. kg	5.0	9.0	9.0	15.0	45.0	45.0	116.0	150.0	152.0

Dimensions in mm.

Type 27514 - Pneumatic Actuator - Globe Valve (On/off and Control Valve)

Overview - required actuator sizes for differential pressures

DN	Body**	Differential pressure in bar									
		1,0 - 5,9	6,0 - 9,9	10,0 - 15,9	16,0 - 29,9	30,0 - 35,9	36,0 - 37,9	38,0 - 43,9	44,0 - 49,9	50,0 - 53,9	54,0 - 63,0
10	S/A/Y	A	A	A	A	A	A	A	A	A	A
15	S/A/Y	A	A	A	A	A	A	A	A	A	A
20	S/A/Y	A	A	A	A	A	B	B	B	B	C
25	S/A/Y	A	A	A	A	A	B	B	B	B	C
32	S	B	B	C	C	D	D	D	D	D	D
32	A/Y	E	E	E	E	E	E	E	E	E	E
40	S	B	B	C	C	D	D	D	D	D	D
40	A/Y	E	E	E	E	E	E	E	E	E	E
50	S	B	C	C	D	D	D	D	D	E	E
50	A/Y	E	E	E	E	E	E	E	E	E	E
10*	S/A/Y	A	A	A	A	A	A	A	B	B	B
15*	S/A/Y	A	A	A	A	A	A	A	B	B	B
20*	S/A/Y	A	A	A	A	A	A	B	B	B	B
25*	S/A/Y	A	A	A	A	A	A	B	B	B	B
32*	S/A/Y	B	B	C	C	D	D	D	D	D	D
40*	S/A/Y	B	B	C	C	D	D	D	D	D	D
50*	S/A/Y	B	C	C	D	D	D	D	D	E	E

* with bellows or control version or throttle version, ** S = Straight body, A = Angle type, Y = Y type

The differential pressures are based on the flow direction of the valve.
Differential pressures against the flow direction have to be requested separately.

Code in Table	Part-No. Actuator
A	27514.DP30.2O22
B	27514.DP32.2O08
C	27514.DP32.2O20
D	27514.DP33.3O20
E	27514.DP34.5O15

Type 27515 - Pneumatic Actuator - Globe Valve (on/off)

Pneumatic Actuators for Globe Valves (on/off)
Actuator - **spring to open**, air to close
maximum air pressure for operation 6.0 bar
Actuator coating: Delta Seal GZ (silver-grey)
Corrosion-protection class C5-M acc. to DIN EN ISO 12944
Available options - on request only:
· Pneumatic actuator with override handwheel
Ambient temperature limit: -40°C / -40°F (233K) up to +100°C / 212°F (373K)

Overview - required actuator sizes for differential pressures

DN	Differential pressure in bar						
	1.0 - 13.0	13.1 - 18.0	18.1 - 20.0	20.1 - 25.0	25.1 - 35.0	35.1 - 45.0	45.1 - 50.0
10	A	A	A	A	A	A	A
15	A	A	A	A	A	A	A
20	A	A	A	A	A	A	A
25	A	A	A	A	A	A	B
32	A	A	A	A	B	B	B
40	A	A	A	B	B	B	B
50	A	B	B	B	B	B	B
65	B	B	B	B	B	C	C
80	B	B	B	C	C	D	D
100	B	C	C	D	D	D	o.r.
150	D	D	D	o.r. - on request			

The differential pressures are based on the flow direction of the valve.
Differential pressures against the flow direction have to be requested separately.

Code in Table	Part No. Actuator
A	27515.DP30.2S06
B	27515.DP32.3S02
C	27515.DP33.3S02
D	27515.DP34.5S02

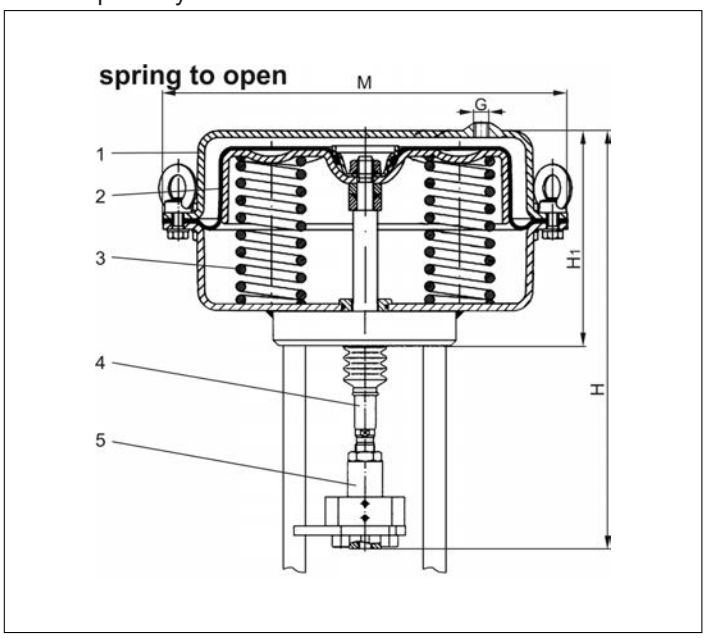

Materials		DIN EN	ASTM
1	Body	1.0335	A 622 Grade 1008
2	Diaphragm	NBR + tissue	
3	Springs	1.4310	A 313 Grade 301
4	Actuator stem	1.4571	A 276 Grade 316Ti
5	Coupling	1.4571	A 276 Grade 316Ti

Type 27515	Technical data				
Part No. Actuator		**27515**			
		.DP30.2S06	**.DP32.3S02**	**.DP33.3S02**	**.DP34.5S02**
Diameter Actuator	M	168	250	300	405
Height	H	ca. 244	ca. 240	ca. 300	ca. 375
Height	H1	122	124	166	228
Thread	G	G 1/4"	G 1/4"	G 1/4"	G 3/8"
Diaphragm area	cm^2	80	250	400	800
Spring range	bar	0.6 - 1.5	0.2 - 1.0	0.2 - 1.0	0.2 - 1.0
Minimum air pressure	bar	6.0	6.0	6.0	6.0
Regulating lift	mm	20	30	30	50
Weight	ca. kg	5.0	9.0	15.0	45.0

Dimensions in mm.

Actuated Valves and Actuators

Type 27515 - Pneumatic Actuator - Globe Valve (on/off)

Pneumatic Actuators for Globe Valves (on/off) including emergency handwheel
Actuator - **spring to open**, air to close
maximum air pressure for operation 6.0 bar
Actuator coating: Delta Seal GZ (silver-grey)
Corrosion-protection class C5-M acc. to DIN EN ISO 12944

Part No. 27515.DP3X.XXXXXX

Please find the differential pressure table and the permissible ambient temperatures listed in the standard data sheet

Materials		DIN EN	ASTM
1	Cap	1.4571	A 276 Grade 316Ti
2	Stem extension	1.4571	A 276 Grade 316Ti
3	Stem guide	1.4571	A 276 Grade 316Ti
4	O-ring	NBR	

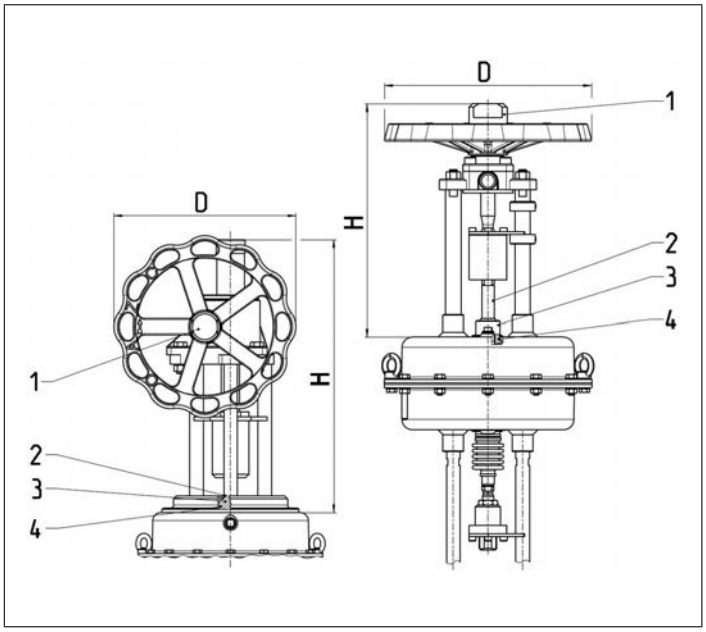

Type 27515	Technical data				
Part No. Actuator		**27515.DP3X.XXXXXX**			
Dimesion code	*X.XXX XXX	**0.2S0 6H1**	**2.3S0 2H1**	**3.3S0 2H1**	**4.5S0 2H1**
Diameter Handwheel	D	225	225	300	397
Height	H	284	284	297	458
Weight	ca. kg	10.0	14.0	20.0	62.0

Dimensions in mm.

Edition 2022-11

Type 27515 - Pneumatic Actuator - Control Valve

Pneumatic Actuators for Control Valves
Actuator - **spring to open**, air to close
maximum air pressure for operation 6.0 bar
Actuator coating: Delta Seal GZ (silver-grey)
Corrosion-protection class C5-M acc. to DIN EN ISO 12944
Available options - on request only:
· Pneumatic actuator with override handwheel
Ambient temperature limit: -40°C / -40°F (233K) up to +100°C / 212°F (373K)

Overview - required actuator sizes for differential pressures

DN	Differential pressure in bar 1.0 - 21.0	21.1 - 45.0	45.1 - 50.0
10	A	A	A
15	A	A	A
20	A	A	A
25	A	A	B
32	B	B	B
40	B	B	B
50	B	B	B
65	D	D	D
80	D	D	D
100	D	D	o.r.
150	D	o.r. - on request	

The differential pressures are based on the flow direction of the valve.
Differential pressures against the flow direction have to be requested separately.

Code in Table	Part No. Actuator
A	27515.DP30.2S06
B	27515.DP32.3S02
C	27515.DP33.3S02
D	27515.DP34.5S02

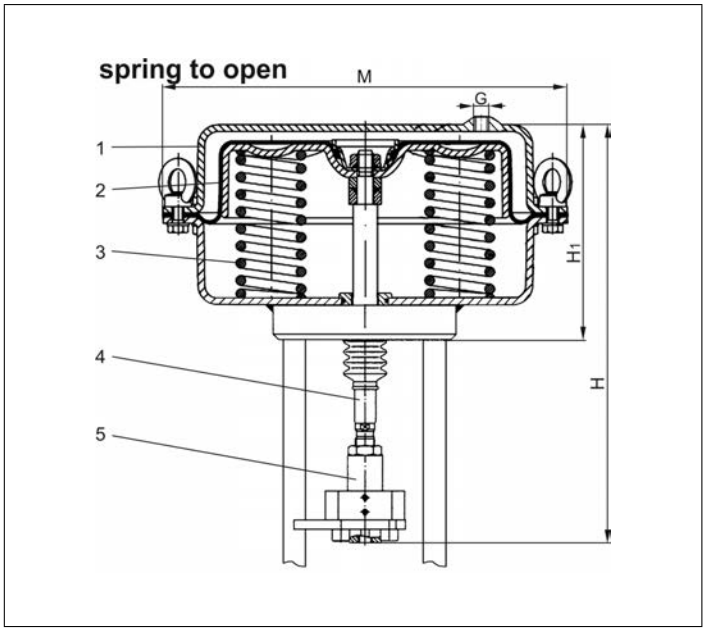

Materials		DIN EN	ASTM
1	Body	1.0335	A 622 Grade 1008
2	Diaphragm	NBR + tissue	
3	Springs	1.4310	A 313 Grade 301
4	Actuator stem	1.4571	A 276 Grade 316Ti
5	Coupling	1.4571	A 276 Grade 316Ti

Type 27515	Technical data				
Part No. Actuator		**27515**			
		.DP30.2S06	**.DP32.3S02**	**.DP33.3S02**	**.DP34.5S02**
Diameter Actuator	M	168	250	300	405
Height	H	ca. 244	ca. 240	ca. 300	ca. 375
Height	H1	122	124	166	228
Thread	G	G 1/4"	G 1/4"	G 1/4"	G 3/8"
Diaphragm area	cm^2	80	250	400	800
Spring range	bar	0.6 - 1.5	0.2 - 1.0	0.2 - 1.0	0.2 - 1.0
Minimum air pressure	bar	6.0	6.0	6.0	6.0
Regulating lift	mm	20	30	30	50
Weight	ca. kg	5.0	9.0	15.0	45.0

Dimensions in mm.

Actuated Valves and Actuators

Type 01353 - Actuated Trailervalve

Cryogenic-Globe Valves with Pneumatic Actuator, PN50 (DN65=PN45)

air pressure for operation 6,0 bar g (maximum 10.0 bar g), push-in connection 8mm
Stainless steel body and topwork,
Actuator - air opens, spring closes
" live loaded " gland packing
" cleaned and degreased for oxygen service " - the actuator is not cleaned and degreased for oxygen
Part No. 01353.X.T0**
* Butt weld connection for stainless steel pipes acc. to ISO 1127 or ASTM A312
Part No. 01353.X.T0*4
Socket weld connection for stainless steel pipes acc. to ISO 1127 or ASTM A312
Available options - on request only:

· Welded stainless steel stubs acc. to ISO 1127 or ASTM A312 - length FF + 200mm
· Further pipe wall thicknesses
· Weather protection hood

Applications:
Approved for air gases, vapours and cryogenic liquefied gases incl. LNG.
Working temperature: -196°C / -321°F (77K) up to +120°C / +248°F (393K)
Ambient temperature actuator: -50°C / -58°F (223K) up to +70°C / +158°F (343K)

Materials		DIN EN	ASTM
1	Body	1.4308	A 351 CF8
2	Valve seal up to DN50	PTFE / Carbon filled (25%)	
2a	Valve seal from DN65	PTFE	
3	Disc	1.4301	A 276 Grade 304
4	Bonnet gasket	PTFE	
5	Headpiece	1.4301	A 276 Grade 304
6	Bolts	1.4301/A2	A 194 B8
7	Elongation tube	1.4306	A 312 TP 304L
8	Stem	1.4301	A 276 Grade 304
9	Spring	1.4571	A 313 Grade 316Ti
10	Flange	1.4301	A 276 Grade 304
11	Headpiece	1.4301	A 276 Grade 304
12	Gland packing	Graphite / PTFE / MICA	
13	Gland nut	1.4571	A 276 Grade 316Ti
14	Pillars	1.4301	A 276 Grade 304
15	Bush	CW452K	B 159 UNS C51900
16	Actuator	Rubber	

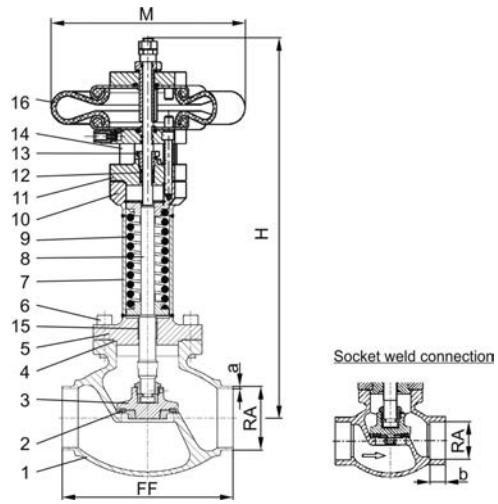

KOREA GAS SAFETY CORPORATION

Type 01353 - Standard design	Technical data								
Nominal size	**DN**	**20**	**20**	**25**	**40**	**40**	**50**	**65**	**80**
Dimension code	.X.	2021	2026	2533	4042	4048	5060	657x	8088
Face-to-face dimension	FF	100	100	115	130	130	155	205	245
Height	H	443	443	444	441	441	420	448	467
Outside pipe-Ø ISO 1127	RA	21.3	26.9	33.7	42.4	48.3	60.3	76.1	88.9
Wall thickness pipe ISO 1127	a	2.0	2.0	2.0	2.0	2.0	2.0	2.9	3.2
Outside pipe-Ø ASTM A312	RA	21.34	26.67	33.40	42.16	48.26	60.33	73.03	88.90
Wall thickness pipe ASTM A312	a	dimensions acc. to S10 or S40							
Socket depth	b	10	10	13	13	13	16	16	16
Actuator-Ø	M	229	229	229	229	229	229	229	229
Weight	ca. kg	7.2	7.2	9.1	10.5	10.5	14.5	17.4	22.5
*Kvs-Value	m^3/h	4.3	4.3	11.5	22.6	22.6	37.1	71.1	104.0
*Cv-Value	gal/min	5.0	5.0	13.4	23.9	26.3	43.2	82.9	121.3
Stroke	mm	10	10	14	14	14	14	22	25
Δ P max	bar	50	50	50	16	16	10	3	4
Δ P max with special spring	bar	-	-	-	31	31	18	10	-

Dimensions in mm. * These figures refer to measurements for the flow direction.

Edition 2022-11

Actuated Valves and Actuators

Type 09343 - Actuated Gate Valve

Cryogenic-Gate Valves with Pneumatic Actuator, PN50 (DN65=PN45)

air pressure for operation 4.0 bar g (maximal 10.0 bar g), push-in connection 8mm
Stainless steel body and topwork,
Actuator - air opens, spring closes
one way tightening (in flow direction),
"live loaded" gland packing
"cleaned and degreased for oxygen service" - the actuator is not cleaned and degreased for oxygen
Working pressure: 5 - 50 bar, Leakage rate A acc. to DIN EN 12266
Working pressure: 0.7 - 4.9 bar, Leakage rate B acc. to DIN EN 12266

Part No. 09343.X.T02*
* Butt weld connection for stainless steel pipes acc. to ISO 1127 or ASTM A312
Part No. 09343.X.T024
Socket weld connection for stainless steel pipes acc. to ISO 1127 or ASTM A312

Available options - on request only:
· Further pipe wall thicknesses
· Weather protection hood

Applications:
Approved for air gases, vapours and cryogenic liquefied gases incl. LNG.
Working temperature: -196°C / -321°F (77K) up to +120°C / +248°F (393K)
Ambient temperature actuator: -50°C / -58°F (223K) up to +70°C / +158°F (343K)

Materials		DIN EN	ASTM
1	Body	1.4308	A 351 CF8
2	Valve seal	PTFE / Carbon filled (25%)	
3	Disc	CW614N	B 283 UNS C38500
4	Wedge	1.4308	A 351 CF8
5	Stem	1.4301	A 276 Grade 304
6	Bonnet gasket	PTFE	
7	Headpiece	1.4308	A 351 CF8
8	Bolts	1.4301/A2	A 194 B8
9	Elongation tube	1.4541	A 213 TP 321
10	Spring	1.4571	A 313 Grade 316Ti
11	Flange	1.4301	A 276 Grade 304
12	Headpiece	1.4301	A 276 Grade 304
13	Gland packing	Graphite / PTFE / MICA	
14	Gland nut	1.4305	A 276 Grade 303
15	Pillars	1.4301	A 276 Grade 304
16	Bush	CW452K	B 159 UNS C51900
17	Actuator	Rubberchuk	

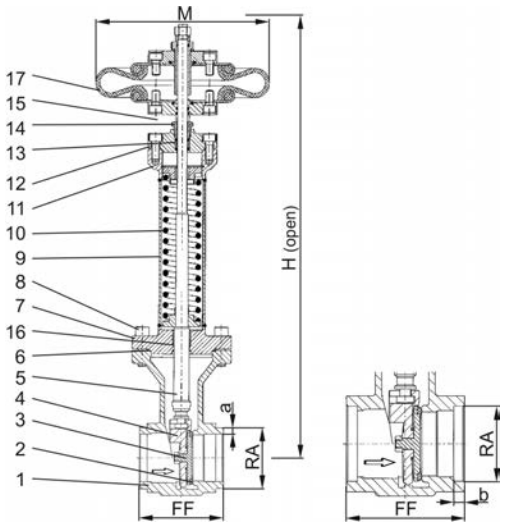

Type 09343 - Standard design	Technical data						
Nominal size	**DN**	**25**	**40**	**50**	**65**	**80**	**100**
Dimension code	.X.	2533	4048	5060	657x	8088	0114
Face-to-face dimension	FF	133	133	110	110	110	130
Height	H	500	560	590	630	650	880
Outside pipe-Ø ISO 1127	RA	33.7	48.3	60.3	76.1	88.9	114.3
Wall thickness pipe ISO 1127	a	2.9	2.0	2.0	2.9	3.2	3.2
Outside pipe-Ø ASTM A312	RA	33.4	48.26	60.33	73.03	88.90	114.30
Wall thickness pipe ASTM A312	a	dimensions acc. to S10 or S40					
Socket depth	b	8	13	16	16	16	20
Actuator-Ø	M	229	229	229	229	229	229
Weight	ca. kg	9.9	11.1	13.5	14.9	17.5	30.2
*Kvs-Value	m^3/h	43	93	125	227	310	792
*Cv-Value	gal/min	51	111	149	264	361	924

Dimensions in mm. * These figures refer to measurements for the flow direction.

Actuated Valves and Actuators

Type 09443 - Actuated Gate Valve

Cryogenic-Gate Valves with Pneumatic Actuator, PN50

air pressure for operation 4.0 bar g (maximal 10.0 bar g),
Stainless steel body and topwork,
Actuator - air opens, spring closes
one way tightening (in flow direction),
" live loaded " gland packing
" cleaned and degreased for oxygen service " - the actuator is not cleaned and degreased for oxygen
Working pressure: 5 - 50 bar, Leakage rate A acc. to DIN EN 12266
Working pressure: 0.7 - 4.9 bar, Leakage rate B acc. to DIN EN 12266

Part No. 09443.X.T021
Male thread for union connection

Available options - on request only:
· Weather protection hood

Applications:
Approved for air gases, vapours and cryogenic liquefied gases incl. LNG.
Working temperature: -196°C / -321°F (77K) up to +120°C / +248°F (393K)
Ambient temperature actuator: -50°C / -58°F (223K) up to +70°C / +158°F (343K)

Materials		DIN EN	ASTM
1	Body	1.4308	A 351 CF8
2	Valve seal	PTFE / Carbon filled (25%)	
3	Disc	CW452K	B 159 UNS C51900
4	Wedge	1.4308	A 351 CF8
5	Stem	1.4301	A 276 Grade 304
6	Bonnet gasket	PTFE	
7	Headpiece	1.4301	A 276 Grade 304
8	Bolts	1.4301/A2	A 194 B8
9	Elongation tube	1.4541	A 213 TP 321
10	Spring	1.4571	A 313 Grade 316Ti
11	Flange	1.4301	A 276 Grade 304
12	Headpiece	1.4301	A 276 Grade 304
13	Gland packing	Graphite / PTFE / MICA	
14	Gland nut	1.4305	A 276 Grade 303
15	Pillars	1.4301	A 276 Grade 304
16	Bush	CW452K	B 159 UNS C51900
17	Actuator	Rubberchuk	

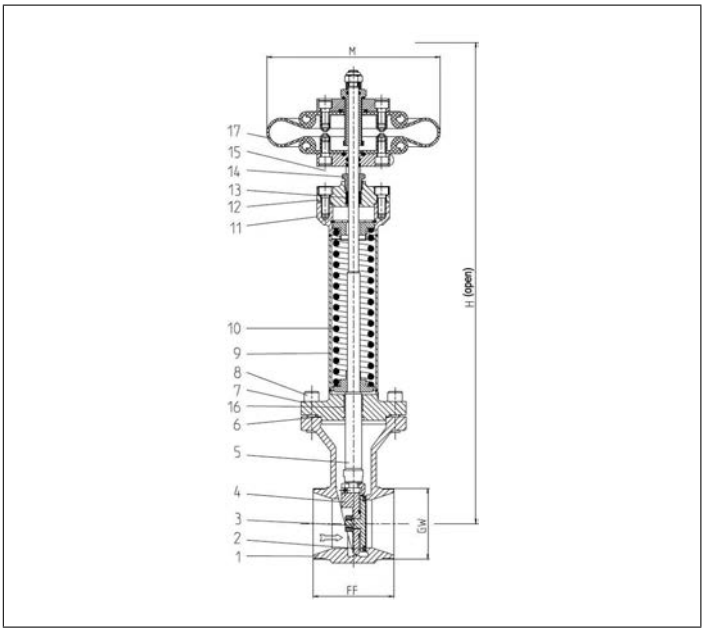

Type 09443 - Standard design	Technical data				
Nominal size	**DN**	**25**	**40**	**50**	**65**
Dimension code	.X.	0250	0400	0500	0650
Thread (G- / M-thread)	GW	- / M40x2	G2 / M65x2	G2-1/2 / M78x2	G3 / M88x2
Face-to-face dimension	FF	133	133	110	110
Height	H	500	560	590	630
Actuator-Ø	M	229	229	229	229
Weight	ca. kg	9.9	11.1	13.5	14.9
*Kvs-Value	m^3/h	43	93	125	227
*Cv-Value	gal/min	51	111	149	264

Dimensions in mm. * These figures refer to measurements for the flow direction.

Edition 2022-11

Actuated Valves and Actuators

Type 17800 - Actuated Butterfly Valve

Cryogenic Butterfly Valves Buttweld Type, PN16

With pneumatic actuator
Also available in PN10 and PN25
Type test approval acc. to DIN 12567 for LNG use
“ Fire safe ” type test approval acc. to EN ISO 10497

Available options - on request only:
· Further connection types
· Pressure range
· Accessories

Applications:
Approved for LNG Marine applications. Other applications on request only.
Working temperature: -196°C / -321°F (77K) up to +100°C / +212°F (373K)

Materials		DIN EN	ASTM
1	Actuator	Aluminum Aludur coated	
2	Bracket	1.4404/1.4571	316L/316Ti
3	Flange	1.4404	316L
4	Gland packing	Graphite braid	
5	Gland packing	Graphite	
6	Gland packing	Graphite braid	
7	Body	1.4408	316
8	Disc	1.4408	316
9	Clamp ring	1.4404/1.4571	316L/316Ti
10	Seal	1.4571	316Ti
11	CSI ring	Inconel	
12	CSE ring	Inconel	
13	Shaft	1.4980/1.4571	-/316Ti

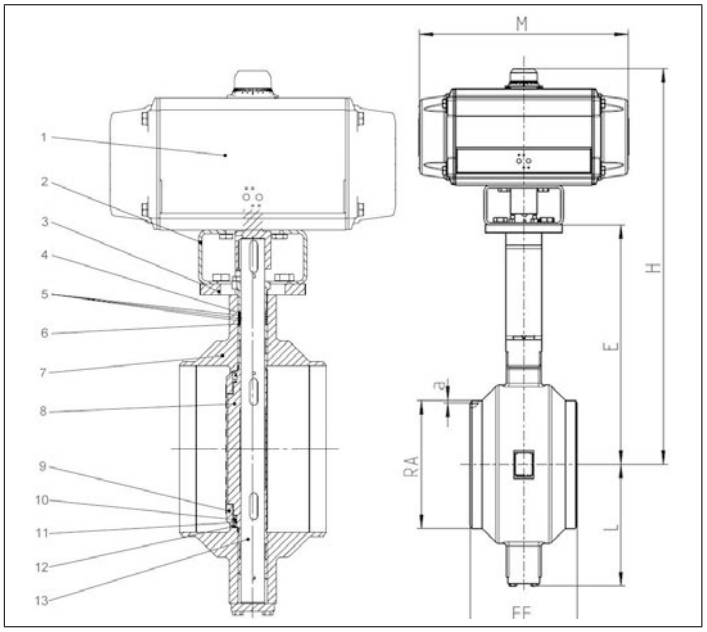

Type 17800 - Standard design	Technical data								
Nominal size	**DN**	**80**	**100**	**150**	**200**	**250**	**300**	**350**	**400**
Face-to-face dimension	FF	180	190	210	230	250	270	290	310
Max. Height (depending on PN)	H	695	768	952	1020	1139	1165	1178	1273
Outside pipe-Ø ISO 1127	RA	88.9	114.3	168.3	219.1	273.0	323.9	355.6	406.4
Wall thickness pipe ISO 1127	a	3.2	3.6	4.5	6.3	7.1	8.0	8.0	8.8
Outside pipe-Ø ASTM A312	RA	on request							
Wall thickness pipe ASTM A312	a	on request							
Length	E	428	462	503	540	579	605	625	685
Length	L	129	158	204	241	281	307	333	383
Length (depending on PN)	M	333	423	605	710	876	876	1536	1742
Max. Weight (depending on PN)	ca. kg	31.0	47.0	124.0	170.0	325.0	355.0	613.0	838.0
*Kvs-Value	m^3/h	118	258	654	1443	2431	3720	5120	7321
*Cv-Value	gal/min	137	300	760	1680	2850	4314	5953	8513

Dimensions in mm. * These figures refer to measurements for the flow direction.

Actuated Valves and Actuators

Type 17800 - Actuated Butterfly Valve, Top Entry

Cryogenic Butterfly Valves Top Entry Buttweld Type, PN16

With pneumatic actuator
Also available in PN10 and PN25
Type test approval acc. to DIN 12567 for LNG use
“ Fire safe ” type test approval acc. to EN ISO 10497

Available options - on request only:
· Further connection types
· Pressure range
· Accessories

Applications:
Approved for LNG Marine applications. Other applications on request only.
Working temperature: -196°C / -321°F (77K) up to +100°C / +212°F (373K)

Materials		DIN EN	ASTM
1	Actuator	Aluminum Aludur coated	
2	Bracket	1.4404/1.4571	316L/316Ti
3	Flange	1.4404	316L
4	Gland packing	Graphite braid	
5	Gland packing	Graphite	
6	Gland packing	Graphite braid	
7	Topwork	1.4408	316
8	CSI ring	Inconel	
9	Body	1.4408	316
10	Clamp ring	1.4404/1.4571	316L/316Ti
11	Disc	1.4408	316
12	Shaft	1.4980/1.4571	-/316Ti
13	Seal	1.4571	316Ti
14	CSI ring	Inconel	
15	CSE ring	Inconel	

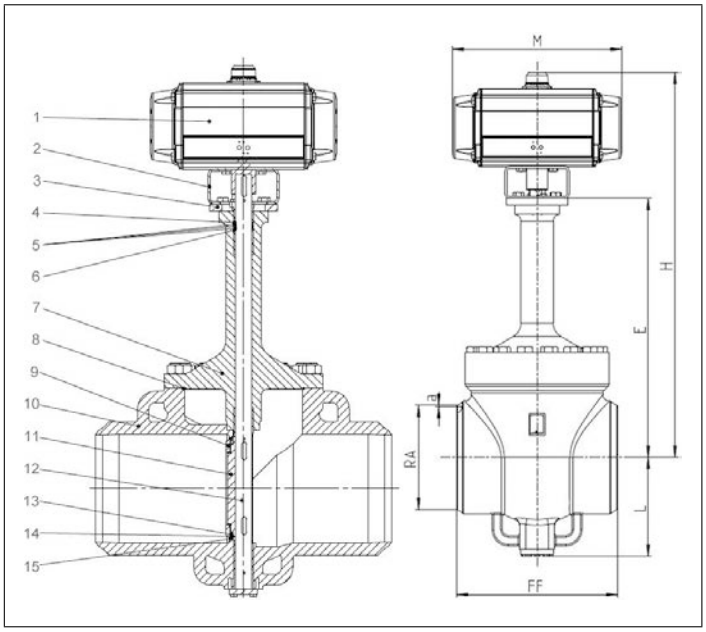

Type 17800 - Standard design	Technical data							
Nominal size	**DN**	**100**	**150**	**200**	**250**	**300**	**350**	**400**
Face-to-face dimension	FF	305	403	418	457	502	762	838
Max. Height (depending on PN)	H	968	1152	1220	1339	1365	1378	1473
Outside pipe-Ø ISO 1127	RA	114.3	168.3	219.1	273.0	323.9	355.6	406.4
Wall thickness pipe ISO 1127	a	3.6	4.5	6.3	7.1	8.0	8.0	8.8
Outside pipe-Ø ASTM A312	RA	on request						
Wall thickness pipe ASTM A312	a	on request						
Length	E	462	503	540	579	605	625	685
Length	L	158	204	241	281	307	333	383
Length (depending on PN)	M	423	605	710	876	876	1536	1742
Max. Weight (depending on PN)	ca. kg	67.0	149.0	230.0	420.0	475.0	803.0	1113.0
*Kvs-Value	m^3/h	258	654	1443	2431	3720	5120	7321
*Cv-Value	gal/min	300	760	1680	2850	4314	5953	8513

Dimensions in mm. * These figures refer to measurements for the flow direction.

Edition 2022-11

Accessories for Actuated Valves
Type 40060 - Solenoid Valve

3/2 way Solenoid Valve

direct acting solenoid valve DN3, fast acting, body in brass, protecting class IP65, with cable plug for cable-Ø7 mm, circuit function: power free - outlet balanced, Pressure range 0 - 10.0 bar, Voltage tolerance ±10%, with flat seal and fixing screw

Port connection 1/4" G (BSPP) thread: X= 0
Port connection 1/4" NPT thread: X= 6

Standard version

Version with NBR sealing
for neutral medium like air and water
Medium temperature: 0°C / 32°F up to +80°C / 176°F
Ambient temperature: 0°C / 32°F up to max. +55°C / 131°F

Part No. 40060.020X.C24A000 - Operating voltage 24V, AC (50Hz)
Part No. 40060.020X.C11A000 - Operating voltage 110V, AC (50Hz)
Part No. 40060.020X.C23A000 - Operating voltage 230V, AC (50Hz)
Part No. 40060.020X.C24D000 - Operating voltage 24V, DC
Part No. 40060.020X.C48D000 - Operating voltage 48V, DC

Version with EPDM sealing
for oil and fat-free medium
Medium temperature: -30°C / -22°F up to +90°C / 194°F
Ambient temperature: -30°C / -22°F up to max. +55°C / 131°F

Part No. 40060.020X.C24A00E - Operating voltage 24V, AC (50Hz)
Part No. 40060.020X.C11A00E - Operating voltage 110V, AC (50Hz)
Part No. 40060.020X.C23A00E - Operating voltage 230V, AC (50Hz)
Part No. 40060.020X.C24D00E - Operating voltage 24V, DC
Part No. 40060.020X.C48D00E - Operating voltage 48V, DC

Version with FKM sealing
for neutral medium like air and water
Medium temperature: 0°C / 32°F up to +90°C / 194°F
Ambient temperature: 0°C / 32°F up to max. +55°C / 131°F
Part No. 40060.020X.C24A0AF - Operating voltage 24V, AC (50Hz)
Part No. 40060.020X.C11A0AF - Operating voltage 110V, AC (50Hz)
Part No. 40060.020X.C23A0AF - Operating voltage 230V, AC (50Hz)
Part No. 40060.020X.C24D0AF - Operating voltage 24V, DC
Part No. 40060.020X.C48D0AF - Operating voltage 48V, DC

Version with FKM sealing, cleaned and degreased, suitable for oxygen
Part No. 40060.020X.C24AO2F - Operating voltage 24V, AC (50Hz)
Part No. 40060.020X.C11AO2F - Operating voltage 110V, AC (50Hz)
Part No. 40060.020X.C23AO2F - Operating voltage 230V, AC (50Hz)
Part No. 40060.020X.C24DO2F - Operating voltage 24V, DC
Part No. 40060.020X.C48DO2F - Operating voltage 48V, DC

Available options - on request only:
· other port connection (G1/8), body and seat material 1.4401
· circuit functions: power free - outlet pressure loaded

Accessories for Actuated Valves
Type 41060 - Solenoid Valve

3/2 way Solenoid Valve, including fixing accessories

direct acting solenoid valve DN3, fast acting, body in brass, protecting class IP65, with cable plug for cable-Ø7 mm, circuit function: power free - outlet balanced, Pressure range 0 - 10.0 bar, Voltage tolerance ±10%, with flat seal and fixing screw

Version with NBR sealing
port connections G (BSPP) 1/4 female thread, for neutral medium like air and water
Medium temperature: 0°C / 32°F up to +80°C / 176°F
Ambient temperature: 0°C / 32°F up to max. +55°C / 131°F

Standard version

for actuators type 27511 and 27521
Part No. 41060.0200.C24A000 - Operating voltage 24V, AC (50Hz)
Part No. 41060.0200.C11A000 - Operating voltage 110V, AC (50Hz)
Part No. 41060.0200.C23A000 - Operating voltage 230V, AC (50Hz)
Part No. 41060.0200.C24D000 - Operating voltage 24V, DC
Part No. 41060.0200.C48D000 - Operating voltage 48V, DC

for actuators type 27512 and 27522
Part No. 41060.0210.C24A000 - Operating voltage 24V, AC (50Hz)
Part No. 41060.0210.C11A000 - Operating voltage 110V, AC (50Hz)
Part No. 41060.0210.C23A000 - Operating voltage 230V, AC (50Hz)
Part No. 41060.0210.C24D000 - Operating voltage 24V, DC
Part No. 41060.0210.C48D000 - Operating voltage 48V, DC

for actuators type 27514
Part No. 41060.0220.C24A000 - Operating voltage 24V, AC (50Hz)
Part No. 41060.0220.C11A000 - Operating voltage 110V, AC (50Hz)
Part No. 41060.0220.C23A000 - Operating voltage 230V, AC (50Hz)
Part No. 41060.0220.C24D000 - Operating voltage 24V, DC
Part No. 41060.0220.C48D000 - Operating voltage 48V, DC

for actuators type 27515
Part No. 41060.0230.C24A000 - Operating voltage 24V, AC (50Hz)
Part No. 41060.0230.C11A000 - Operating voltage 110V, AC (50Hz)
Part No. 41060.0230.C23A000 - Operating voltage 230V, AC (50Hz)
Part No. 41060.0230.C24D000 - Operating voltage 24V, DC
Part No. 41060.0230.C48D000 - Operating voltage 48V, DC

Version with EPDM sealing
port connections G (BSPP) 1/4 female thread, for oil- / degrease-free medium
Medium temperature: -30°C / -22°F up to +90°C / 194°F
Ambient temperature: -30°C / -22°F up to max. +55°C / 131°F

for actuators type 27511 and 27521
Part No. 41060.0200.C23A00E - Operating voltage 230V, AC (50Hz)
Part No. 41060.0200.C24D00E - Operating voltage 24V, DC

for actuators type 27512 and 27522
Part No. 41060.0210.C23A00E - Operating voltage 230V, AC (50Hz)
Part No. 41060.0210.C24D00E - Operating voltage 24V, DC

for actuators type 27514
Part No. 41060.0220.C23A00E - Operating voltage 230V, AC (50Hz)
Part No. 41060.0220.C24D00E - Operating voltage 24V, DC

for actuators type 27515
Part No. 41060.0230.C23A00E - Operating voltage 230V, AC (50Hz)
Part No. 41060.0230.C24D00E - Operating voltage 24V, DC

Available options - on request only:
· other port connections (1/4"NPT, G1/8), body and seat material 1.4401
· circuit functions: power free - outlet pressure loaded

Accessories for Actuated Valves

Type 41060 - Solenoid Valve, suitable for oxygen

3/2 way Solenoid Valve, including fixing accessories

direct acting solenoid valve DN3, fast acting, body in brass, protecting class IP65, with cable plug for cable-Ø7 mm, circuit function: power free - outlet balanced, Pressure range 0 - 10.0 bar, Voltage tolerance ±10%, with flat seal and fixing screw

Version with FKM sealing, cleaned and degreased, suitable for oxygen
port connections G (BSPP) 1/4 female thread, for neutral medium like air and water
Medium temperature: 0°C / 32°F up to +90°C / 194°F
Ambient temperature: 0°C / 32°F up to max. +55°C / 131°F

Standard version

for actuators type 27511 and 27521
Part No. 41060.0200.C24AO2F - Operating voltage 24V, AC (50Hz)
Part No. 41060.0200.C23AO2F - Operating voltage 230V, AC (50Hz)
Part No. 41060.0200.C24DO2F - Operating voltage 24V, DC

for actuators type 27512 and 27522
Part No. 41060.0210.C24AO2F - Operating voltage 24V, AC (50Hz)
Part No. 41060.0210.C23AO2F - Operating voltage 230V, AC (50Hz)
Part No. 41060.0210.C24DO2F - Operating voltage 24V, DC

for actuators type 27514
Part No. 41060.0220.C24AO2F - Operating voltage 24V, AC (50Hz)
Part No. 41060.0220.C23AO2F - Operating voltage 230V, AC (50Hz)
Part No. 41060.0220.C24DO2F - Operating voltage 24V, DC

for actuators type 27515
Part No. 41060.0230.C24AO2F - Operating voltage 24V, AC (50Hz)
Part No. 41060.0230.C23AO2F - Operating voltage 230V, AC (50Hz)
Part No. 41060.0230.C24DO2F - Operating voltage 24V, DC

Available options - on request only:
· other port connections (1/4"NPT, G1/8)
· circuit functions: power free - outlet pressure loaded

Accessories for Actuated Valves

Type 40061 - Solenoid Valve EEx

3/2 way Solenoid Valve, EEx-protected

direct acting solenoid valve DN3, fast acting, body in brass, protecting class IP65,
EPS 16 ATEX 1 111X; II 2 G Ex mb IIC T 4 Gb; II 2 D EX mb IIIC T130° Db
with cable 3 x 0,5 mm^2, circuit function: power free - outlet balanced,
Pressure range 0 - 10.0 bar, Voltage tolerance ±10%, semi time-lag fuse acc. to nominal voltage

UC = universal current (universal control voltage)
Port connection 1/4" G (BSPP) thread: X= 0
Port connection 1/4" NPT thread: X= 6

EEx-protected version

Version with NBR sealing
port connections G (BSPP) 1/4 female thread, for neutral medium like air and water
Medium temperature: 0°C / 32°F up to +80°C / 176°F
Ambient temperature: 0°C / 32°F up to max. +55°C / 131°F

Part No. 400611020X.C024030 - Operating voltage 24V, UC, with 3 meter cable
Part No. 400611020X.C024100 - Operating voltage 24V, UC, with 10 meter cable
Part No. 400611020X.C230030 - Operating voltage 230V, UC, with 3 meter cable
Part No. 400611020X.C11A030 - Operating voltage 110V, AC (50 Hz), with 3 meter cable

Available options - on request only:
· other port connections (G1/8), body and seat material 1.4401
· circuit functions: power free - outlet pressure loaded

Accessories for Actuated Valves
Type 41061 - Solenoid Valve EEx

3/2 way Solenoid Valve, EEx-protected, including fixing accessories

direct acting solenoid valve DN3, fast acting, body in brass, protecting class IP65,
EPS 16 ATEX 1 111X; II 2 G Ex mb IIC T 4 Gb; II 2 D EX mb IIIC T130° Db
with cable 3 x 0,5 mm^2 - cable 3 meter long, circuit function: power free - outlet balanced,
Pressure range 0 - 10.0 bar, Voltage tolerance ±10%, semi time-lag fuse acc. to nominal voltage

Version with NBR sealing
port connections G (BSPP) 1/4 female thread, for neutral medium like air and water
Medium temperature: 0°C / 32°F up to +80°C / 176°F
Ambient temperature: 0°C / 32°F up to max. +55°C / 131°F

EEx-protected version

for actuators type 27511
Part No. 4106110200.C024030 - Operating voltage 24V, UC, with 3 meter cable
Part No. 4106110200.C024100 - Operating voltage 24V, UC, with 10 meter cable
Part No. 4106110200.C230030 - Operating voltage 230V, UC, with 3 meter cable

for actuators type 27512
Part No. 4106110210.C024030 - Operating voltage 24V, UC, with 3 meter cable
Part No. 4106110210.C024100 - Operating voltage 24V, UC, with 10 meter cable
Part No. 4106110210.C230030 - Operating voltage 230V, UC, with 3 meter cable

for actuators type 27514
Part No. 4106110220.C024030 - Operating voltage 24V, UC, with 3 meter cable
Part No. 4106110220.C024100 - Operating voltage 24V, UC, with 10 meter cable
Part No. 4106110220.C230030 - Operating voltage 230V, UC, with 3 meter cable

for actuators type 27515
Part No. 4106110230.C024030 - Operating voltage 24V, UC, with 3 meter cable
Part No. 4106110230.C024100 - Operating voltage 24V, UC, with 10 meter cable
Part No. 4106110230.C230030 - Operating voltage 230V, UC, with 3 meter cable

port connections 1/4" NPT female thread, for neutral medium like air and water
Medium temperature: 0°C / 32°F up to +80°C / 158°F
Ambient temperature: 0°C / 32°F up to max. +55°C / 131°F

for actuators type 27511
Part No. 4106110206.C024030 - Operating voltage 24V, UC, with 3 meter cable
Part No. 4106110206.C11A030 - Operating voltage 110V, AC (50 Hz), with 3 meter cable

for actuators type 27512
Part No. 4106110216.C024030 - Operating voltage 24V, UC, with 3 meter cable
Part No. 4106110216.C11A030 - Operating voltage 110V, AC (50 Hz), with 3 meter cable

for actuators type 27514
Part No. 4106110226.C024030 - Operating voltage 24V, UC, with 3 meter cable
Part No. 4106110226.C11A030 - Operating voltage 110V, AC (50 Hz), with 3 meter cable

for actuators type 27515
Part No. 4106110236.C024030 - Operating voltage 24V, UC, with 3 meter cable
Part No. 4106110236.C11A030 - Operating voltage 110V, AC (50 Hz), with 3 meter cable

UC = DC and AC

Available options - on request only:
· other port connections (G1/8), body and seat material 1.4401
· circuit functions: power free - outlet pressure loaded

Type 40070, Type 40071 - Position and Limit Switches

Position and Limit Switches
Limit switch (0/100%) with parallel roller lever and fixing device, quick-break switch,
Max. fuse rating 6A gL/gD D-fuse, Switching fequency 3600/h

Standard version
Protection class IP65 acc. to EN 60529,
Rated operating current/-voltage Ie/Ue: 6A / 400VAC,
3 cable entries M16 x 1.5,
change-over contact with double break (1 break contact/ 1 make contact),
Ambient temperature -20°C / -4°F up tp +80°C / 176°F

Part No. 40070.0011.0100100

Standard version

Position and Limit Switches
Limit switch (0/100%) with parallel roller lever and fixing device, quick-break switch,
Max. fuse rating 5A gG/gN-fuse, Switching fequency 1800/h

EEx-protected version

EEx-protected version
Protection class IP65 acc. to EN 60529, EEX d IIC T6,
Rated operating current/-voltage Ie/Ue: 5A / 250VAC,
with cable 4 x 0,75 mm^2
change-over contact with single break (1 break contact/ 1 make contact),
Ambient temperature -20°C / -4°F up tp +60°C / 140°F

Part No. 40071.0012.1322000 - with 3 meter cable
Part No. 40071.0012.1325000 - with 10 meter cable

Available options - on request only:
· overrun limit switch to signal intermediate positions
· other cable length

Accessories for Actuated Valves

Type 41070, Type 41071 - Position and Limit Switches

Position and Limit Switches, including fixing device
Limit switch (0/100%) with parallel roller lever and fixing device, quick-break switch,
Max. fuse rating 6A gL/gD D-fuse, Switching fequency 3600/h

Standard version
for actuators type 27511, 27512, 27521 and 27522
Part No. 41070.0011.0100100
Protection class IP65 acc. to EN 60529,
Rated operating current/-voltage Ie/Ue: 6A / 400VAC,
3 cable entries M16 x 1.5,
change-over contact with double break (1 break contact/ 1 make contact),
Ambient temperature -20°C / -4°F up tp +80°C / 176°F

for actuators type 27514 and 27515
Part No. 41370.0011.0100100
Protection class IP65 acc. to EN 60529,
Rated operating current/-voltage Ie/Ue: 6A / 400VAC,
3 cable entries M16 x 1.5,
change-over contact with double break (1 break contact/ 1 make contact),
Ambient temperature -20°C / -4°F up tp +80°C / 176°F

Standard version

Position and Limit Switches
Limit switch (0/100%) with parallel roller lever and fixing device, quick-break switch,
Max. fuse rating 5A gG/gN-fuse, Switching fequency 1800/h

EEx-protected version
for actuators type 27511, 27512, 27521 and 27522
Part No. 41071.0012.1322000
Protection class IP65 acc. to EN 60529, EEX d IIC T6,
Rated operating current/-voltage Ie/Ue: 5A / 250VAC,
with cable 4 x 0,75 mm^2 - cable 3 meter long,
change-over contact with single break (1 break contact/ 1 make contact),
Ambient temperature -20°C / -4°F up tp +60°C / 140°F

for actuators type 27514 and 27515
Part No. 41371.0012.1322000
Protection class IP65 acc. to EN 60529, EEX d IIC T6,
Rated operating current/-voltage Ie/Ue: 5A / 250VAC,
with cable 4 x 0,75 mm^2 - cable 3 meter long,
change-over contact with single break (1 break contact/ 1 make contact),
Ambient temperature -20°C / -4°F up tp +60°C / 140°F

EEx-protected version

Available options - on request only:
· overrun limit switch to signal intermediate positions
· other cable length

Accessories for Actuated Valves

Type 40080 - Inductive Proximity Switches

Inductive proximity switches
Functions: inductive, Switching element function NAMUR NC, Output polarity NAMUR,
Rated operating distance 2 mm, Assured operating distance 0 - 1.62 mm, Installation embeddable,
Nominal voltage 8.2V, Switch frequency 0 - 1000 Hz, Short-circuit and reverse polarity protection,
Protecting class IP66/ IP67 acc. to EN 60529, EEX ia IIC T6
Indication of the switching state all direction LED yellow, with cable 2m x 0.34 mm^2
Ambient temperature: -25°C / -13°F up to +70°C / 158°F

Part No. 4008011235.0A20100 - with 2 meter cable
Part No. 4008011235.0A20400 - with 10 meter cable

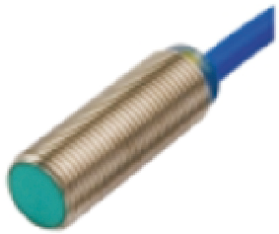

Functions: inductive, Switching element function PNP closer, Output polarity DC,
Rated operating distance 2 mm, Assured operating distance 0 - 1.62 mm, Installation embeddable,
Nominal voltage 10 - 60V, Switch frequency 0 - 3000 Hz, Short-circuit and reverse polarity protection,
Protecting class IP66/ IP67 acc. to EN 60529
Indication of the switching state all direction LED yellow, with appliance inlet M12 x 1 - 4 pole
Ambient temperature: -25°C / -13°F up to +70°C / 158°F

Part No. 4008011240.0B10100 - with 2 meter cable

Induktive sensor: NCB2-12GM40-Z0
Functions: inductive, Switching element function DC closer, Output polarity DC,
Rated operating distance 2 mm, Assured operating distance 0 - 1.62 mm, Installation embeddable,
Nominal voltage 5 - 60V, Switch frequency 0 - 800 Hz, Short-circuit clocking,
Protecting class IP66/ IP67 acc. to EN 60529
Indication of the switching state all direction LED yellow, with cable 2m x 0.14 mm^2
Ambient temperature: -25°C / -13°F up to +70°C / 158°F

Part No. 4008011240.0C10100 - with 2 meter cable

Available options - on request only:
· Other cable length
· Adapter for manual operated valves

Accessories for Actuated Valves
Type 41080 - Inductive Proximity Switches

Inductive proximity switches, including fixing device

Functions: inductive, Switching element function NAMUR NC, Output polarity NAMUR,
Rated operating distance 2 mm, Assured operating distance 0 - 1.62 mm, Installation embeddable,
Nominal voltage 8.2V, Switch frequency 0 - 1000 Hz, Short-circuit and reverse polarity protection,
Protecting class IP66/ IP67 acc. to EN 60529, EEX ia IIC T6
Indication of the switching state all direction LED yellow, with cable 2m x 0.34 mm^2
Ambient temperature: -25°C / -13°F up to +70°C / 158°F

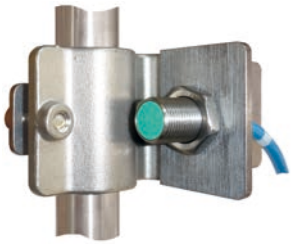

for actuators type 27511, 27512, 27521 and 27522
Part No. 41080.1235.AA20100 (Valve size DN10 - DN150), with 2 meter cable
Part No. 41080.1235.AA20400 (Valve size DN10 - DN150), with 10 meter cable

for actuators type 27514 and 27515
Part No. 41080.1235.BA20100 (Valve size DN10 - DN50), with 2 meter cable
Part No. 41080.1235.BA20400 (Valve size DN10 - DN50), with 10 meter cable

Part No. 41080.1235.CA20100 (Valve size DN65), with 2 meter cable
Part No. 41080.1235.CA20400 (Valve size DN65), with 10 meter cable

Part No. 41080.1235.DA20100 (Valve size DN80 - DN100), with 2 meter cable
Part No. 41080.1235.DA20400 (Valve size DN80 - DN100), with 10 meter cable

Part No. 41080.1235.EA20100 (Valve size DN150), with 2 meter cable
Part No. 41080.1235.EA20400 (Valve size DN150), with 10 meter cable

Functions: inductive, Switching element function PNP closer, Output polarity DC,
Rated operating distance 2 mm, Assured operating distance 0 - 1.62 mm, Installation embeddable,
Nominal voltage 10 - 60V, Switch frequency 0 - 3000 Hz, Short-circuit and reverse polarity protection,
Protecting class IP66/ IP67 acc. to EN 60529
Indication of the switching state all direction LED yellow, with appliance inlet M12 x 1 - 4 pole
Ambient temperature: -25°C / -13°F up to +70°C / 158°F

for actuators type 27511, 27512, 27521 and 27522
Part No. 4108011240.AB10100 (Valve size DN10 - DN150)

for actuators type 27514 and 27515
Part No. 4108011240.BB10100 (Valve size DN10 - DN50)
Part No. 4108011240.CB10100 (Valve size DN65)
Part No. 4108011240.DB10100 (Valve size DN80 - DN100)
Part No. 4108011240.EB10100 (Valve size DN150)

Induktive sensor: NCB2-12GM40-Z0
Functions: inductive, Switching element function DC closer, Output polarity DC,
Rated operating distance 2 mm, Assured operating distance 0 - 1.62 mm, Installation embeddable,
Nominal voltage 5 - 60V, Switch frequency 0 - 800 Hz, Short-circuit clocking,
Protecting class IP66/ IP67 acc. to EN 60529
Indication of the switching state all direction LED yellow, with cable 2m x 0.14 mm^2 - 2 meter long
Ambient temperature: -25°C / -13°F up to +70°C / 158°F

for actuators type 27511, 27512, 27521 and 27522
Part No. 41080.1240.AC10100 (Valve size DN10 - DN150)

for actuators type 27514 and 27515
Part No. 41080.1240.BC10100 (Valve size DN10 - DN50)
Part No. 41080.1240.CC10100 (Valve size DN65)
Part No. 41080.1240.DC10100 (Valve size DN80 - DN100)
Part No. 41080.1240.EC10100 (Valve size DN150)

Available options - on request only:
· other cable length

Accessories for Actuated Valves

Type 08002 - Air Control Sets

Air Control sets
Diaphragmn pressure regulator with secondary ventilation,
Installation position vertical - drain plug at bottom,
Inlet pressure maximal 16.0 bar,
filter element in Polyethylen (sinterted), pore diameter in filter element 5µm,
port connections G1/4, body zinc-diecasting, with NBR seal,
tank capacity maximal 0.35 cm^3 condensate, condensate draining manuel,
Ambient temperature: -10°C / 14°F up to +60°C / 140°F,
including pressure gauge (0 - 10.0 bar)

Part No. 08002.021K.0000
condensate tank Polycarbonat, control range 0.5 - 10.0 bar

Part No. 08002.021M.0000
condensate tank in metal, control range 0,5 - 16.0 bar

Adapter 1/4" NPT female thread - G1/4 male thread

Part No. 29001.0004.0302
material brass (CW614N / ASTM B 283 UNS C38500)

Part No. 29001.0004.0783
material stainless steel (1.4404 / ASTM 316L))

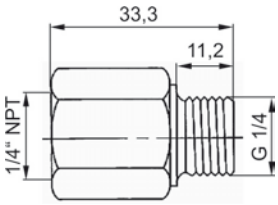

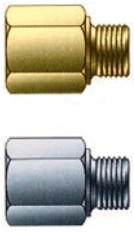

Accessories for Actuated Valves
Type 08003 - Air Control Sets

Air Control sets, including fixing accessories
Diaphragmn pressure regulator with secondary ventilation,
Installation position vertical - drain plug at bottom,
Inlet pressure maximal 16.0 bar,
filter element in Polyethylen (sinterted), pore diameter in filter element 5µm,
port connections G1/4, body zinc-diecasting, with NBR seal,
tank capacity maximal 0.35 cm^3 condensate, condensate draining manuel,
Ambient temperature: -10°C / 14°F up to +60°C / 140°F,
including pressure gauge (0 - 10.0 bar)

Part No. 08003.021K.0000
condensate tank Polycarbonat, control range 0.5 - 10.0 bar

Part No. 08003.021M.0000
condensate tank in metal, control range 0,5 - 16.0 bar

High Flow Filter Regulator in stainless steel, including fixing accessories
Installation position vertical - drain plug at bottom,
Inlet pressure maximal 20.0 bar, control range 0.5 - 10.0 bar
filter element in stainless steel (AISI 316), pore diameter in filter element 5µm,
body in stainless steel (AISI 316L), with FPM seal,
condensate draining manuel,
Medium temperature: -60°C / -76°F up to +90°C / 194°F,
Ambient temperature: -60°C / -76°F up to +90°C / 194°F,
including pressure gauge (0 - 10.0 bar)
Approvals: ATEX Zone 1 and 21, SIL2, CU-TR, NACE

Part No. 08003.0200.0F02
port connections G1/4 female thread

Part No. 08003.0206.0F02
port connections 1/4" NPT female thread

Part No. 30803.0200.0F02
Filter (5µm) and O-ring spare part kit for low temperature applications

Adapter 1/4" NPT female thread - G1/4 male thread

Part No. 29001.0004.0302
material brass (CW614N / ASTM B 283 UNS C38500)

Part No. 29001.0004.0783
material stainless steel (1.4404 / ASTM 316L))

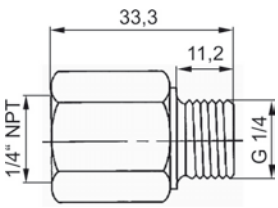

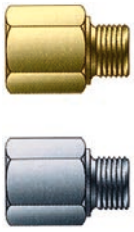

Type 40090 - Electropneumatic Positioner

Electropneumatic positioner for pneumatic Actuator
ATTENTION - operate only with dry, oil-free air acc. to IEC654-2 !
Protecting class IP66 acc. to EN 60529,
Operation: simple, Inlet air pressure: max. 6.0 bar - connection with female thread G1/4
Electrical connection: screw type terminals 2.5 mm^2, cable gland: M 20 x 1.5

Set point x:
4 - 20 mA with 2 conductor connections
0/4 - 20 mA with 3/4 conductor connections
Auxiliary power with 3/4 conductor connections: UH: 18-30V DC

Internal resistance:
Ri = 500 Ohm (2-wire)
Ri = 50 Ohm (3/4-wire)

Ambient temperature: -30°C / -22°F up to +80°C / 176°F

Part No. 40090.6136.00DA000
standard version (3/4-wire)
Part No. 40090.6136.00DA010
with installed limit indicator, incl. 2nd cable fitting, alarm module; electronic (6DR4004-8A), (3/4-wire)
Part No. 40090.6136.00DA020
with IY-module: 4...20 mA check-back signal (3/4-wire)
Part No. 40090.6136.00EA000
with Profibus PA connection
Part No. 40090.6136.00FA000
with foundation fieldbus and fixable friction clutch
Part No. 40090.6136.00BA100
with HART connection (2-wire)

Type 41090 - Electropneumatic Positioner

Electropneumatic positioner for pneumatic Actuator
ATTENTION - operate only with dry, oil-free air acc. to IEC654-2 !
Protecting class IP66 acc. to EN 60529,
Operation: simple, Inlet air pressure: max. 6.0 bar - connection with female thread G1/4
Electrical connection: screw type terminals 2.5 mm^2, cable gland: M 20 x 1.5

Set point x:
4 - 20 mA with 2 conductor connections
0/4 - 20 mA with 3/4 conductor connections
Auxiliary power with 3/4 conductor connections: UH: 18-30V DC

Internal resistance:
Ri = 500 Ohm (2-wire)
Ri = 50 Ohm (3/4-wire)

Ambient temperature: -30°C / -22°F up to +80°C / 176°F

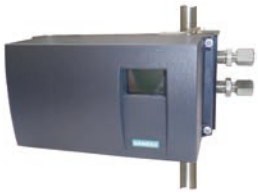

inclusive fixing device for actuators with lift up to 35.0 mm

for actuators type 27511, 27514 and 27521 (spring to close)
Part No. 41090.6136.00DA000
standard version (3/4-wire)
Part No. 41090.6136.00DA010
with installed limit indicator, incl. 2nd cable fitting, alarm module; electronic (6DR4004-8A), (3/4-wire)
Part No. 41090.6136.00DA020
with IY-module: 4...20 mA check-back signal (3/4-wire)
Part No. 41090.6136.00EA000
with Profibus PA connection
Part No. 41090.6136.00FA000
with foundation fieldbus and fixable friction clutch
Part No. 41090.6136.00BA100
with HART connection (2-wire)

for actuators type 27512, 27515 and 27522 (spring to open)
Part No. 41090.6136.01DA000
standard version (3/4-wire)
Part No. 41090.6136.01DA010
with installed limit indicator, incl. 2nd cable fitting, alarm module; electronic (6DR4004-8A), (3/4-wire)
Part No. 41090.6136.01DA020
with IY-module: 4...20 mA check-back signal (3/4-wire)
Part No. 41090.6136.01EA000
with Profibus PA connection
Part No. 41090.6136.01FA000
with foundation fieldbus and fixable friction clutch
Part No. 41090.6136.01BA100
with HART connection (2-wire)

inclusive fixing device for actuators with lift from 35.0 mm up to 130.0 mm

for actuators type Typ 27511, 27512, 27514, 27515, 27521 and 27522
Part No. 41090.6136.12DA000
standard version (3/4-wire)
Part No. 41090.6136.12DA010
with installed limit indicator, incl. 2nd cable fitting, alarm module; electronic (6DR4004-8A), (3/4-wire)
Part No. 41090.6136.12DA020
with IY-module: 4...20 mA check-back signal (3/4-wire)
Part No. 41090.6136.12EA000
with Profibus PA connection
Part No. 41090.6136.12FA000
with foundation fieldbus and fixable friction clutch
Part No. 41090.6136.12BA100
with HART connection (2-wire)

Type 40091 - Electropneumatic Positioner EEx

Electropneumatic positioner for pneumatic Actuator
ATTENTION - operate only with dry, oil-free air acc. to IEC654-2 !
Protecting class IP66 acc. to EN 60529, with EEx-protection: II 2 G EEx ia IIC T6
Operation: simple, Inlet air pressure: max. 6.0 bar - connection with female thread G1/4
Electrical connection: screw type terminals 2.5 mm^2, cable gland: M 20 x 1.5

Set point x:
4 - 20 mA with 2 conductor connections

Internal resistance:
Ri = 500 Ohm (2-wire)

Ambient temperature: -30°C / -22°F up to +50°C / 122°F

Part No. 40091.6136.00AA000
standard version - 2 wire connection
Part No. 40091.6136.00AA020
with IY-module: 4...20 mA check-back signal (2-wire)
Part No. 40091.6136.00EA000
with Profibus PA connection

Type 41091 - Electropneumatic Positioner EEx

Electropneumatic positioner for pneumatic Actuator
ATTENTION - operate only with dry, oil-free air acc. to IEC654-2 !
Protecting class IP66 acc. to EN 60529, with EEx-protection: II 2 G EEx ia IIC T6
Operation: simple, Inlet air pressure: max. 6.0 bar - connection with female thread G1/4
Electrical connection: screw type terminals 2.5 mm^2, cable gland: M 20 x 1.5

Set point x:
4 - 20 mA with 2 conductor connections

Internal resistance:
Ri = 500 Ohm (2-wire)

Ambient temperature: -30°C / -22°F up to +50°C / 122°F

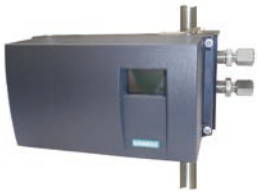

inclusive fixing device for actuators with lift up to 35.0 mm

for actuators type 27511, 27514 and 27521 (spring to close)
Part No. 41091.6136.00AA000
standard version - 2 wire connection
Part No. 41091.6136.00AA020
with IY-module: 4...20 mA check-back signal (2-wire)
Part No. 41091.6136.00EA000
with Profibus PA connection

for actuators type 27512, 27515 and 27522 (Feder öffnet)
Part No. 41091.6136.01AA000
standard version - 2 wire connection
Part No. 41091.6136.01AA020
with IY-module: 4...20 mA check-back signal (2-wire)
Part No. 41091.6136.01EA000
with Profibus PA connection

inclusive fixing device for actuators with lift from 35.0 mm up to 130.0 mm

for actuators type 27511, 27512, 27514, 27515, 27521 and 27522
Part No. 41091.6136.12AA000
standard version - 2 wire connection
Part No. 41091.6136.12AA020
with IY-module: 4...20 mA check-back signal (2-wire)
Part No. 41091.6136.12EA000
with Profibus PA connection

Type 40090 - Pneumatic Positioner

Pneumatic positioner for pneumatic Actuator
ATTENTION - operate only with dry, oil-free air acc. to IEC654-2 !
Protecting class IP54 acc. to EN 60529,

Part No. 40090.0981.00NB200
Operation: simple, Inlet air pressure: max. 6.0 bar
Independent adjustment of stroke range and zero,
Signal range 0.2 - 1.0 bar or split range down to Δw 0.2 bar,
adjustable amplification and damping,
Ambient temperature: -40°C / -40°F up to +80°C / 176°F

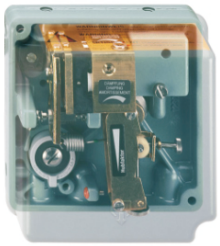

Accessories for Actuated Valves

Type 41090 - Pneumatic Positioner

Pneumatic positioner for pneumatic Actuator, including fixing device
ATTENTION - operate only with dry, oil-free air acc. to IEC654-2 !
Protecting class IP54 acc. to EN 60529,

Part No. 41090.0981.22NB200
Operation: simple, Inlet air pressure: max. 6.0 bar - connection with female thread G1/8
Independent adjustment of stroke range and zero,
Signal range 0.2 - 1.0 bar or split range down to Δw 0.2 bar,
adjustable amplification and damping,
Ambient temperature: -40°C / -40°F up to +80°C / 176°F

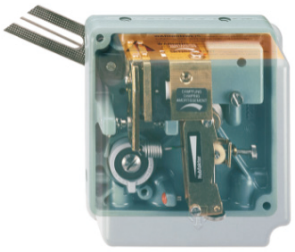

Type 40281 - Inductive Proximity Switches EEx-Box

Inductive Proximity Switches - EEx-protected

Functions: inductive, Switching element function NAMUR Opener, Output polarity NAMUR,
Rated operating distance 2mm, Nominal voltage 8.2V, Switch frequency 0 - 2000Hz,
until SIL3 acc. to IEC 61508 suitable, protecting class IP68 acc. to EN 60529, EEX ia IIC T6
Bracket, shaft and screws made of stainless steel SS316
Working temperature: -40°C / -40°F (233K) up to +80°C/ +176°F (353K)

Part No. 40281.1114.0A300A0
with cable gland M20 Eexi, made of plastic, WAGO terminal block
with universal limit switch box ATEX EexiaIICT6 made of plastic IP67
with 2 x switches (NJ2-12GK-SN)

Part No. 40281.1114.0A500A0
with 2 cable glands M20 Eexi, made of plastic, WAGO terminal block
with universal limit switch box ATEX EexiaIICT6 made of plastic IP67
with 2 x switches (NJ2-12GK-SN)

Special equipment with limit switch box made of aluminium

Part No. 40281.1230.0A300B0
with cable gland M20 Eexi, made of plastic, WAGO terminal block
with universal limit switch box ATEX EexiaIICT6 made of aluminium IP67
with 2 x switches (NJ2-12GK-SN)

Part No. 40281.1230.0A600B0
with cable gland 1/2" Eexi NPT, made of plastic, WAGO terminal block
with universal limit switch box ATEX EexiaIICT6 made of aluminium IP67
with 2 x switches (NJ2-12GK-SN)

Type 41281 - Inductive Proximity Switches EEx-Box

Inductive Proximity Switches - EEx-protected, including fixing device

Functions: inductive, Switching element function NAMUR Opener, Output polarity NAMUR,
Rated operating distance 2mm, Nominal voltage 8.2V, Switch frequency 0 - 2000Hz,
until SIL3 acc. to IEC 61508 suitable, protecting class IP68 acc. to EN 60529, EEX ia IIC T6
Bracket, shaft and screws made of stainless steel SS316
Working temperature: -40°C / -40°F (233K) up to +80°C/ +176°F (353K)

Part No. 41281.1114.FA300A0
with cable gland M20 Eexi, made of plastic, WAGO terminal block
with universal limit switch box ATEX EexiaIICT6 made of plastic IP67
with 2 x switches (NJ2-12GK-SN)
including bracket for pneumatic actuator DN10 - DN150

Part No. 41281.1114.FA500A0
with 2 cable glands M20 Eexi, made of plastic, WAGO terminal block
with universal limit switch box ATEX EexiaIICT6 made of plastic IP67
with 2 x switches (NJ2-12GK-SN)
including bracket for pneumatic actuator DN10 - DN150

Part No. 41281.1114.GA300A0
with cable gland M20 Eexi, made of plastic, WAGO terminal block
with universal limit switch box ATEX EexiaIICT6 made of plastic IP67
with 2 x switches (NJ2-12GK-SN)
including bracket for Firestoneactuator (rubber bellow) for stroke up to 40mm

Special equipment with limit switch box made of aluminium

Part No. 41281.1230.FA300B0
with cable gland M20 Eexi, made of plastic, WAGO terminal block
with universal limit switch box ATEX EexiaIICT6 made of aluminium IP67
with 2 x switches (NJ2-12GK-SN)
including bracket for pneumatic actuator DN10 - DN150

Part No. 41281.1230.FA600B0
with cable gland 1/2" Eexi NPT, made of plastic, WAGO terminal block
with universal limit switch box ATEX EexiaIICT6 made of aluminium IP67
with 2 x switches (NJ2-12GK-SN)
including bracket for pneumatic actuator DN10 - DN150

Accessories for Actuated Valves

Type 55177 - Weather protection hood

Weather protection hood
to protect valves against weather-related damage
suitable for valves with rubber actuators (DN15-DN80)

Part No. 55177.0107.0767
suitable for the following types of valves:
- 01353, 01653, 01753, 01853
- 09343, 09443

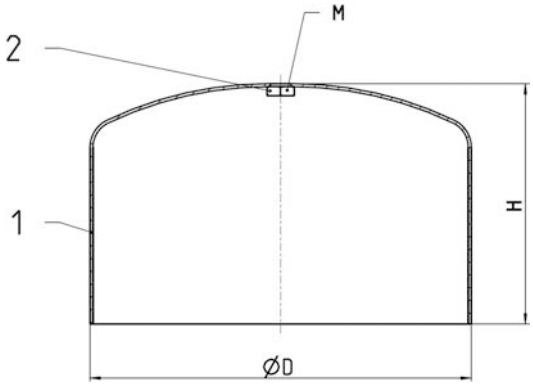

Materials		DIN EN	ASTM
1	Hood	1.4571	316Ti
2	Nut	1.4301	8

Type 55177	Technical Data	
Part No.		**55177.0107.0767**
Thread	M	M12
Height	H	160
Diameter	D	254
Weight	ca. kg	2,5

Dimensions in mm.

Edition 2022-11

Accessories for Actuated Valves

Type 55287 - Pipe fittings

Pipe fitting for pneumatic actuators

Pipe fitting in 1.4571/ A 313 Grade 316Ti

Part No. 55287.0008.0767 + 55287.0025.0767
straight pipe fitting + angle pipe fitting, suitable for actuators of type:
27514.DP30.2O22 27514.DP33.3O20 27515.DP33.3S02
27514.DP32.2O20 27515.DP30.2S06
27514.DP32.2O08 27515.DP32.3S02

Dimensions in mm					
G	D	A	L	S	B
R 1/4"	8	48	29	17	12

Part No. 55287.0020.0767 + 55287.0025.0767
straight pipe fitting + angle pipe fitting, suitable for actuators of type:
27514.DP34.5O15 27514.DP34.T0PO (Tandem - Actuator)
27514.DP34.5O20 27515.DP34.5S02

Dimensions in mm					
G	D	A	L	S	B
R 3/8"	8	48	29	17	12

Part No. 55287.0004.0767 + 55287.0025.0767
straight pipe fitting + angle pipe fitting, suitable for actuators of type:
27511.35B6.6GPO 27511.75B6.5DPO 27512.60A6.6GPS
27511.60A6.6GPO 27511.75B6.7DPO 27512.60C6.7GPS
27511.60C6.7GPO 27512.15A6.3SPS 27512.75B6.2SPS
27511.75B6.3DPO 27512.35B6.6GPS

Dimensions in mm					
G	D	A	L	S	B
NPT 1/4"	8	50	29	17	12

Part No. 55287.0021.0767 + 55287.0026.0767
straight pipe fitting + angle pipe fitting, suitable for actuators of type:
27514.DP34.TRP1 (DN200 Triple - Actuator)
27514.DP34.TRPO (Triple - Actuator)

Dimensions in mm					
G	D	A	L	S	B
G 1/2"	12	56	32	22	17

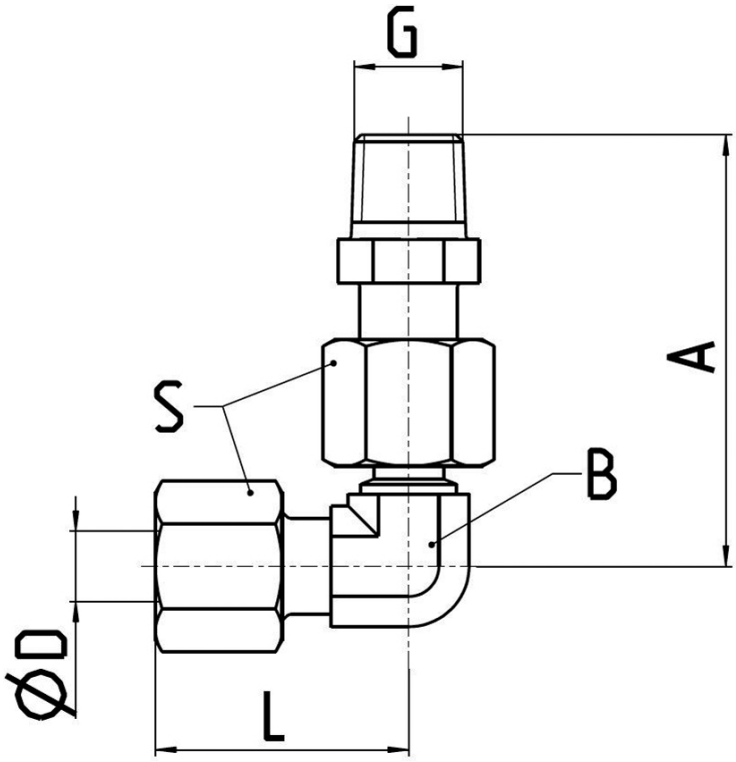

Accessories for Actuated Valves

Type 74394 - Bracket for accessories

Bracket for accessories
for Cryogenic-Gate Valves with Pneumatic Actuator

Part No. 74394.0005.0783
for Inductive Proximity Switches
and Position and Limit Switches
Stroke: 1.0 - 40.0mm
Globe valves until DN80
Gate valves until DN40

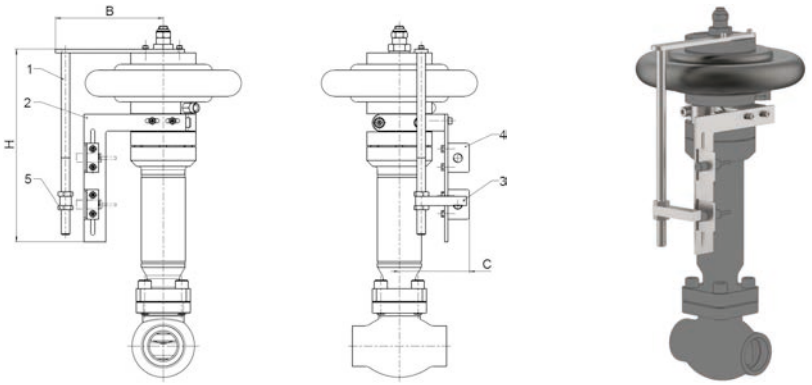

Part No. 74394.0008.0783
for Inductive Proximity Switches
and Position and Limit Switches
Stroke: 40.1 - 100.0mm
Globe valves from DN100
Gate valves from DN50

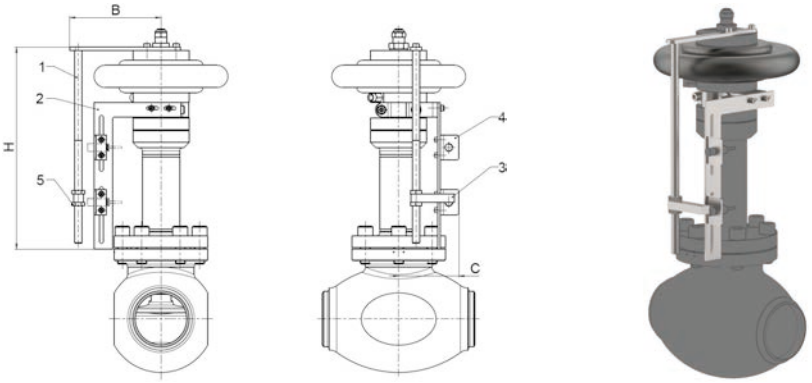

Part No. 74394.0010.0783
for Inductive Proximity Switches EEx-Box
Stroke: 1.0 - 40.0mm
Globe valves until DN80
Gate valves until DN40

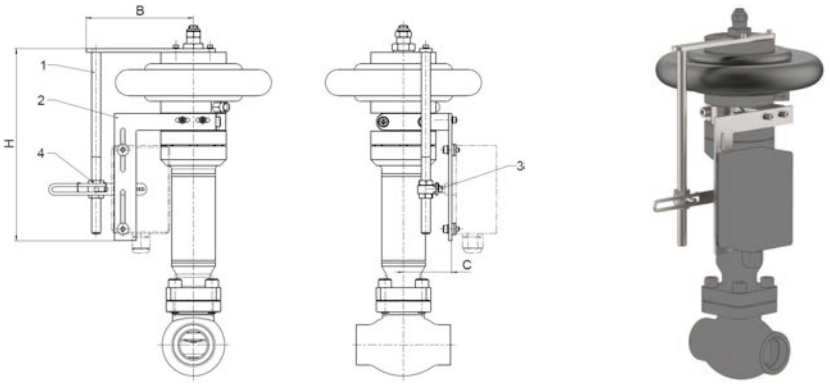

Materials		DIN EN	ASTM
1	Bracket	1.4404	A 276 Grade 316L
2	Angle	1.4404	A 276 Grade 316L
3	Stopper	1.4571/ 1.4404	A 276 Grade 316Ti/ A 276 Grade 316L
4	Bracket	1.4404	A 276 Grade 316L
5	Nut	1.4571/A4	A 194 Grade 8M

For use with the following accessories:
· Type 40070, 40071 - Position and Limit Switches
· Type 40080 - Inductive Proximity Switches
· Type 40281 - Inductive Proximity Switches EEx-Box

Type 74394	Technical Data			
Part Number		**74394.0005.0783**	**74394.0008.0783**	**74394.0010.0783**
Length	B	147.5	147.5	150.0
Height	H	266	326	265
Length	C	96.7	96.7	66.5
Weight	ca. kg	1.2	1.3	0.7

Dimensions in mm.

Edition 2022-11

Spare Parts for Actuated Valves

Type 29343 - Topwork with pneumatic actuator

for Cryogenic-Gate Valves with Pneumatic Actuator

air pressure for operation 4,0 bar g (maximal 10,0 bar g), push-in connection 8mm
Stainless steel topwork,
Actuator - air opens, spring closes
one way tightening (in flow direction),
" live loaded " gland packing
" cleaned and degreased for oxygen service " - the actuator is not cleaned and degreased for oxygen

Part No. 29343.X.T020

suitable for:

Type	Nominal size
09343	DN25 - DN100
09443	DN25 - DN65

Materials		DIN EN	ASTM
1	Valve seal	PTFE / Carbon filled (25%)	
2	Disc	CW452K	B 159 UNS C51900
3	Wedge	1.4308	A 351 CF8
4	Stem	1.4301	A 276 Grade 304
5	Bonnet gasket	PTFE	
6	Headpiece	1.4308	A 351 CF8
7	Bolts	1.4301/A2	A 194 B8
8	Elongation tube	1.4541	A 213 TP 321
9	Spring	1.4571	A 313 Grade 316Ti
10	Flange	1.4301	A 276 Grade 304
11	Headpiece	1.4301	A 276 Grade 304
12	Gland packing	Graphite / PTFE	
13	Gland nut	1.4305	A 276 Grade 303
14	Pillars	1.4301	A 276 Grade 304
15	Bush	CW452K	B 159 UNS C51900
16	Actuator	Rubber	

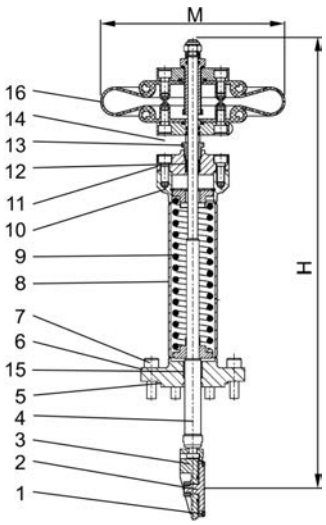

Type 29343.X.T020	Technical data						
Nominal size	**DN**	**25**	**40**	**50**	**65**	**80**	**100**
Dimension code	.X.	0250	0400	0500	0650	0800	1000
Height	H	500	520	540	560	580	780
Number of bolts		4	4	6	8	6	8
Handwheel-Ø	M	229	229	229	229	229	244
Weight	ca. kg	8.5	8.6	9.6	10.5	11.6	19.0

Dimensions in mm.

Spare Parts for Actuated Valves

Type 30003 - Spare part kit

for Rubber Pneumatic Actuator

" cleaned and degreased for oxygen service "

Part No. 30003.0000.T000

suitable for:

Type	Nominal size
01353	DN20 - DN80
01653	DN20 - DN80
01753	DN20 - DN80
01853	DN20 - DN80
09343	DN25 - DN100
09443	DN25 - DN65

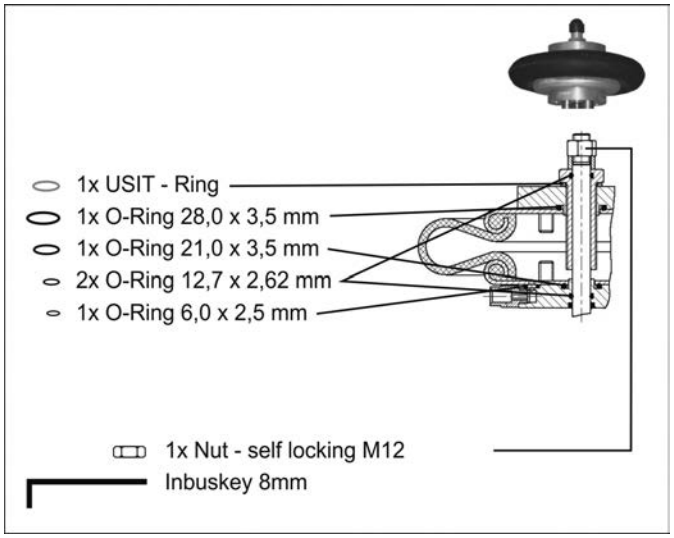

Type 30003.0000.T000	Technical data	
Nominal size	**DN**	**20 - 100**
Weight	ca. kg	0.25

Dimensions in mm.

Edition 2022-11

Pressure Regulator
Type 4182-1 - CombiPressure-Regulator

Cryogenic-Pressure Regulator, bronze, PN50

Set point range from 1.0 up to 38.0 bar
Connections: male thread for union connection, BSPP (G) or M thread
Cleaning Standard: "cleaned and degreased for oxygen service"
complete with installed strainer screens - mesh size 0.25 mm - on connection A and B

Part No. 4182-X-1100* Set point range 1.0 up to 12.0 bar
set at 8.0 bar unless otherwise noted on purchase order

Part No. 4182-X-1200* Set point range 6.0 up to 24.0 bar
set at 12.0 bar unless otherwise noted on purchase order

Part No. 4182-X-1300* Set point range 16.0 up to 38.0 bar
set at 20.0 bar unless otherwise noted on purchase order

*connection C: 1 = M thread (cone connection 37°), 2 = BSPP (G) thread (cone connection 60°)

Available options - on request only:
· Further connections
· With check unit type 66044

Applications:
Approved for air gases, vapours and cryogenic liquefied gases incl. LNG.
Working temperature: -196°C / -321°F (77K) up to +65°C / 149°F (338K)
Ambient temperature: -40°C / -40°F (233K) up to +65°C / 149°F (338K)

Materials		DIN EN	ASTM
1	Body	CC491K	C83600
2	Bonnet (cover)	CC491K	C83600
3	Diaphragm	1.4409	CF3M
4	Supporting ring	1.4301	304
5	Diaphragm ring	1.4301	304
6	Spring plate	1.4301	304
7	Spring	1.4310	313
8	Spring clamp	1.4301	304
9	Locking nut	1.4301	304
10	Set point adjuster	1.4301	304
11	Strainer (option)	CW452K	C51900
12	Valve seal	PTFE	
13	Bellow disc	CW614N	C38500
14	Bellow	1.4571	316Ti
15	Tubular overflow	CW614N	C38500
16	Connection fitting	CC491K	C83600

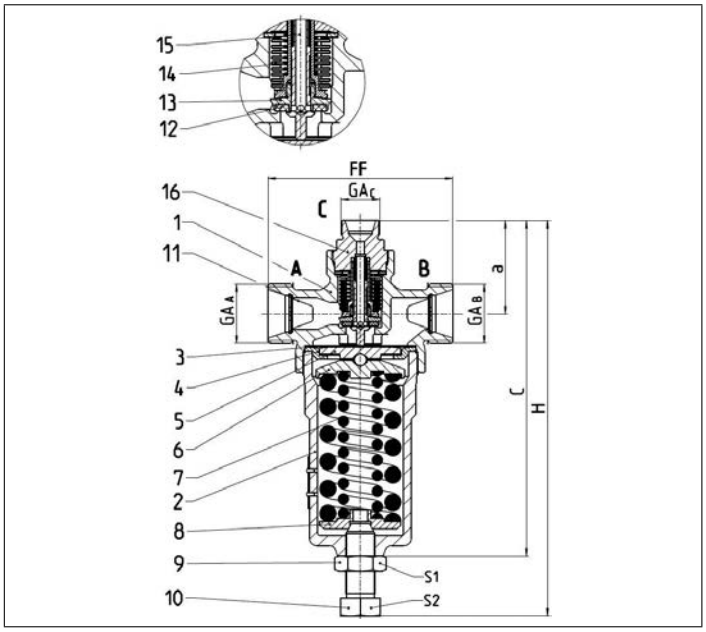

Type 4182	Technical data		
Nominal size	**DN**	**20**	**20**
Dimension code	.X.	MM04020	MG12000
Face-to-face dimension	FF	125	125
Height	H	268	268
Thread	GA_A	M40x2.0	G 1-1/4
Thread	GA_B	M40x2.0	G 1-1/4
Thread	GA_C	M26x1.5	G 3/4
Length	a	63	63
Length	c	227	227
Wrench size across flats	S_1	30	30
Wrench size across flats	S_2	27	27
Weight	ca. kg	4.7	4.7
Kvs-Value	m^3/h	1.5	1.5
Cv-Value	gal/min	1.7	1.7

Dimensions in mm.

Essential: Please confirm pressure range and valve set pressure on purchase order

Pressure Regulator
Type 4185-1 - CombiPressure-Regulator

Cryogenic-Pressure Regulator, brass, PN50

Set point range from 1.0 up to 38.0 bar
Connections: male thread for union connection, BSPP (G) or M thread
Cleaning Standard: "cleaned and degreased for oxygen service"
complete with installed strainer screens - mesh size 0.25 mm - on connection A and B

Part No. 4185-X-1100* Set point range 1.0 up to 12.0 bar
set at 8.0 bar unless otherwise noted on purchase order

Part No. 4185-X-1200* Set point range 6.0 up to 24.0 bar
set at 12.0 bar unless otherwise noted on purchase order

Part No. 4185-X-1300* Set point range 16.0 up to 38.0 bar
set at 20.0 bar unless otherwise noted on purchase order

*connection C: 1 = M thread (cone connection 37°), 2 = BSPP (G) thread (cone connection 60°)

Available options - on request only:
· Further connections
· With check unit type 66044

Applications:
Approved for air gases, vapours and cryogenic liquefied gases incl. LNG.
Working temperature: -196°C / -321°F (77K) up to +65°C / 149°F (338K)
Ambient temperature: -40°C / -40°F (233K) up to +65°C / 149°F (338K)

Materials		DIN EN	ASTM
1	Body	CW617N	C37700
2	Bonnet (cover)	CW617N	C37700
3	Diaphragm	1.4404	316L
4	Diaphragm ring	1.4301	304
5	Spring	1.4310	313
6	Spring plate	1.4301	304
7	Locking nut	1.4301	304
8	Set point adjuster	1.4301	304
9	Strainer (option)	CW452K	C51900
10	Valve seal	PTFE	
11	Bellow disc	CW614N	C38500
12	Bellow	1.4571	316Ti
13	Tubular overflow	CW614N	C38500
14	Connection fitting	CC493K	C93200

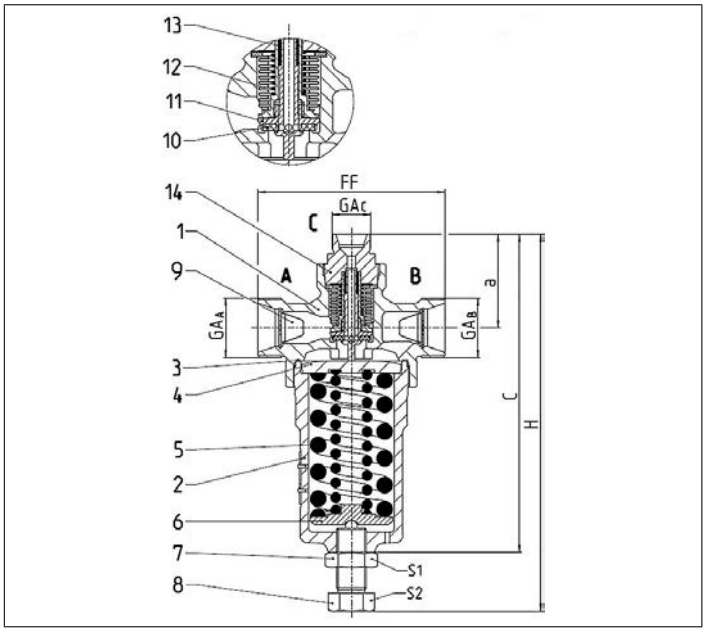

Type 4185	Technical data		
Nominal size	**DN**	**20**	**20**
Dimension code	.X.	MM04020	MG12000
Face-to-face dimension	FF	125	125
Height	H	253	253
Thread	GA_A	M40x2.0	G 1-1/4
Thread	GA_B	M40x2.0	G 1-1/4
Thread	GA_C	M26x1.5	G 3/4
Length	a	63	63
Length	c	214	214
Wrench size across flats	S_1	30	30
Wrench size across flats	S_2	27	27
Weight	ca. kg	4.5	4.5
Kvs-Value	m^3/h	1.5	1.5
Cv-Value	gal/min	1.7	1.7

Dimensions in mm.

Essential: Please confirm pressure range and valve set pressure on purchase order

Edition 2022-11

Pressure Regulator
Type 4186-1 - CombiPressure-Regulator

Cryogenic-Pressure Regulator, stainless steel, PN50

Set point range from 1.0 up to 38.0 bar
Connections: male thread for union connection, BSPP (G) or M thread
Cleaning Standard: "cleaned and degreased for oxygen service"
complete with installed strainer screens - mesh size 0.25 mm - on connection A and B

Part No. 4186-X-1100* Set point range 1.0 up to 12.0 bar
set at 8.0 bar unless otherwise noted on purchase order

Part No. 4186-X-1200* Set point range 6.0 up to 24.0 bar
set at 12.0 bar unless otherwise noted on purchase order

Part No. 4186-X-1300* Set point range 16.0 up to 38.0 bar
set at 20.0 bar unless otherwise noted on purchase order

*connection C: 1 = M thread (cone connection 37°), 2 = BSPP (G) thread (cone connection 60°)

Available options - on request only:
· Further connections
· With check unit type 66044

Applications:
Approved for air gases, vapours and cryogenic liquefied gases incl. LNG.
Working temperature: -196°C / -321°F (77K) up to +65°C / 149°F (338K)
Ambient temperature: -40°C / -40°F (233K) up to +65°C / 149°F (338K)

Materials		DIN EN	ASTM
1	Body	1.4308	A 351 CF8
2	Bonnet (cover)	1.4408	A 351 CF8M
3	Diaphragm	1.4404	A 240 Grade 316L
4	Supporting ring	1.4301	A 276 Grade 304
5	Diaphragm ring	1.4301	A 276 Grade 304
6	Spring plate	1.4301	A 276 Grade 304
7	Spring	1.4571	A 313 Grade 316Ti
8	Spring clamp	1.4301	A 276 Grade 304
9	Locking nut	1.4301	A 276 Grade 304
10	Set point adjuster	1.4301	A 240 Grade 304
11	Strainer (option)	1.4301	A 240 Grade 304
12	Valve seal	PTFE	
13	Bellow disc	1.4571	A 276 Grade 316Ti
14	Bellow	1.4571	A 313 Grade 316Ti
15	Bellow spring	1.4571	A 313 Grade 316Ti
16	Connection fitting	1.4571	A 276 Grade 316Ti

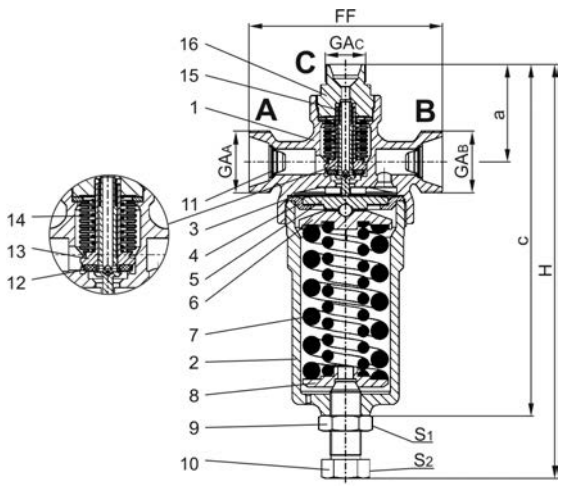

Type 4186	Technical data		
Nominal size	**DN**	**20**	**20**
Dimension code	.X.	MM04020	MG12000
Face-to-face dimension	FF	125	125
Height	H	268	268
Thread	GA_A	M40x2.0	G 1-1/4
Thread	GA_B	M40x2.0	G 1-1/4
Thread	GA_C	M26x1.5	G 3/4
Length	a	63	63
Length	c	227	227
Wrench size across flats	S_1	30	30
Wrench size across flats	S_2	27	27
Weight	ca. kg	4.3	4.3
Kvs-Value	m^3/h	1.2	1.2
Cv-Value	gal/min	1.4	1.4

Dimensions in mm.

Essential: Please confirm pressure range and valve set pressure on purchase order

Pressure Regulator
Type 4182-3 - CombiPressure-Regulator

Cryogenic-Pressure Regulator, stainless steel, PN50

Set point range from 2.0 up to 38.0 bar
Connections: male thread for union connection, BSPP (G) or M thread
Cleaning Standard: "cleaned and degreased for oxygen service"
complete with installed strainer screens - mesh size 0.25 mm - on connection A and B

Part No. 4182.X.3100* Set point range 2.0 up to 10.0 bar
set at 8.0 bar unless otherwise noted on purchase order

Part No. 4182.X.3200* Set point range 8.0 up to 22.0 bar
set at 12.0 bar unless otherwise noted on purchase order

Part No. 4182.X.3300* Set point range 20.0 up to 38.0 bar
set at 20.0 bar unless otherwise noted on purchase order

*connection C: 1 = M thread (cone connection 37°), 2 = BSPP (G) thread (cone connection 60°)

Available options - on request only:
· Further connections
· With check unit type 66044

Applications:
Approved for air gases, vapours and cryogenic liquefied gases incl. LNG.
Working temperature: -196°C / -321°F (77K) up to +65°C / 149°F (338K)
Ambient temperature: -40°C / -40°F (233K) up to +65°C / 149°F (338K)

Materials		DIN EN	ASTM
1	Body	CC491K	C83600
2	Bonnet (cover)	1.4408	CF8M
3	Bellow	1.4571	316Ti
4	Spring plate	1.4571	316Ti
5	Lift stopper	1.4571	316Ti
6	Lift stopper	1.4571	316Ti
7	Spring	1.4310	313
8	Spring clamp	1.4301	304
9	Locking nut	1.4301	304
10	Set point adjuster	1.4301	304
11	Strainer (option)	CW452K	C51900
12	Valve seal	PTFE	
13	Bellow disc	CW614N	C38500
14	Bellow	1.4571	316Ti
15	Bellow spring	1.4571	316Ti
16	Connection fitting	CC493K	C93200
17	Tubular overflow	CW614N	C38500
18	Union nut	1.4301	304
19	Flange cover	1.4308	CF8

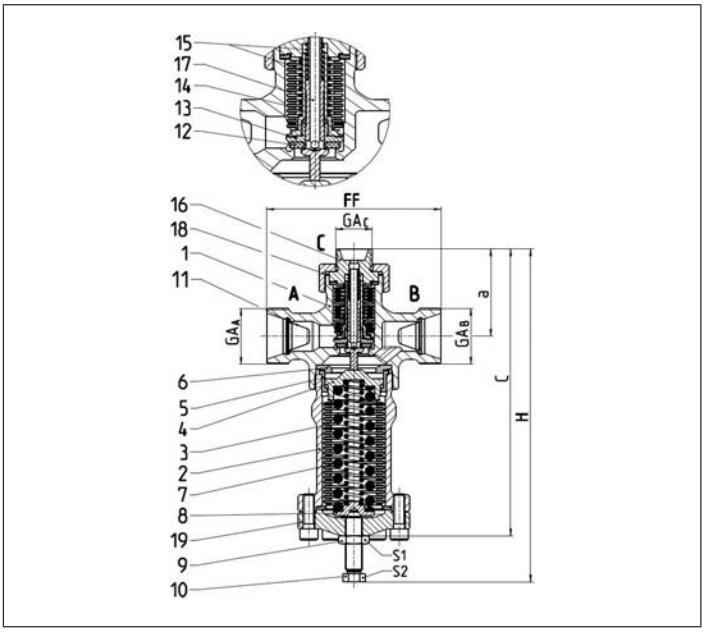

Type 4182	Technical data		
Nominal size	**DN**	**20**	**20**
Dimension code	.X.	MM04020	MG12000
Face-to-face dimension	FF	125	125
Height	H	239	239
Thread	GA_A	M40x2.0	G 1-1/4
Thread	GA_B	M40x2.0	G 1-1/4
Thread	GA_C	M26x1.5	G 3/4
Length	a	63	63
Length	c	206	206
Wrench size across flats	S_1	19	19
Wrench size across flats	S_2	14	14
Weight	ca. kg	3.5	3.5
Kvs-Value	m^3/h	3.2	3.2
Cv-Value	gal/min	3.7	3.7

Dimensions in mm.

Essential: Please confirm pressure range and valve set pressure on purchase order

Edition 2022-11

Pressure Regulator
Type 4186-3 - CombiPressure-Regulator

Cryogenic-Pressure Regulator, stainless steel, PN40

Set point range from 2.0 up to 38.0 bar
Connections: male thread for union connection, BSPP (G) or M thread
Cleaning Standard: "cleaned and degreased for oxygen service"
complete with installed strainer screens - mesh size 0.25 mm - on connection A and B

Part No. 4186.X.3100* Set point range 2.0 up to 10.0 bar
set at 8.0 bar unless otherwise noted on purchase order

Part No. 4186.X.3200* Set point range 8.0 up to 22.0 bar
set at 12.0 bar unless otherwise noted on purchase order

Part No. 4186.X.3300* Set point range 20.0 up to 38.0 bar
set at 20.0 bar unless otherwise noted on purchase order

*connection C: 1 = M thread (cone connection 37°), 2 = BSPP (G) thread (cone connection 60°)

Available options - on request only:
· Further connections
· With check unit type 66044

Applications:
Approved for air gases, vapours and cryogenic liquefied gases incl. LNG.
Working temperature: -196°C / -321°F (77K) up to +65°C / 149°F (338K)
Ambient temperature: -40°C / -40°F (233K) up to +65°C / 149°F (338K)

Materials		DIN EN	ASTM
1	Body	1.4308	A 351 CF8
2	Bonnet (cover)	1.4408	A 351 CF8M
3	Bellow	1.4571	A 313 Grade 316Ti
4	Spring plate	1.4571	A 276 Grade 316Ti
5	Lift stopper	1.4571	A 276 Grade 316Ti
6	Lift stopper	1.4571	A 276 Grade 316Ti
7	Spring	1.4310	A 313 Grade 301
8	Spring clamp	1.4301	A 276 Grade 304
9	Locking nut	1.4301	A 276 Grade 304
10	Set point adjuster	1.4301	A 240 Grade 304
11	Strainer (option)	1.4301	A 240 Grade 304
12	Valve seal	PTFE	
13	Bellow disc	1.4571	A 313 Grade 316Ti
14	Bellow	1.4571	A 313 Grade 316Ti
15	Bellow spring	1.4571	A 313 Grade 316Ti
16	Connection fitting	1.4571	A 313 Grade 316Ti
17	Tubular overflow	1.4571	A 276 Grade 316Ti
18	Union nut	1.4301	A 276 Grade 304
19	Flange cover	1.4308	A 351 CF8

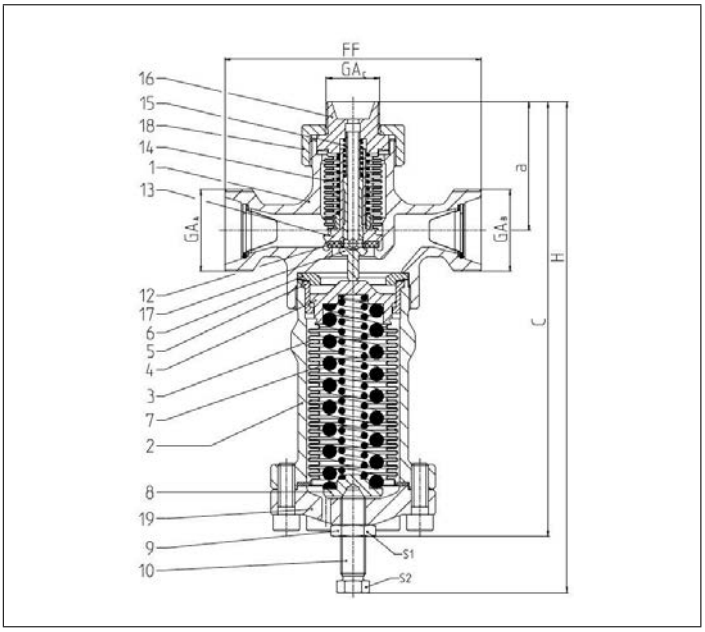

Type 4186	Technical data		
Nominal size	**DN**	**20**	**20**
Dimension code	.X.	MM04020	MG12000
Face-to-face dimension	FF	125	125
Height	H	239	239
Thread	GA_A	M40x2.0	G 1-1/4
Thread	GA_B	M40x2.0	G 1-1/4
Thread	GA_C	M26x1.5	G 3/4
Length	a	63	63
Length	c	212	212
Wrench size across flats	S_1	19	19
Wrench size across flats	S_2	14	14
Weight	ca. kg	3.2	3.2
Kvs-Value	m^3/h	3.2	3.2
Cv-Value	gal/min	3.7	3.7

Dimensions in mm.

Essential: Please confirm pressure range and valve set pressure on purchase order

Pressure Regulator
Type T118 - Globe Valve

Cryogenic Globe Valves with check unit, PN50

suitable for CombiPressure-Regulator type 4182/4186

Material:	Stainless steel
Connections:	Male thread for union connection
Installation position:	Vertically

" cleaned and degreased for oxygen service "

Part No. T118.X.1A0C0
Male thread for union connection

Available options - on request only:
· Butt weld connection for stainless steel pipes acc. to ISO 1127 or ASTM A312
· Union type butt weld fittings for stainless steel pipes acc. to ISO 1127 or ASTM A312
· Union type braze fittings for copper pipes acc. to DIN EN 12449 or ASTM B88
· Thread connection NPT acc. to ANSI B 1.20.1

Applications:
Approved for air gases, vapours and cryogenic liquefied gases incl. LNG.
Working temperature: -196°C / -321°F (77K) up to +65°C / 149°F (338K)
Ambient temperature: -40°C / -40°F (233K) up to +65°C / 149°F (338K)
Maximum operating pressure: 50bar

Materials		DIN EN	ASTM
1	Body	1.4571	A 313 Grade 316Ti
2	Stem	1.4571	A 313 Grade 316Ti
3	Seal	PTFE	
4	Spring plate	1.4301	A 276 Grade 304
5	Gland nut	1.4301	A 276 Grade 304
6	O-ring	PTFE	
7	Spring	1.4571	A 313 Grade 316Ti
8	Snap ring	-	-
9	Guiding disc	1.4571	A 313 Grade 316Ti
10	Body	1.4571	A 313 Grade 316Ti
11	Ball	PTFE	
12	Snap ring	-	-
13	Gland nut	1.4301	A 276 Grade 304
14	Lock ring	1.4122	-
15	Spring compressor	1.4571	A 313 Grade 316Ti
16	Lock ring	1.4435	-

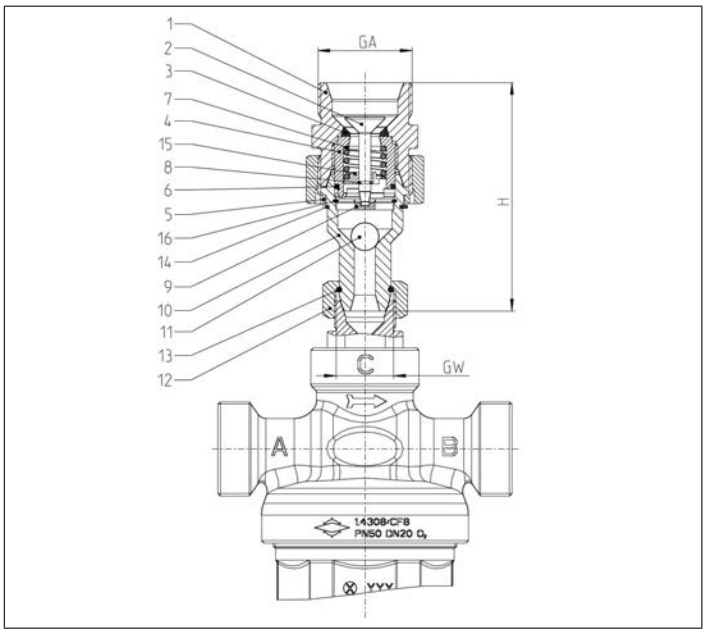

Type T118	Technical data	
Nominal size	**DN**	**20**
Dimension code	.X.	FM02615
Height	H	97
Thread	GA	M40x2.0
Thread	GW	M26x1.5
Weight	ca. kg	0.7
Kvs-Value	m^3/h	2.0
Cv-Value	gal/min	2.3

Dimensions in mm.

Edition 2022-11

Check Valves

Type 05412 - Check Valve

Cryogenic-Check Valves, PN50

Bronze body and cap
with spring, opening pressure ca. 0.1 bar
" cleaned and degreased for oxygen service "

Part No. 05412.X.0001
Socket end for copper pipes acc. to DIN EN 12449 or ASTM B88

Available options - on request only:
· Socket end for stainless steel pipes acc. to ISO 1127

Applications:
Approved for air gases, vapours and cryogenic liquefied gases incl. LNG.
Working temperature: -196°C / -321°F (77K) up to +120°C / +248°F (393K)

Materials		DIN EN	ASTM
1	Body	CC491K	B 62 UNS C83600
2	Valve seal	PTFE / Carbon filled (25%)	
3	Disc	CW614N	B 283 UNS C38500
4	Spring	CW452K	B 159 UNS C51900
5	Bonnet gasket	PTFE	
6	Bolts	1.4301/A2	A 194 B8
7	Cap	CC493K	B 505 UNS C93200

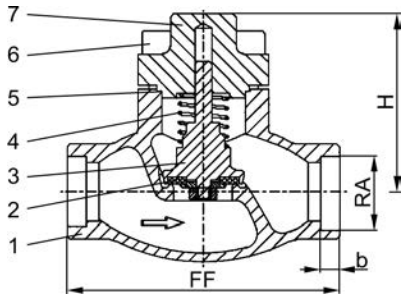

Type 05412 - Standard design	Technical data							
Nominal size	**DN**	**10**	**15**	**20**	**25**	**32**	**40**	**50**
Dimension code	.X.	X=DNRA, Example: valve DN10 for copper pipe RAØ12mm. X=1012						
Face-to-face dimension	FF	60	85	85	115	115	140	160
Height	H	71	71	72	75	87	95	95
Outside pipe-Ø	RA	dependent on order						
Socket depth	b	6	6	8	8	10	13	20
Weight	ca. kg	0.7	1.0	1.3	1.6	2.4	3.9	5.7
Kvs-Value	m^3/h	1.6	4.3	6.7	11.5	12.1	22.6	37.1
Cv-Value	gal/min	1.9	5.0	7.8	13.4	14.1	26.3	43.2

Dimensions in mm. Leakage rates according to technical information: Leakrates HEROSE Check Valves

Check Valves

Type 05412 - Check Valve

Cryogenic-Check Valves, PN50 (DN10-25), PN40 (DN32), PN35 (DN40-50)

Bronze body and cap
with spring, opening pressure ca. 0.1 bar
" cleaned and degreased for oxygen service "

Part No. 05412.X.0008
Complete with brazed copper stubs acc. to DIN EN 12449

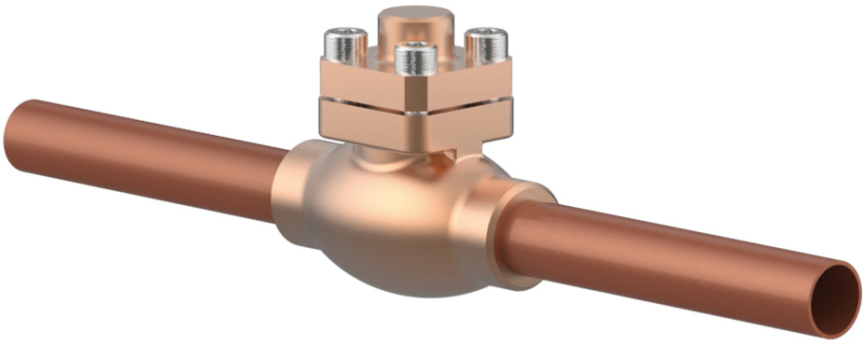

Applications:
Approved for air gases, vapours and cryogenic liquefied gases incl. LNG.
Working temperature: -196°C / -321°F (77K) up to +120°C / +248°F (393K)

Materials		DIN EN	ASTM
1	Body	CC491K	B 62 UNS C83600
2	Valve seal	PTFE / Carbon filled (25%)	
3	Disc	CW614N	B 283 UNS C38500
4	Spring	CW452K	B 159 UNS C51900
5	Bonnet gasket	PTFE	
6	Bolts	1.4301/A2	A 194 B8
7	Cap	CC493K	B 505 UNS C93200
8	Copper stubs	CW024A	B 152 UNS C12200

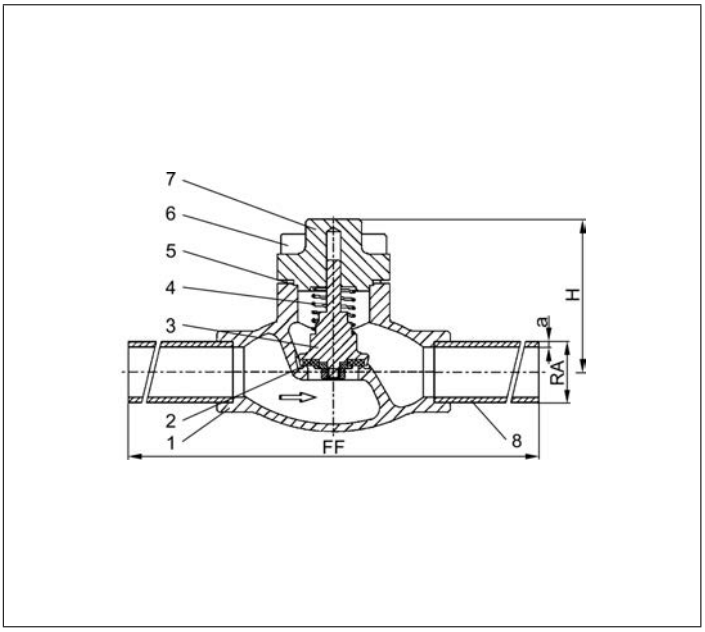

Type 05412 - Standard design	Technical data								
Nominal size	**DN**	**10**	**15**	**15**	**20**	**25**	**32**	**40**	**50**
Dimension code	.X.	1012	1515	1518	2022	2528	3235	4042	5054
Face-to-face dimension	FF	360	385	385	385	415	415	420	460
Height	H	71	71	71	72	75	87	95	95
Outside pipe-Ø	RA	12.0	15.0	18.0	22.0	28.0	35.0	42.0	54.0
Wall thickness pipe	a	1.0	1.5	1.5	1.5	1.5	1.5	1.5	2.0
Weight	ca. kg	0.8	1.1	1.1	1.4	2.0	2.8	4.5	6.5
Kvs-Value	m^3/h	2.2	4.3	4.3	6.7	11.5	12.1	22.6	37.1
Cv-Value	gal/min	2.6	5.0	5.0	7.8	13.4	14.1	26.3	43.2

Dimensions in mm. Leakage rates according to technical information: Leakrates HEROSE Check Valves

Edition 2022-11

Check Valves

Type 05412 - Check Valve

Cryogenic-Check Valves, PN50

Bronze body and cap
with spring, opening pressure ca. 0.1 bar
" cleaned and degreased for oxygen service "

Part No. 05412.X.0007
Complete with brazed stainless steel stubs acc. to DIN EN 10216-5 or ASTM A312

Available options - on request only:
· Further pipe wall thicknesses

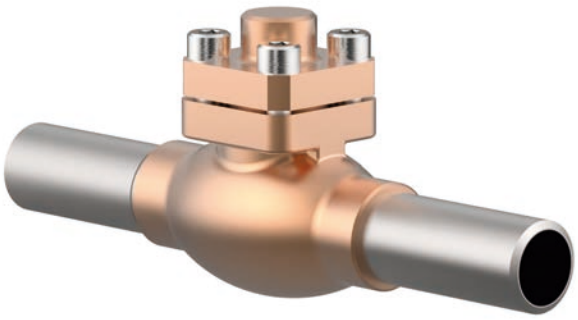

Applications:
Approved for air gases, vapours and cryogenic liquefied gases incl. LNG.
Working temperature: -196°C / -321°F (77K) up to +120°C / +248°F (393K)

Materials		DIN EN	ASTM
1	Body	CC491K	B 62 UNS C83600
2	Valve seal	PTFE / Carbon filled (25%)	
3	Disc	CW614N	B 283 UNS C38500
4	Spring	CW452K	B 159 UNS C51900
5	Bonnet gasket	PTFE	
6	Bolts	1.4301/A2	A 194 B8
7	Cap	CC493K	B 505 UNS C93200
8	Stainless steel stubs	1.4306	A 312 TP304L

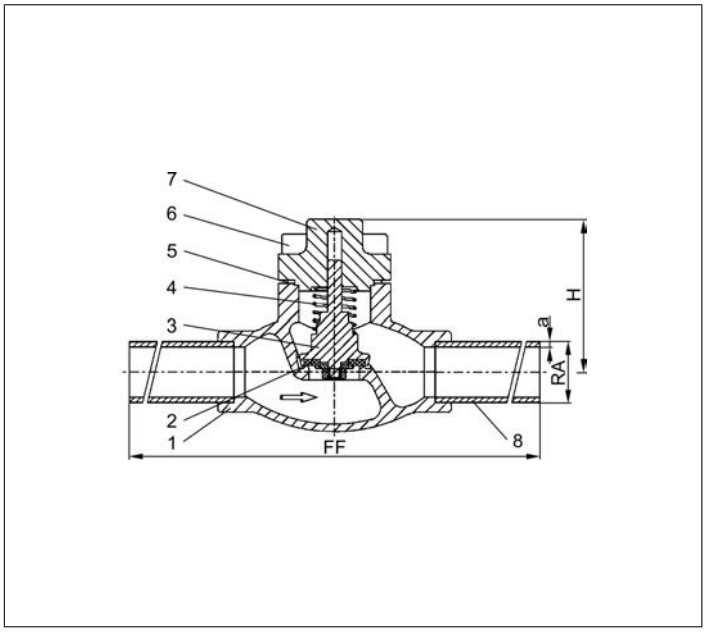

Type 05412 - Standard design	Technical data								
Nominal size	**DN**	**10**	**10**	**15**	**20**	**25**	**32**	**40**	**50**
Dimension code	.X.	1012	1017	1521	2027	2533	3242	4048	5060
Face-to-face dimension	FF	210	210	235	235	265	265	290	310
Height	H	71	71	71	72	75	87	95	95
Outside pipe-Ø ISO 1127	RA	12.0	17.2	21.3	26.9	33.7	42.4	48.3	60.3
Wall thickness pipe ISO 1127	a	1.0	2.3	2.6	2.9	3.2	3.2	3.6	3.6
Outside pipe-Ø ASTM A312	RA	-	17.15	21.34	26.67	33.40	42.16	48.26	60.33
Wall thickness pipe ASTM A312	a	dimensions acc. to S10 or S40							
Weight	ca. kg	0.8	0.8	1.1	1.4	2.0	2.8	4.5	6.5
Kvs-Value	m^3/h	2.2	2.2	4.3	6.7	11.5	12.1	22.6	37.1
Cv-Value	gal/min	2.6	2.6	5.0	7.8	13.4	14.1	26.3	43.2

Dimensions in mm. Leakage rates according to technical information: Leakrates HEROSE Check Valves

Check Valves

Type 05413 - Check Valve

Cryogenic-Check Valves, PN50

Bronze body and cap
with spring, opening pressure ca. 0.1 bar
" cleaned and degreased for oxygen service "

Part No. 05413.X.0001
Female thread connection (G) acc. to ISO 228/1

Part No. 05413.X.0006
Female thread connection NPT acc. to ANSI B 1.20.1

Available options - on request only:
· Female thread connection (R) acc. to ISO 7-Rc

Applications:
Approved for air gases, vapours and cryogenic liquefied gases incl. LNG.
Working temperature: -196°C / -321°F (77K) up to +120°C / +248°F (393K)

Materials		DIN EN	ASTM
1	Body	CC491K	B 62 UNS C83600
2	Valve seal	PTFE / Carbon filled (25%)	
3	Disc	CW614N	B 283 UNS C38500
4	Spring	CW452K	B 159 UNS C51900
5	Bonnet gasket	PTFE	
6	Bolts	1.4301/A2	A 194 B8
7	Cap	CC493K	B 505 UNS C93200

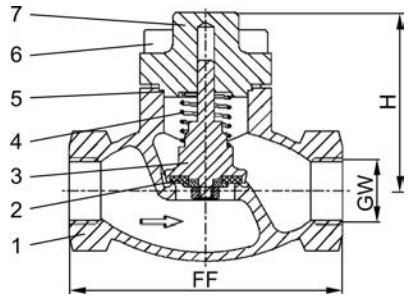

Type 05413 - Standard design	Technical data								
Nominal size	**DN**	**10**	**10**	**15**	**20**	**25**	**32**	**40**	**50**
Thread size	GW	1/4	3/8	1/2	3/4	1	1-1/4	1-1/2	2
Dimension code	.X.	0200	0300	0400	0600	1000	1200	1400	2000
Face-to-face dimension	FF	60	60	85	85	115	115	140	160
Height	H	71	71	71	72	75	87	95	95
Weight	ca. kg	0.7	0.7	1.0	1.3	1.6	2.4	3.9	5.7
Kvs-Value	m^3/h	1.6	2.2	4.3	6.7	11.5	20.6	22.6	37.1
Cv-Value	gal/min	1.9	2.6	5.0	7.8	13.4	23.9	26.3	43.2

Dimensions in mm. Leakage rates according to technical information: Leakrates HEROSE Check Valves

Edition 2022-11

Check Valves

Type 05411 - Check Valve

Cryogenic-Check Valves, PN50

Bronze body and cap
with spring, opening pressure ca. 0.1 bar
" cleaned and degreased for oxygen service "

Part No. 05411.X.0001
Male thread for union connection

Applications:
Approved for air gases, vapours and cryogenic liquefied gases incl. LNG.
Working temperature: -196°C / -321°F (77K) up to +120°C / +248°F (393K)

Materials		DIN EN	ASTM
1	Body	CC491K	B 62 UNS C83600
2	Valve seal	PTFE / Carbon filled (25%)	
3	Disc	CW614N	B 283 UNS C38500
4	Spring	CW452K	B 159 UNS C51900
5	Bonnet gasket	PTFE	
6	Bolts	1.4301/A2	A 194 B8
7	Cap	CC493K	B 505 UNS C93200

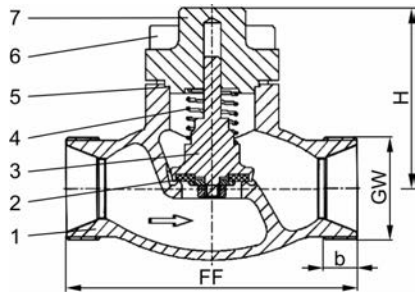

Type 05411 - Standard design	Technical data					
Nominal size	**DN**	**10**	**20**	**32**	**40**	**50**
Dimension code	.X.	0100	0200	0320	0400	0500
Face-to-face dimension	FF	60	85	115	140	160
Height	H	71	72	87	95	95
Union thread	GW	M26x1.5	M40x2.0	M55x2.0	M65x2.0	M78x2.0
Thread length	b	7	11	14	17	20
Weight	ca. kg	0.7	1.3	2.4	3.9	5.7
Kvs-Value	m^3/h	2.2	6.7	12.1	22.6	37.1
Cv-Value	gal/min	2.6	7.8	14.1	26.3	43.2

Dimensions in mm. Leakage rates according to technical information: Leakrates HEROSE Check Valves

Check Valves

Type 05411 - Check Valve

Cryogenic-Check Valves, PN50

Bronze body and cap
with spring, opening pressure ca. 0.1 bar
" cleaned and degreased for oxygen service "

Part No. 05411.X.0008
Completed with union type braze fittings for copper pipes acc. to DIN EN 12449 or ASTM B88

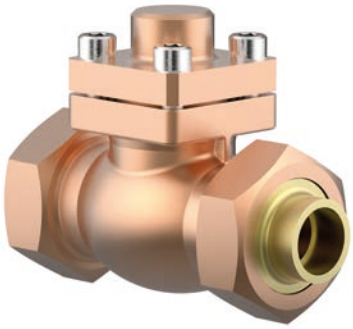

Applications:
Approved for air gases, vapours and cryogenic liquefied gases incl. LNG.
Working temperature: -196°C / -321°F (77K) up to +120°C / +248°F (393K)

Materials		DIN EN	ASTM
1	Body	CC491K	B 62 UNS C83600
2	Valve seal	PTFE / Carbon filled (25%)	
3	Disc	CW614N	B 283 UNS C38500
4	Spring	CW452K	B 159 UNS C51900
5	Bonnet gasket	PTFE	
6	Bolts	1.4301/A2	A 194 B8
7	Cap	CC493K	B 505 UNS C93200
8	Braze fitting	CC493K	B 505 UNS C93200
9	Union nut	CC493K	B 505 UNS C93200

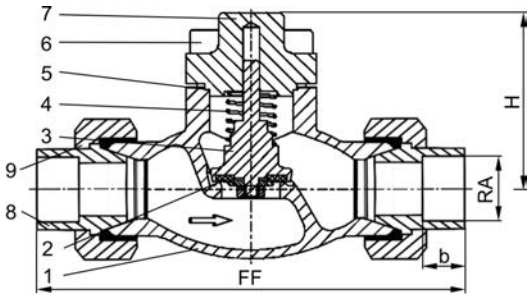

Type 05411 - Standard design	Technical data								
Nominal size	**DN**	**10**	**10**	**20**	**20**	**32**	**32**	**40**	**50**
Dimension code	.X.	1012	1015	1518	2022	2528	3235	4042	5054
Face-to-face dimension	FF	98	98	132	132	171	171	230	230
Height	H	71	71	72	72	87	87	95	95
Outside pipe-Ø	RA	12.0	15.0	18.0	22.0	28.0	35.0	42.0	54.0
Socket depth	b	11	11	14	14	17	17	17	17
Weight	ca. kg	0.9	0.9	2.0	2.0	3.6	3.6	6.0	8.5
Kvs-Value	m^3/h	1.6	2.2	6.0	6.7	11.5	12.1	22.6	37.1
Cv-Value	gal/min	1.9	2.6	7.1	7.8	13.4	14.1	26.3	43.2

Dimensions in mm. Leakage rates according to technical information: Leakrates HEROSE Check Valves

Edition 2022-11

Check Valves

Type 05411 - Check Valve

Cryogenic-Check Valves, PN50

Bronze body and cap
with spring, opening pressure ca. 0.1 bar
" cleaned and degreased for oxygen service "

Part No. 05411.X.0007
Completed with union type butt weld fittings for stainless steel pipes
acc. to ISO 1127 or ASTM A312

Available options - on request only:
· Further pipe wall thicknesses

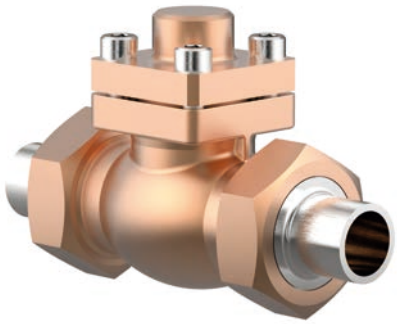

Applications:
Approved for air gases, vapours and cryogenic liquefied gases incl. LNG.
Working temperature: -196°C / -321°F (77K) up to +120°C / +248°F (393K)

Materials		DIN EN	ASTM
1	Body	CC491K	B 62 UNS C83600
2	Valve seal	PTFE / Carbon filled (25%)	
3	Disc	CW614N	B 283 UNS C38500
4	Spring	CW452K	B 159 UNS C51900
5	Bonnet gasket	PTFE	
6	Bolts	1.4301/A2	A 194 B8
7	Cap	CC493K	B 505 UNS C93200
8	Weld fitting	1.4301	A 276 Grade 304
9	Union nut	CC493K	B 505 UNS C93200

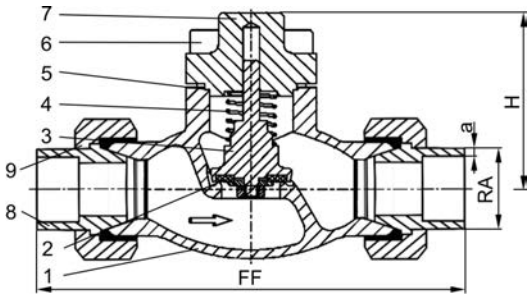

Type 05411 - Standard design	Technical data								
Nominal size	**DN**	**10**	**10**	**20**	**20**	**32**	**32**	**40**	**50**
Dimension code	.X.	1012	1017	1521	2027	2533	3242	4048	5060
Face-to-face dimension	FF	137	141	168	168	203	203	230	263
Height	H	71	71	72	72	87	87	95	95
Outside pipe-Ø ISO 1127	RA	12.0	17.2	21.3	26.9	33.7	42.4	48.3	60.3
Wall thickness pipe ISO 1127	a	1.0	2.3	2.6	2.0	3.2	2.0	3.6	3.6
Outside pipe-Ø ASTM A312	RA	-	17.15	21.34	26.67	33.40	42.16	48.26	60.33
Wall thickness pipe ASTM A312	a	dimensions acc. to S10 or S40							
Weight	ca. kg	0.9	0.9	2.0	2.0	3.6	3.6	6.0	8.5
Kvs-Value	m^3/h	1.6	2.2	6.7	6.7	12.1	12.1	22.6	37.1
Cv-Value	gal/min	1.9	2.6	7.8	7.8	14.1	14.1	26.3	43.2

Dimensions in mm. Leakage rates according to technical information: Leakrates HEROSE Check Valves

Check Valves

Type 05416 - Check Valve

Cryogenic-Check Valves, PN50 (DN65=PN45, DN150=PN40)

Stainless steel body and bronze cap
with spring, opening pressure ca. 0.1 bar
" cleaned and degreased for oxygen service "

Part No. 05416.X.000*
* Butt weld connection for stainless steel pipes acc. to ISO 1127 or ASTM A312

Part No. 05416.X.0004
Socket weld connection for stainless steel pipes acc. to ISO 1127 or ASTM A312

Available options - on request only:
· Welded stainless steel stubs acc. to ISO 1127 or ASTM A312 - length FF + 200mm

Applications:
Approved for air gases, vapours and cryogenic liquefied gases incl. LNG.
Working temperature: -196°C / -321°F (77K) up to +120°C / +248°F (393K)

Materials		DIN EN	ASTM
1	Body	1.4308	A 351 CF8
2	Valve seal up to DN50	PTFE / Carbon filled (25%)	
2a	Valve seal from DN65	PTFE	
3	Disc	CW614N	B 283 UNS C38500
4	Spring	CW452K	B 159 UNS C51900
5	Bonnet gasket	PTFE	
6	Bolts	1.4301/A2	A 194 B8
7	Cap	CC493K	B 505 UNS C93200

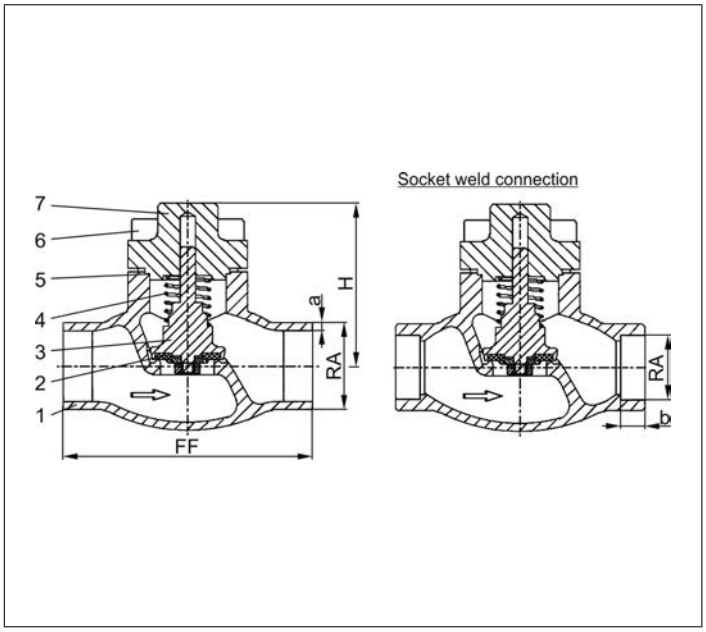

Type 05416 - Standard design	Technical data													
Nominal size	**DN**	**10**	**15**	**15**	**20**	**25**	**32**	**40**	**40**	**50**	**65**	**80**	**100**	**150**
Dimension code	.X.	1012	1517	1521	2026	2533	3238	4042	4048	5060	657x	8088	0114	0168
Face-to-face dimension	FF	70	85	85	100	115	115	130	130	155	205	245	280	400
Height	H	71	71	71	72	75	87	95	95	95	125	150	185	215
Outside pipe-Ø ISO 1127	RA	12.0	17.2	21.3	26.9	33.7	38.0	42.4	48.3	60.3	76.1	88.9	114.3	168.3
Wall thickness pipe ISO 1127	a	1.0	1.6	2.0	2.0	2.0	2.0	2.0	2.0	2.0	2.9	3.2	6.0	7.1
Outside pipe-Ø ASTM A312	RA	13.72	17.15	21.34	26.67	33.40	-	42.16	48.26	60.33	73.03	88.90	114.3	168.3
Wall thickness pipe ASTM A312	a	dimensions acc. to S10 or S40												
Socket depth	b	6	10	10	13	13	-	13	13	16	16	16	20	20
Weight	ca. kg	0.7	0.95	1.0	1.3	1.6	2.4	3.9	3.9	5.7	9.6	14.6	20.0	51.0
Kvs-Value	m^3/h	1.6	3.8	4.3	6.7	11.5	14.0	20.6	22.6	37.1	71.1	104.0	170.0	350.0
Cv-Value	gal/min	1.9	4.4	5.0	7.8	13.4	16.2	23.9	26.3	43.2	82.9	121.3	198.3	408.4

Dimensions in mm. Leakage rates according to technical information: Leakrates HEROSE Check Valves

Edition 2022-11

Check Valves

Type 05415 - Check Valve

Cryogenic-Check Valves, PN50

Stainless steel body and bronze cap
with spring, opening pressure ca. 0.1 bar
" cleaned and degreased for oxygen service "

Part No. 05415.X.0001
Female thread connection (G) acc. to ISO 228/1

Part No. 05415.X.0006
Female thread connection NPT acc. to ANSI B 1.20.1

Available options - on request only:
· Female thread connection (R) acc. to ISO 7-Rc

Applications:
Approved for air gases, vapours and cryogenic liquefied gases incl. LNG.
Working temperature: -196°C / -321°F (77K) up to +120°C / +248°F (393K)

Materials		DIN EN	ASTM
1	Body	1.4308	A 351 CF8
2	Valve seal	PTFE / Carbon filled (25%)	
3	Disc	CW614N	B 283 UNS C38500
4	Spring	CW452K	B 159 UNS C51900
5	Bonnet gasket	PTFE	
6	Bolts	1.4301/A2	A 194 B8
7	Cap	CC493K	B 505 UNS C93200

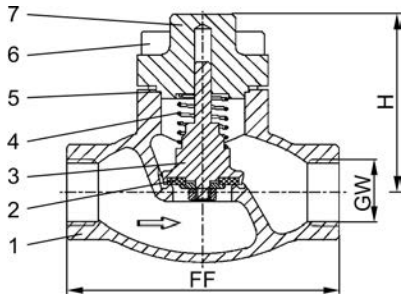

Type 05415 - Standard design	Technical data								
Nominal size	**DN**	**10**	**10**	**15**	**20**	**25**	**32**	**40**	**50**
Thread size	GW	1/4	3/8	1/2	3/4	1	1-1/4	1-1/2	2
Dimension code	.X.	0200	0300	0400	0600	1000	1200	1400	2000
Face-to-face dimension	FF	70	70	85	100	115	130	130	155
Height	H	71	71	71	72	75	95	95	95
Weight	ca. kg	0.7	0.7	1.0	1.3	1.6	3.9	3.9	5.7
Kvs-Value	m^3/h	1.6	2.2	4.3	6.7	11.5	20.6	22.6	37.1
Cv-Value	gal/min	1.9	2.6	5.0	7.8	13.4	23.9	26.3	43.2

Dimensions in mm. Leakage rates according to technical information: Leakrates HEROSE Check Valves

Check Valves

Type 05418 - Check Valve, DIN EN Flanges

Cryogenic-Check Valves, PN40

Stainless steel body and bronze cap
with spring, opening pressure ca. 0.1 bar
" cleaned and degreased for oxygen service "

Part No. 05418.X.0002
Flanged connection acc. to DIN EN 1092-1 PN40

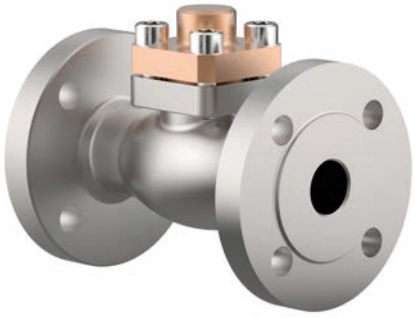

Applications:
Approved for air gases, vapours and cryogenic liquefied gases incl. LNG.
Working temperature: -196°C / -321°F (77K) up to +120°C / +248°F (393K)

Materials		DIN EN	ASTM
1	Body	1.4308	A 351 CF8
2	Valve seal up to DN50	PTFE / Carbon filled (25%)	
2a	Valve seal from DN65	PTFE	
3	Disc	CW614N	B 283 UNS C38500
4	Spring	CW452K	B 159 UNS C51900
5	Bonnet gasket	PTFE	
6	Bolts	1.4301/A2	A 194 B8
7	Cap	CC493K	B 505 UNS C93200

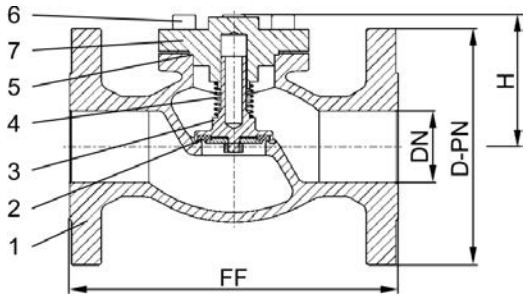

Type 05418 - Standard design	Technical data									
Nominal size	**DN**	**15**	**20**	**25**	**40**	**50**	**65**	**80**	**100**	**150**
Dimension code - Flange EN 1092-1 PN40	.X.	0150	0200	0250	0400	0500	0650	0800	1000	1500
Flange-Ø	D-PN	95	105	115	150	165	185	200	235	300
Face-to-face dimension	FF	140	150	160	200	230	290	310	350	550
Height	H	70	75	75	95	90	125	150	165	215
Weight	ca. kg	2.9	3.4	4.4	6.4	11.6	19.2	25.2	39.8	72.7
Kvs-Value	m^3/h	4.3	6.7	11.5	22.6	37.1	71.1	104.0	170.0	350.0
Cv-Value	gal/min	5.0	7.8	13.4	26.3	43.2	82.9	121.3	198.3	408.4

Dimensions in mm. Leakage rates according to technical information: Leakrates HEROSE Check Valves

Edition 2022-11

Check Valves

Type 05418 - Check Valve, ANSI Flanges

Cryogenic-Check Valves, class 300

Stainless steel body and bronze cap
with spring, opening pressure ca. 0.1 bar
" cleaned and degreased for oxygen service "

Part No. 05418.X.0003
Flanged connection acc. to ANSI B16.5 class 300

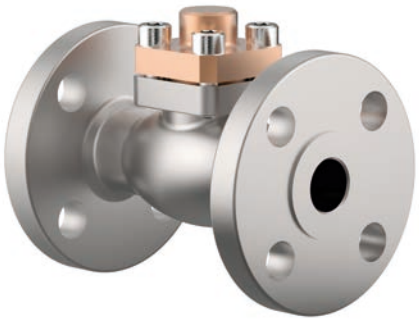

Applications:
Approved for air gases, vapours and cryogenic liquefied gases incl. LNG.
Working temperature: -196°C / -321°F (77K) up to +120°C / +248°F (393K)

Materials		DIN EN	ASTM
1	Body	1.4308	A 351 CF8
2	Valve seal up to DN50	PTFE / Carbon filled (25%)	
2a	Valve seal from DN65	PTFE	
3	Disc	CW614N	B 283 UNS C38500
4	Spring	CW452K	B 159 UNS C51900
5	Bonnet gasket	PTFE	
6	Bolts	1.4301/A2	A 194 B8
7	Cap	CC493K	B 505 UNS C93200

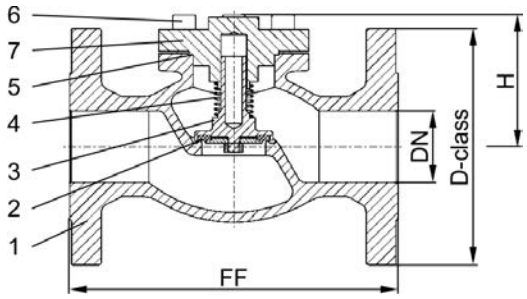

Type 05418 - Standard design	Technical data									
Nominal size	**DN**	**15**	**20**	**25**	**40**	**50**	**65**	**80**	**100**	**150**
Dimension code - Flange ANSI B16.5 class 300	.X.	0400	0600	1000	1400	2000	2400	3000	4000	6000
Flange-Ø	D-class	95	115	125	155	165	190	210	255	320
Face-to-face dimension	FF	140	150	160	200	230	290	310	350	597
Height	H	70	75	75	95	90	125	150	165	215
Weight	ca. kg	2.9	3.4	4.4	6.4	11.6	19.2	25.2	39.8	90.3
Kvs-Value	m^3/h	4.3	6.7	11.5	22.6	37.1	71.1	104.0	170.0	350.0
Cv-Value	gal/min	5.0	7.8	13.4	26.3	43.2	82.9	121.3	198.3	408.4

Dimensions in mm. Leakage rates according to technical information: Leakrates HEROSE Check Valves

Check Valves

Type 05418 - Check Valve, ANSI Flanges

Cryogenic-Check Valves, class 150

Stainless steel body and bronze cap
with spring, opening pressure ca. 0.1 bar
" cleaned and degreased for oxygen service "

Part No. 05418.X.0001
Flanged connection acc. to ANSI B16.5 class 150

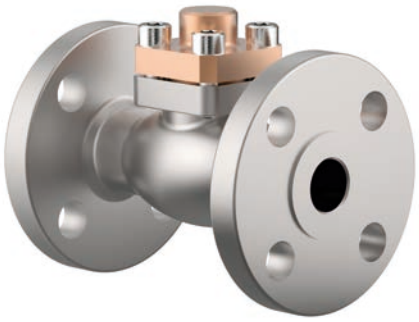

Applications:
Approved for air gases, vapours and cryogenic liquefied gases incl. LNG.
Working temperature: -196°C / -321°F (77K) up to +120°C / +248°F (393K)

Materials		DIN EN	ASTM
1	Body	1.4308	A 351 CF8
2	Valve seal up to DN50	PTFE / Carbon filled (25%)	
2a	Valve seal from DN65	PTFE	
3	Disc	CW614N	B 283 UNS C38500
4	Spring	CW452K	B 159 UNS C51900
5	Bonnet gasket	PTFE	
6	Bolts	1.4301/A2	A 194 B8
7	Cap	CC493K	B 505 UNS C93200

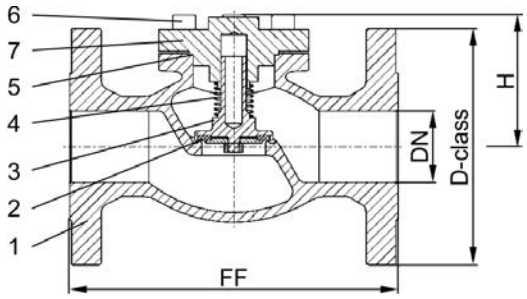

Type 05418 - Standard design	Technical data									
Nominal size	**DN**	**15**	**20**	**25**	**40**	**50**	**65**	**80**	**100**	**150**
Dimension code - Flange ANSI B16.5 class 150	.X.	0400	0600	1000	1400	2000	2400	3000	4000	6000
Flange-Ø	D-class	90	100	110	125	150	180	190	230	280
Face-to-face dimension	FF	140	150	160	200	230	290	310	350	577
Height	H	70	75	75	95	90	125	150	165	215
Weight	ca. kg	2.9	3.4	4.4	6.4	11.6	19.2	25.2	39.8	81.5
Kvs-Value	m^3/h	4.3	6.7	11.5	22.6	37.1	71.1	104.0	170.0	350.0
Cv-Value	gal/min	5.0	7.8	13.4	26.3	43.2	82.9	121.3	198.3	408.4

Dimensions in mm. Leakage rates according to technical information: Leakrates HEROSE Check Valves

Edition 2022-11

Check Valves

Type 05414 - Check Valve

Cryogenic-Check Valves, PN50 (DN65=PN45, DN150=PN40)

Stainless steel body and cap
with spring, opening pressure ca. 0.1 bar
" cleaned and degreased for oxygen service "

Part No. 05414.X.000*
* Butt weld connection for stainless steel pipes acc. to ISO 1127 or ASTM A312

Part No. 05414.X.0004
Socket weld connection for stainless steel pipes acc. to ISO 1127 or ASTM A312

Available options - on request only:
· Welded stainless steel stubs acc. to ISO 1127 or ASTM A312 - length FF + 200mm
· Further pipe wall thicknesses

Applications:
Approved for air gases, vapours and cryogenic liquefied gases incl. LNG.
Working temperature: -196°C / -321°F (77K) up to +120°C / +248°F (393K)

Materials		DIN EN	ASTM
1	Body	1.4308	A 351 CF8
2	Valve seal up to DN50	PTFE / Carbon filled (25%)	
2a	Valve seal from DN65	PTFE	
3	Disc	1.4301	A 276 Grade 304
4	Spring	1.4571	A 313 Grade 316Ti
5	Bonnet gasket	PTFE	
6	Bolts	1.4301/A2	A 194 B8
7	Cap	1.4301	A 276 Grade 304
7a	Bush from DN65	PTFE	

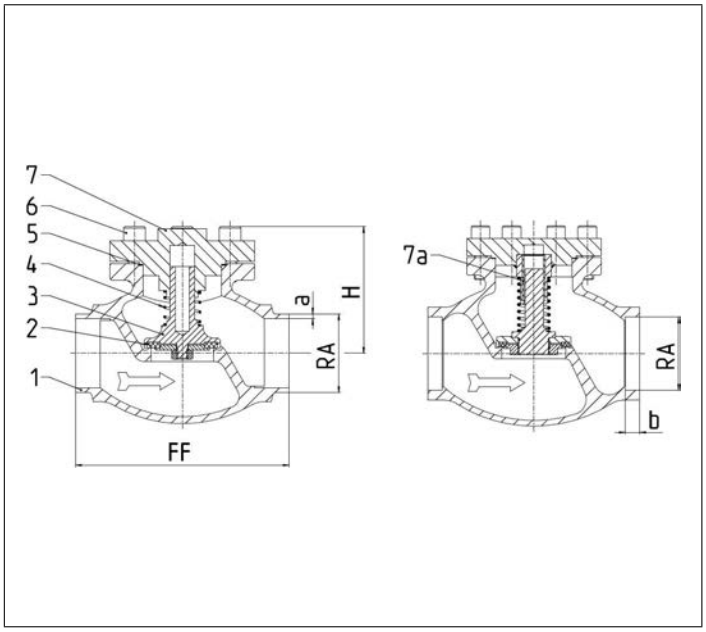

Type 05414 - Standard design	Technical data													
Nominal size	**DN**	**10**	**15**	**15**	**20**	**25**	**32**	**40**	**40**	**50**	**65**	**80**	**100**	**150**
Dimension code	.X.	1012	1517	1521	2026	2533	3238	4042	4048	5060	657x	8088	0114	0168
Face-to-face dimension	FF	70	85	85	100	115	115	130	130	155	205	245	280	400
Height	H	71	71	71	72	75	87	95	95	95	125	150	185	215
Outside pipe-Ø ISO 1127	RA	12.0	17.2	21.3	26.9	33.7	38.0	42.4	48.3	60.3	76.1	88.9	114.3	168.3
Wall thickness pipe ISO 1127	a	1.0	1.6	2.0	2.0	2.0	2.0	2.0	2.0	2.0	2.9	3.2	6.0	7.1
Outside pipe-Ø ASTM A312	RA	13.72	17.15	21.34	26.67	33.40	-	42.16	48.26	60.33	73.03	88.90	114.3	168.3
Wall thickness pipe ASTM A312	a	dimensions acc. to S10 or S40												
Socket depth	b	6	10	10	13	13	-	13	13	16	16	16	20	20
Weight	ca. kg	0.7	0.95	1.0	1.3	1.6	2.4	3.9	3.9	5.7	9.6	14.6	20.0	51.0
Kvs-Value	m^3/h	1.6	3.8	4.3	6.7	11.5	14.0	20.6	22.6	37.1	71.1	104.0	170.0	350.0
Cv-Value	gal/min	1.9	4.4	5.0	7.8	13.4	16.2	23.9	26.3	43.2	82.9	121.3	198.3	408.4

Dimensions in mm. Leakage rates according to technical information: Leakrates HEROSE Check Valves

Check Valves

Type 05414 - Check Valve

Cryogenic-Check Valves

Stainless steel body and cap
with spring, opening pressure ca. 0.1 bar

Part No. 05414.0219.0001, PN20
Butt weld connection for stainless steel pipes acc. to ISO 1127 or ASTM A312

Part No. 05414.0219.0004, PN25
Socket weld connection for stainless steel pipes acc. to ISO 1127 or ASTM A312

Available options - on request only

Applications:
Approved for air gases, vapours and cryogenic liquefied gases incl. LNG.
Working temperature: -196°C / -321°F (77K) up to +120°C / +248°F (393K)

Materials		DIN EN	ASTM
1	Body	1.4308	A 351 CF8
2	Valve seal	PTFE	
3	Disc	1.4301	A 276 Grade 304
4	Spring	1.4571	A 313 Grade 316Ti
5	Bonnet gasket	PTFE	
6	Bolts	1.4301/A2	A 194 B8
7	Cap	1.4301	A 276 Grade 304

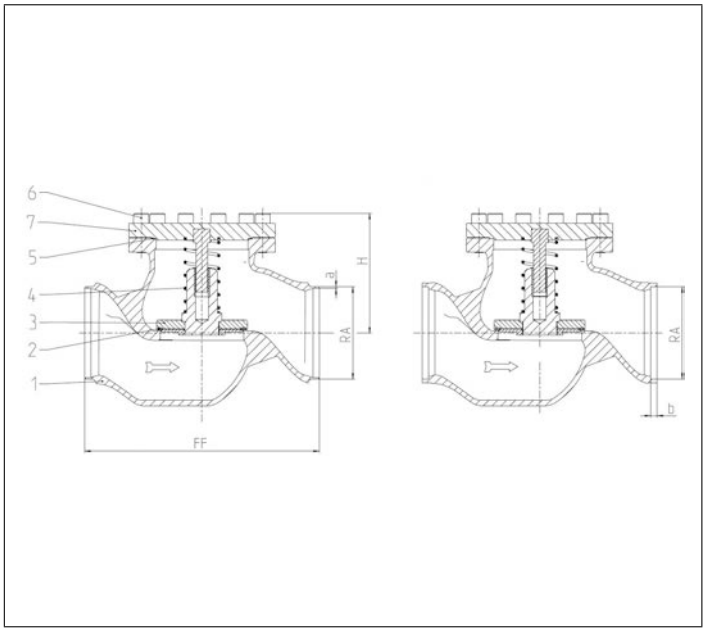

Type 05414 - Standard design	Technical data	
Nominal size	**DN**	**200**
Dimension code	.X.	0219
Face-to-face dimension	FF	560
Height	H	285
Outside pipe-Ø ISO 1127	RA	219.1
Wall thickness pipe ISO 1127	a	6.3
Outside pipe-Ø ASTM A312	RA	219.1
Wall thickness pipe ASTM A312	a	dimensions acc. to S10 or S40
Socket depth	b	15
Weight	ca. kg	111
Kvs-Value	m^3/h	680
Cv-Value	gal/min	793

Dimensions in mm. Leakage rates according to technical information: Leakrates HEROSE Check Valves

Edition 2022-11

Check Valves

Type 05417 - Check Valve

Cryogenic-Check Valves, PN50

Stainless steel body and cap
with spring, opening pressure ca. 0.1 bar
" cleaned and degreased for oxygen service "

Part No. 05417.X.0001
Female thread connection (G) acc. to ISO 228/1

Part No. 05417.X.0006
Female thread connection NPT acc. to ANSI B 1.20.1

Available options - on request only:
· Female thread connection (R) acc. to ISO 7-Rc

Applications:
Approved for air gases, vapours and cryogenic liquefied gases incl. LNG.
Working temperature: -196°C / -321°F (77K) up to +120°C / +248°F (393K)

Materials		DIN EN	ASTM
1	Body	1.4308	A 351 CF8
2	Valve seal	PTFE / Carbon filled (25%)	
3	Disc	1.4301	A 276 Grade 304
4	Spring	1.4571	A 313 Grade 316Ti
5	Bonnet gasket	PTFE	
6	Bolts	1.4301/A2	A 194 B8
7	Cap	1.4301	A 276 Grade 304

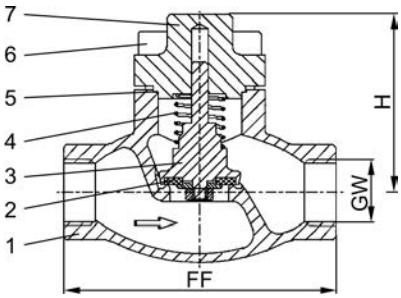

Type 05417 - Standard design	Technical data								
Nominal size	**DN**	**10**	**10**	**15**	**20**	**25**	**40**	**40**	**50**
Thread size	GW	1/4	3/8	1/2	3/4	1	1-1/4	1-1/2	2
Dimension code	.X.	0200	0300	0400	0600	1000	1200	1400	2000
Face-to-face dimension	FF	70	70	85	100	115	130	130	155
Height	H	71	71	71	72	75	95	95	95
Weight	ca. kg	0.7	0.7	1.0	1.3	1.6	3.9	3.9	5.7
Kvs-Value	m^3/h	1.6	2.2	4.3	6.7	11.5	20.6	22.6	37.1
Cv-Value	gal/min	1.9	2.6	5.0	7.8	13.4	23.9	26.3	43.2

Dimensions in mm. Leakage rates according to technical information: Leakrates HEROSE Check Valves

Check Valves

Type 05419 - Check Valve, DIN EN Flanges

Cryogenic-Check Valves, PN40

Stainless steel body and cap
with spring, opening pressure ca. 0.1 bar
" cleaned and degreased for oxygen service "

Part No. 05419.X.0002
Flanged connection acc. to DIN EN 1092-1 PN40

Applications:
Approved for air gases, vapours and cryogenic liquefied gases incl. LNG.
Working temperature: -196°C / -321°F (77K) up to +120°C / +248°F (393K)

Materials		DIN EN	ASTM
1	Body	1.4308	A 351 CF8
2	Valve seal up to DN50	PTFE / Carbon filled (25%)	
2a	Valve seal from DN65	PTFE	
3	Disc	1.4301	A 276 Grade 304
4	Spring	1.4571	A 313 Grade 316Ti
5	Bonnet gasket	PTFE	
6	Bolts	1.4301/A2	A 194 B8
7	Cap	1.4301	A 276 Grade 304
7a	Bush from DN65	PTFE	

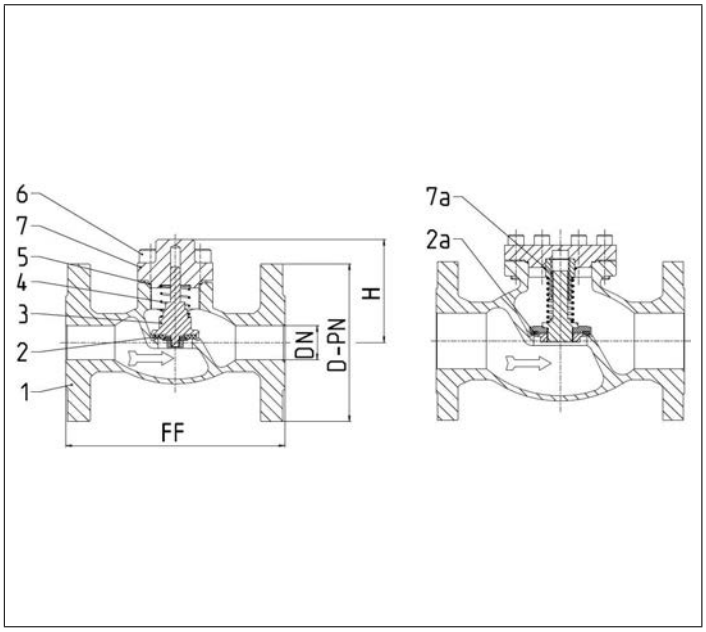

Type 05419 - Standard design	Technical data									
Nominal size	**DN**	**15**	**20**	**25**	**40**	**50**	**65**	**80**	**100**	**150**
Dimension code - Flange EN 1092-1 PN40	.X.	0150	0200	0250	0400	0500	0650	0800	1000	1500
Flange-Ø	D-PN	95	105	115	150	165	185	200	235	300
Face-to-face dimension	FF	140	150	160	200	230	290	310	350	550
Height	H	70	75	75	95	90	125	150	165	215
Weight	ca. kg	2.9	3.4	4.4	6.4	11.6	19.2	25.2	39.8	72.7
Kvs-Value	m^3/h	4.3	6.7	11.5	22.6	37.1	71.1	104.0	170.0	350.0
Cv-Value	gal/min	5.0	7.8	13.4	26.3	43.2	82.9	121.3	198.3	408.4

Dimensions in mm. Leakage rates according to technical information: Leakrates HEROSE Check Valves

Edition 2022-11

Check Valves

Type 05419 - Check Valve, ANSI Flanges

Cryogenic-Check Valves, class 300

Stainless steel body and cap
with spring, opening pressure ca. 0.1 bar
" cleaned and degreased for oxygen service "

Part No. 05419.X.0003
Flanged connection acc. to ANSI B16.5 class 300

Applications:
Approved for air gases, vapours and cryogenic liquefied gases incl. LNG.
Working temperature: -196°C / -321°F (77K) up to +120°C / +248°F (393K)

Materials		DIN EN	ASTM
1	Body	1.4308	A 351 CF8
2	Valve seal up to DN50	PTFE / Carbon filled (25%)	
2a	Valve seal from DN65	PTFE	
3	Disc	1.4301	A 276 Grade 304
4	Spring	1.4571	A 313 Grade 316Ti
5	Bonnet gasket	PTFE	
6	Bolts	1.4301/A2	A 194 B8
7	Cap	1.4301	A 276 Grade 304
7a	Bush from DN65	PTFE	

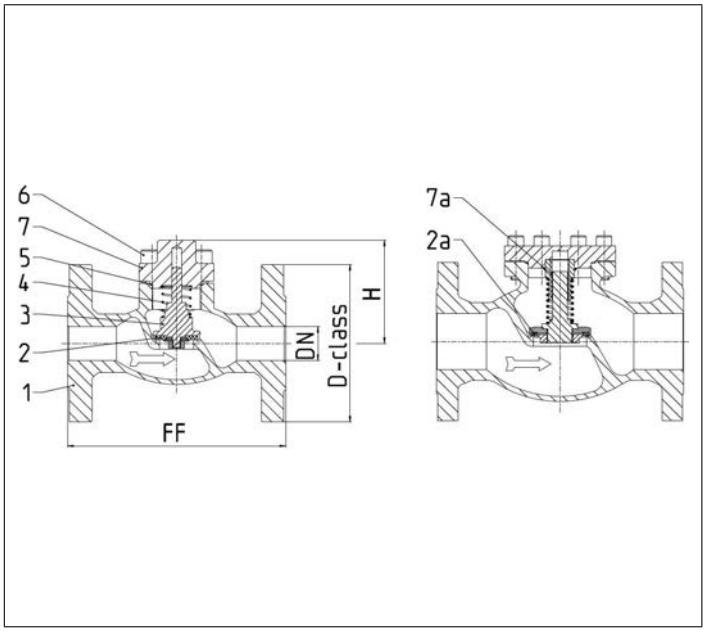

Type 05419 - Standard design	Technical data									
Nominal size	**DN**	**15**	**20**	**25**	**40**	**50**	**65**	**80**	**100**	**150**
Dimension code - Flange ANSI B16.5 class 300	.X.	0400	0600	1000	1400	2000	2400	3000	4000	6000
Flange-Ø	D-class	95	115	125	155	165	190	210	255	320
Face-to-face dimension	FF	140	150	160	200	230	290	310	350	597
Height	H	70	75	75	95	90	125	150	165	215
Weight	ca. kg	2.9	3.4	4.4	6.4	11.6	19.2	25.2	39.8	90.3
Kvs-Value	m^3/h	4.3	6.7	11.5	22.6	37.1	71.1	104.0	170.0	350.0
Cv-Value	gal/min	5.0	7.8	13.4	26.3	43.2	82.9	121.3	198.3	408.4

Dimensions in mm. Leakage rates according to technical information: Leakrates HEROSE Check Valves

Check Valves

Type 05419 - Check Valve, ANSI Flanges

Cryogenic-Check Valves, class 150

Stainless steel body and cap
with spring, opening pressure ca. 0.1 bar
" cleaned and degreased for oxygen service "

Part No. 05419.X.0001
Flanged connection acc. to ANSI B16.5 class 150

Applications:
Approved for air gases, vapours and cryogenic liquefied gases incl. LNG.
Working temperature: -196°C / -321°F (77K) up to +120°C / +248°F (393K)

Materials		DIN EN	ASTM
1	Body	1.4308	A 351 CF8
2	Valve seal up to DN50	PTFE / Carbon filled (25%)	
2a	Valve seal from DN65	PTFE	
3	Disc	1.4301	A 276 Grade 304
4	Spring	1.4571	A 313 Grade 316Ti
5	Bonnet gasket	PTFE	
6	Bolts	1.4301/A2	A 194 B8
7	Cap	1.4301	A 276 Grade 304
7a	Bush from DN65	PTFE	

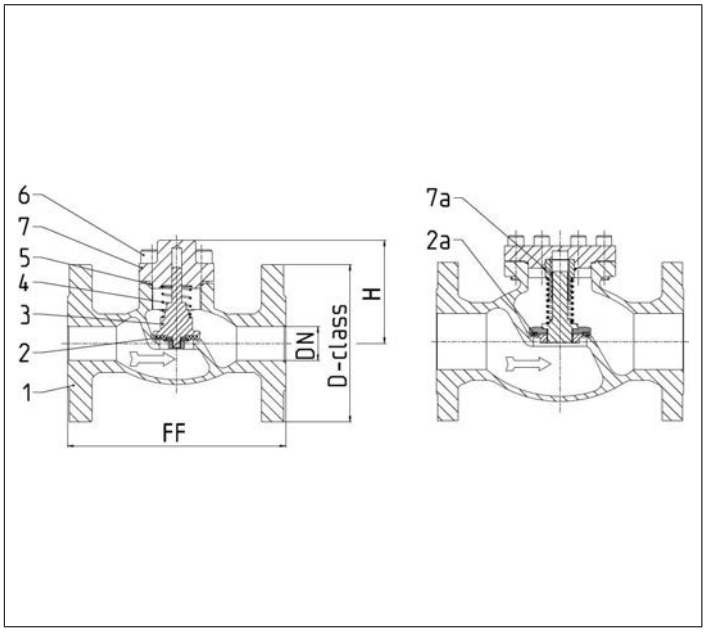

Type 05419 - Standard design	Technical data									
Nominal size	**DN**	**15**	**20**	**25**	**40**	**50**	**65**	**80**	**100**	**150**
Dimension code - Flange ANSI B16.5 class 150	.X.	0400	0600	1000	1400	2000	2400	3000	4000	6000
Flange-Ø	D-class	90	100	110	125	150	180	190	230	280
Face-to-face dimension	FF	140	150	160	200	230	290	310	350	577
Height	H	70	75	75	95	90	125	150	165	215
Weight	ca. kg	2.9	3.4	4.4	6.4	11.6	19.2	25.2	39.8	81.5
Kvs-Value	m^3/h	4.3	6.7	11.5	22.6	37.1	71.1	104.0	170.0	350.0
Cv-Value	gal/min	5.0	7.8	13.4	26.3	43.2	82.9	121.3	198.3	408.4

Dimensions in mm. Leakage rates according to technical information: Leakrates HEROSE Check Valves

Edition 2022-11

Spare Parts for Check Valves

Type 28205, Type 28206 - Check Disc complete

for Cryogenic-Check Valves
brass check disc CW614N
" cleaned and degreased for oxygen service "

Part No. 28205.X.0000

suitable for:

Type	Nominal size
05411, 05412, 05413, 05415	DN10 - DN50
05416	DN10 - DN150
05418	DN25 - DN150

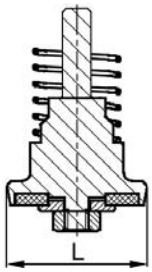

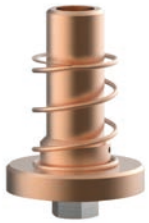

Type 28205.X.0000	Technical data											
Nominal size	**DN**	**10**	**15**	**20**	**25**	**32**	**40**	**50**	**65**	**80**	**100**	**150**
Dimension code	.X.	0100	0150	0200	0250	0320	0400	0500	0650	0800	1000	1500
Disc Ø	L	23	25	30	34.5	42	47	55	73	86	104	155
Weight	ca. kg	0.05	0.07	0.09	0.10	0.15	0.20	0.34	0.48	0.66	1.05	3.28

Dimensions in mm.

for Cryogenic-Check Valves
stainless steel check disc 1.4301
" cleaned and degreased for oxygen service "

Part No. 28206.X.0000

suitable for:

Type	Nominal size
05414	DN10 - DN150
05417	DN10 - DN50
05419	DN25 - DN150

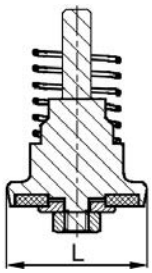

Type 28206.X.0000	Technical data											
Nominal size	**DN**	**10**	**15**	**20**	**25**	**32**	**40**	**50**	**65**	**80**	**100**	**150**
Dimension code	.X.	0100	0150	0200	0250	0320	0400	0500	0650	0800	1000	1500
Disc Ø	L	23	25	30	34.5	42	47	55	73	86	104	155
Weight	ca. kg	0.05	0.07	0.09	0.10	0.15	0.20	0.34	0.48	0.66	1.05	3.28

Dimensions in mm.

Spare Parts for Check Valves

Type 30514 - Sealing spare part kit

for Cryogenic Globe Valves and Check Valves

" cleaned and degreased for oxygen service "

consisting of:
· 2x Bonnet gasket PTFE
· 1x Disc seal PTFE/Carbon filled (25%)
· 1x Disc nut 1.4301

Part No. 30514.X.0000

suitable for:

Type	Nominal size
05411, 05412, 05413, 05415, 05417	DN10 - DN50
05416	DN10 - DN150
05418, 05419	DN15 - DN150
05414	DN10 - DN200

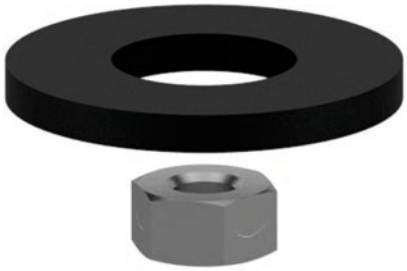

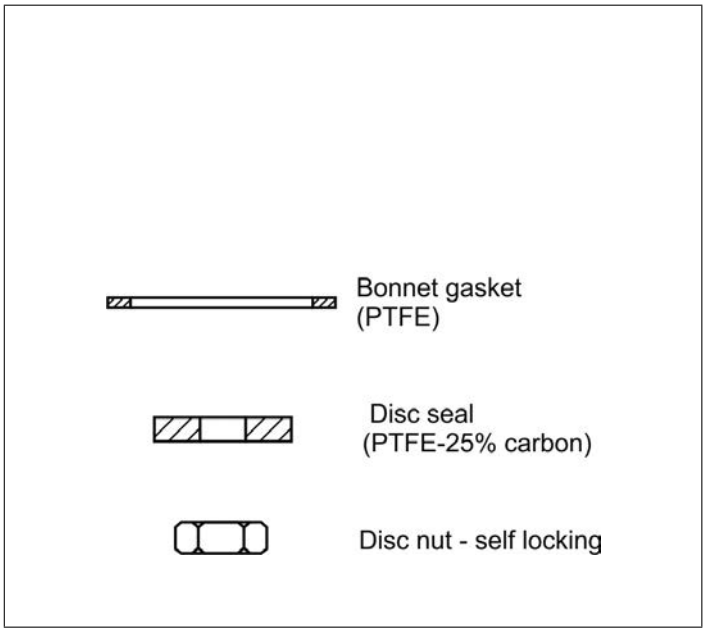

Type 30514	Technical data												
Nominal size	**DN**	**10**	**15**	**20**	**25**	**32**	**40**	**50**	**65**	**80**	**100**	**150**	**200**
Dimension code	.X.	0100	0150	0200	0250	0320	0400	0500	0650	0800	1000	1500	2000
Weight	ca. kg	0.02	0.02	0.03	0.04	0.06	0.07	0.11	0.16	0.22	0.30	0.65	1.79

Dimensions in mm.

Edition 2022-11

Spare Parts for Check Valves

Type 31514 - KEL-F (PCTFE) Disc Sealing spare part kit

for Cryogenic Globe Valves and Check Valves

" cleaned and degreased for oxygen service "

consisting of:
· 2x Bonnet gasket PTFE
· 1x Disc seal KEL-F (PCTFE)
· 1x Disc nut 1.4301

Part No. 31514.X.PCTFE

suitable for disc's for the following types:

Type	Nominal size
05412, 05411, 05413	DN10 - DN50
05416, 05414	DN10 - DN100
05415, 05417	DN10 - DN50
05418, 05419	DN10 - DN150

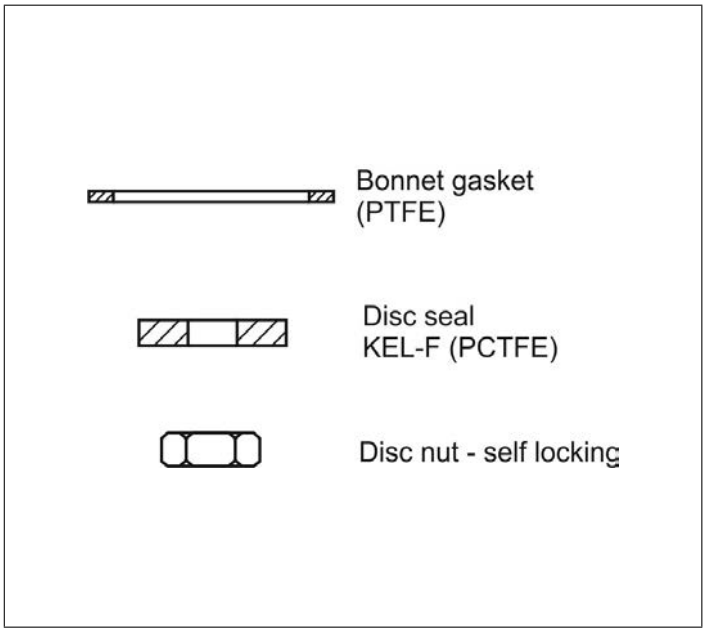

Type 31514	Technical data										
Nominal size	**DN**	**10**	**15**	**20**	**25**	**32**	**40**	**50**	**65**	**80**	**100**
Dimension code	.X.	0100	0150	0200	0250	0320	0400	0500	0650	0800	1000
Weight	ca. kg	0.02	0.02	0.03	0.04	0.06	0.07	0.11	0.16	0.22	0.30

Dimensions in mm.

Strainers
Type 08411 - Strainer

Cryogenic-Strainer, PN50

Bronze body and cap
with strainer screen mesh size 0.25 mm
“cleaned and degreased for oxygen service"

Part No. 08411.X.0001
Male thread for union connection

Available options - on request only:
· other mesh sizes for strainer screen (changed flow coefficient)
· strainer screen in bronze or monel
· sintered filter in bronze or stainless steel in various porosities

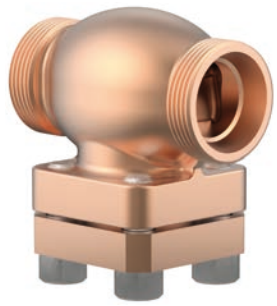

Applications:
Approved for air gases, vapours and cryogenic liquefied gases incl. LNG.
Working temperature: -196°C / -321°F (77K) up to +120°C / +248°F (393K)

Materials		DIN EN	ASTM
1	Body	CC491K	B 62 UNS C83600
2	Strainer screen	1.4301	A 240 Grade 304
3	Bonnet gasket	PTFE	
4	Bolts	1.4301/A2	A 194 B8
5	Cap	CC493K	B 505 UNS C93200

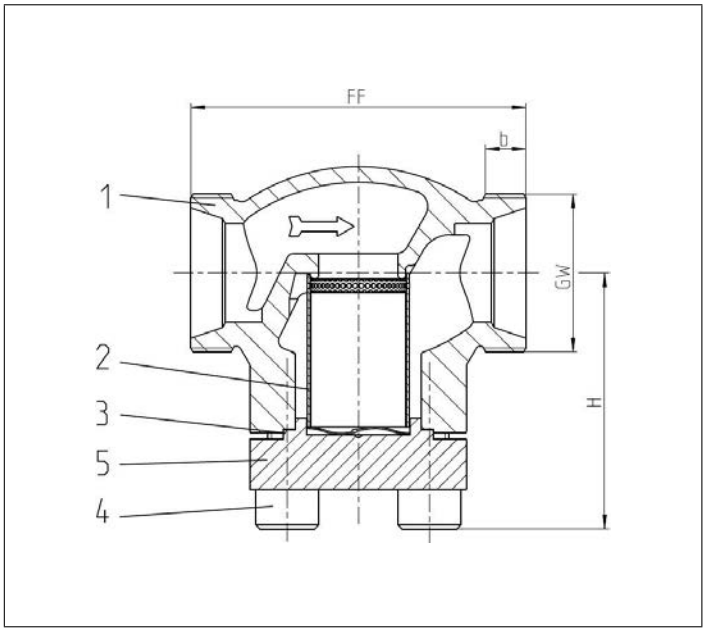

Type 08411 - Standard design	Technical data					
Nominal size	**DN**	**10**	**20**	**32**	**40**	**50**
Dimension code	.X.	0100	0200	0320	0400	0500
Face-to-face dimension	FF	60	85	115	140	160
Height	H	62	65	76	89	89
Union thread	GW	M26x1.5	M40x2.0	M55x2.0	M65x2.0	M78x2.0
Thread length	b	10	11	14	17	20
Weight	ca. kg	0.6	0.9	1.8	3.1	4.7
Kvs - Value	m^3/h	1.5	6.5	14.0	21.0	28.0
Cv - Value	gal/min	1.7	7.5	16.2	24.3	32.4

Dimensions in mm.

Edition 2022-11

Strainers
Type 08411 - Strainer

Cryogenic-Strainer, PN50

Bronze body and cap
with strainer screen mesh size 0.25 mm
“cleaned and degreased for oxygen service"

Part No. 08411.X.0008
Completed with union type braze fittings for copper pipes acc. to DIN EN 12449 or ASTM B88

Available options - on request only:
· other mesh sizes for strainer screen (changed flow coefficient)
· strainer screen in bronze or monel
· sintered filter in bronze or stainless steel in various porosities

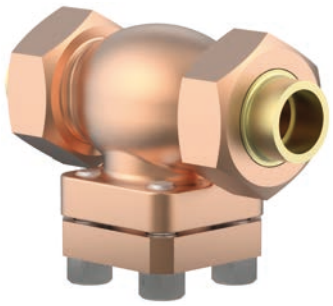

Applications:
Approved for air gases, vapours and cryogenic liquefied gases incl. LNG.
Working temperature: -196°C / -321°F (77K) up to +120°C / +248°F (393K)

Materials		DIN EN	ASTM
1	Body	CC491K	B 62 UNS C83600
2	Strainer screen	1.4301	A 240 Grade 304
3	Bonnet gasket	PTFE	
4	Bolts	1.4301/A2	A 194 B8
5	Cap	CC493K	B 505 UNS C93200
6	Braze fitting	CC493K	B 505 UNS C93200
7	Union nut	CC493K	B 505 UNS C93200

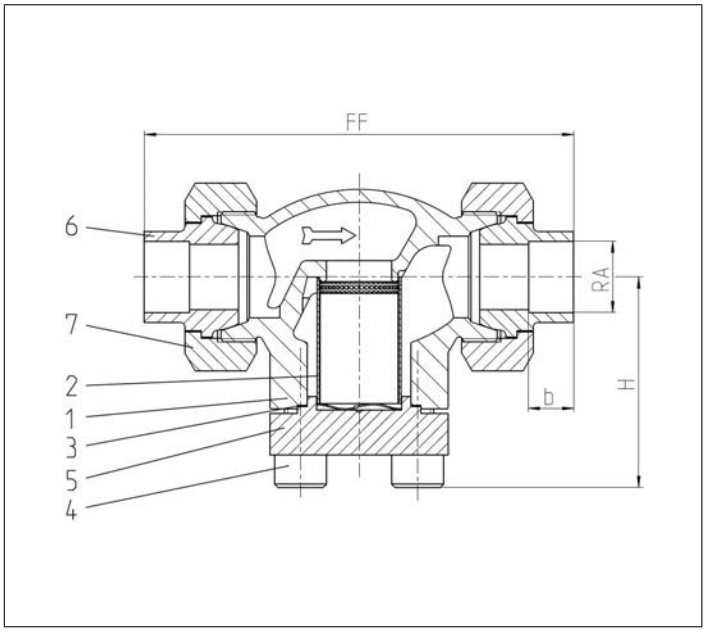

Type 08411 - Standard design	Technical data								
Nominal size	**DN**	**10**	**10**	**15**	**20**	**25**	**32**	**40**	**50**
Dimension code	.X.	1012	1015	1518	2022	2528	3235	4042	5054
Face-to-face dimension	FF	98	98	132	132	171	171	230	230
Height	H	62	62	62	65	69	76	89	89
Outside pipe-Ø	RA	12.0	15.0	18.0	22.0	28.0	35.0	42.0	54.0
Socket depth	b	11	11	14	14	17	17	17	17
Weight	ca. kg	0.6	0.6	0.8	0.9	1.2	1.8	3.1	4.7
Kvs - Value	m^3/h	1.5	1.5	3.4	6.5	9.5	14.0	21.0	28.0
Cv - Value	gal/min	1.7	1.7	3.9	7.5	11.0	16.2	24.3	32.4

Dimensions in mm.

Strainers

Type 08411 - Strainer

Cryogenic-Strainer, PN50

Bronze body and cap
with strainer screen mesh size 0.25 mm
“cleaned and degreased for oxygen service"

Part No. 08411.X.0007
Completed with union type butt weld fittings for stainless steel pipes acc. to ISO 1127 or ASTM A312

Available options - on request only:
· other mesh sizes for strainer screen (changed flow coefficient)
· strainer screen in bronze or monel
· sintered filter in bronze or stainless steel in various porosities
· Further pipe wall thicknesses

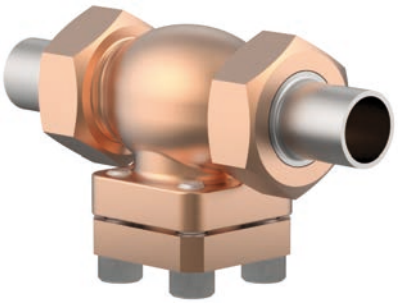

Applications:
Approved for air gases, vapours and cryogenic liquefied gases incl. LNG.
Working temperature: -196°C / -321°F (77K) up to +120°C / +248°F (393K)

Materials		DIN EN	ASTM
1	Body	CC491K	B 62 UNS C83600
2	Strainer screen	1.4301	A 240 Grade 304
3	Bonnet gasket	PTFE	
4	Bolts	1.4301/A2	A 194 B8
5	Cap	CC493K	B 505 UNS C93200
6	Weld fitting	1.4301	A 276 Grade 304
7	Union nut	CC493K	B 505 UNS C93200

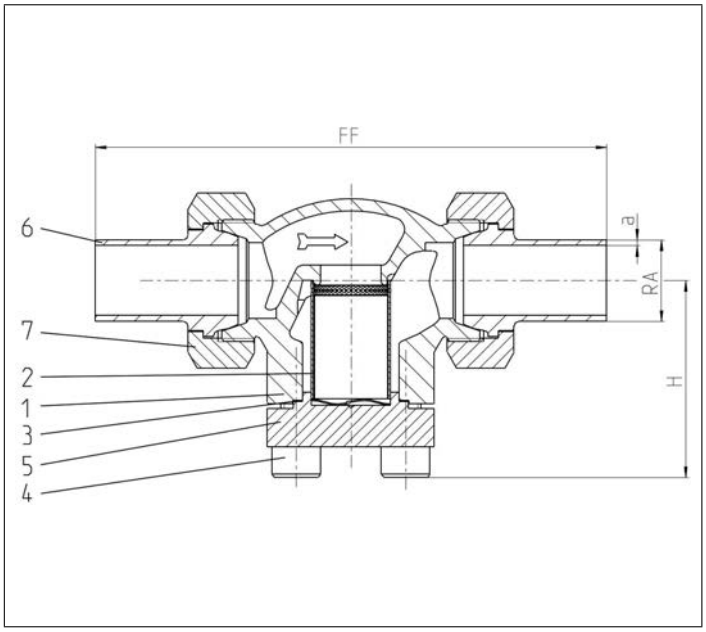

Type 08411 - Standard design	Technical data								
Nominal size	**DN**	**10**	**10**	**20**	**20**	**32**	**32**	**40**	**50**
Dimension code	.X.	1012	1017	1521	2027	2533	3242	4048	5060
Face-to-face dimension	FF	137	141	168	168	203	203	230	263
Outside pipe-Ø ISO 1127	RA	12.0	17.2	21.3	26.9	33.7	42.4	48.3	60.3
Wall thickness pipe ISO 1127	a	1.0	2.3	2.6	2.0	3.2	2.0	3.6	3.6
Outside pipe-Ø ASTM A312	RA	-	17.15	21.34	26.67	33.40	42.16	48.26	60.33
Wall thickness pipe ASTM A312	a	dimensions acc. to S10 or S40							
Height	H	62	62	62	65	69	76	89	89
Weight	ca. kg	0.6	0.6	0.8	0.9	1.2	1.8	3.1	4.7
Kvs - Value	m^3/h	1.6	2.2	6.7	6.7	12.1	12.1	22.6	37.1
Cv - Value	gal/min	1.9	2.6	7.8	7.8	14.1	14.1	26.3	43.2

Dimensions in mm.

Edition 2022-11

Strainers
Type 08412 - Strainer

Cryogenic-Strainer, PN50

Bronze body and cap
with strainer screen mesh size 0.25 mm
“cleaned and degreased for oxygen service"

Part No. 08412.X.0001
Socket end for copper pipes acc. to DIN EN 12449 or ASTM B88

Available options - on request only:
· Socket end for stainless steel pipes acc. to ISO 1127
· other mesh sizes for strainer screen (changed flow coefficient)
· strainer screen in bronze or monel
· sintered filter in bronze or stainless steel in various porosities

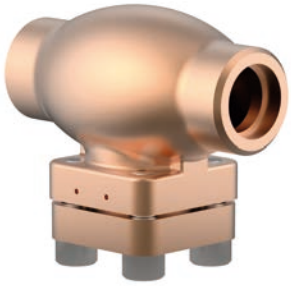

Applications:
Approved for air gases, vapours and cryogenic liquefied gases incl. LNG.
Working temperature: -196°C / -321°F (77K) up to +120°C / +248°F (393K)

Materials		DIN EN	ASTM
1	Body	CC491K	B 62 UNS C83600
2	Strainer screen	1.4301	A 240 Grade 304
3	Bonnet gasket	PTFE	
4	Bolts	1.4301/A2	A 194 B8
5	Cap	CC493K	B 505 UNS C93200

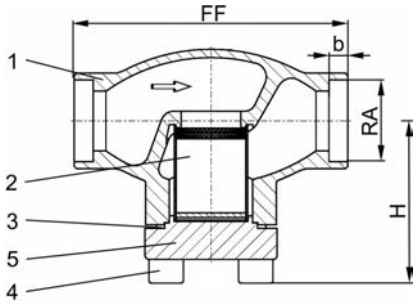

Type 08412 - Standard design	Technical data							
Nominal size	**DN**	**10**	**15**	**20**	**25**	**32**	**40**	**50**
Dimension code	.X.	X=DNRA, Example: valve DN10 for copper pipe RAø12mm, X=1012						
Face-to-face dimension	FF	60	85	85	115	115	140	160
Height	H	62	62	65	69	76	89	89
Outside pipe-Ø	RA	dependent on order						
Socket depth	b	6	6	8	8	10	13	20
Weight	ca. kg	0.6	0.8	0.9	1.2	1.8	3.1	4.7
Kvs-Value	m^3/h	1.5	3.4	6.5	9.5	14.0	21.0	28.0
Cv-Value	gal/min	1.7	3.9	7.5	11.0	16.2	24.3	32.4

Dimensions in mm.

Strainers

Type 08412 - Strainer

Cryogenic-Strainer, PN50 (DN10-25), PN40 (DN32), PN35 (DN40-50)

Bronze body and cap
with strainer screen mesh size 0.25 mm
“cleaned and degreased for oxygen service"

Part No. 08412.X.0008
Complete with brazed copper stubs acc. to DIN EN 12449

Available options - on request only:
· other mesh sizes for strainer screen (changed flow coefficient)
· strainer screen in bronze or monel
· sintered filter in bronze or stainless steel in various porosities

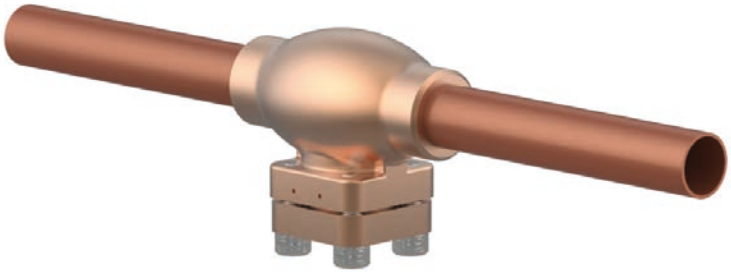

Applications:
Approved for air gases, vapours and cryogenic liquefied gases incl. LNG.
Working temperature: -196°C / -321°F (77K) up to +120°C / +248°F (393K)

Materials		DIN EN	ASTM
1	Body	CC491K	B 62 UNS C83600
2	Strainer screen	1.4301	A 240 Grade 304
3	Bonnet gasket	PTFE	
4	Bolts	1.4301/A2	A 194 B8
5	Cap	CC493K	B 505 UNS C93200
6	Copper stubs	CW024A	B 152 UNS C12200

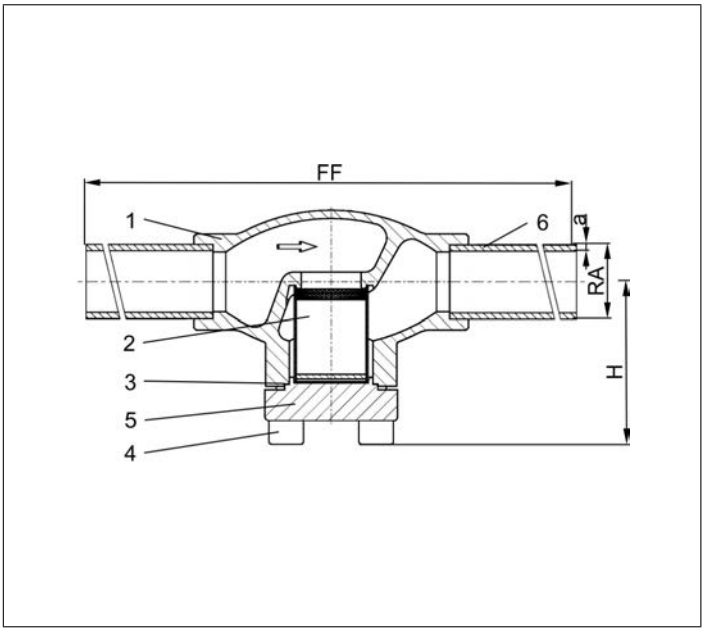

Type 08412 - Standard design	Technical data								
Nominal size	**DN**	**10**	**15**	**15**	**20**	**25**	**32**	**40**	**50**
Dimension code	.X.	1012	1515	1518	2022	2528	3235	4042	5054
Face-to-face dimension	FF	360	385	385	385	415	415	440	460
Height	H	62	62	62	65	69	76	89	89
Outside pipe-Ø	RA	12.0	15.0	18.0	22.0	28.0	35.0	42.0	54.0
Wall thickness pipe	a	1.0	1.5	1.5	1.5	1.5	1.5	1.5	2.0
Weight	ca. kg	0.75	1.0	1.0	1.2	1.8	2.5	4.1	6.0
Kvs-Value	m^3/h	1.5	3.4	3.4	6.5	9.5	14.0	21.0	28.0
Cv-Value	gal/min	1.7	3.9	3.9	7.5	11.0	16.2	24.3	32.4

Dimensions in mm.

Edition 2022-11

Strainers
Type 08412 - Strainer

Cryogenic-Strainer, PN50

Bronze body and cap
with strainer screen mesh size 0.25 mm
“cleaned and degreased for oxygen service"

Part No. 08412.X.0007
Complete with brazed stainless steel stubs acc. to DIN EN 10216-5 or ASTM A312

Available options - on request only:
· other mesh sizes for strainer screen (changed flow coefficient)
· strainer screen in bronze or monel
· sintered filter in bronze or stainless steel in various porosities
· Further pipe wall thicknesses

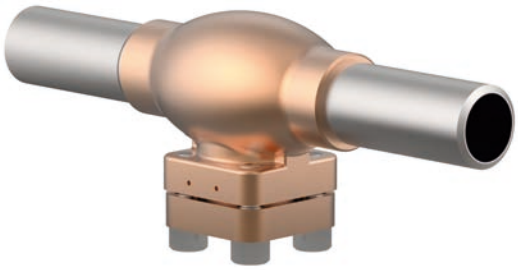

Applications:
Approved for air gases, vapours and cryogenic liquefied gases incl. LNG.
Working temperature: -196°C / -321°F (77K) up to +120°C / +248°F (393K)

Materials		DIN EN	ASTM
1	Body	CC491K	B 62 UNS C83600
2	Strainer screen	1.4301	A 240 Grade 304
3	Bonnet gasket	PTFE	
4	Bolts	1.4301/A2	A 194 B8
5	Cap	CC493K	B 505 UNS C93200
6	Stainless steel stubs	1.4306	A 312 TP304L

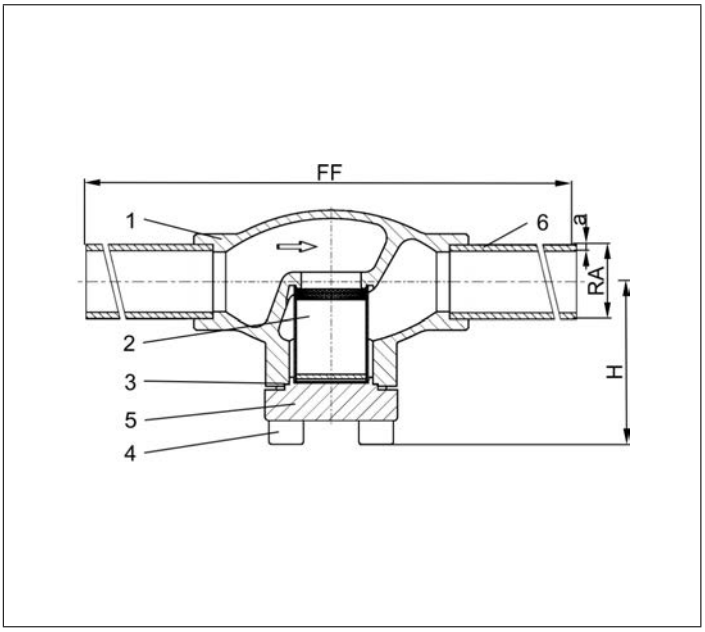

Type 08412 - Standard design	Technical data								
Nominal size	**DN**	**10**	**10**	**15**	**20**	**25**	**32**	**40**	**50**
Dimension code	.X.	1012	1017	1521	2027	2533	3242	4048	5060
Face-to-face dimension	FF	210	210	235	235	265	265	290	310
Height	H	62	62	62	65	69	76	89	89
Outside pipe-Ø ISO 1127	RA	12.0	17.2	21.3	26.9	33.7	42.4	48.3	60.3
Wall thickness pipe ISO 1127	a	1.0	2.3	2.6	2.9	3.2	3.2	3.6	3.6
Outside pipe-Ø ASTM A312	RA	-	17.15	21.34	26.67	33.4	42.16	48.26	60.33
Wall thickness pipe ASTM A312	a	dimensions acc. to S10 or S40							
Weight	ca. kg	0.75	0.75	1.0	1.2	1.8	2.5	4.1	6.0
Kvs-Value	m^3/h	1.5	1.5	3.4	6.5	9.5	14.0	21.0	28.0
Cv-Value	gal/min	1.7	1.7	3.9	7.5	11.0	16.2	24.3	32.4

Dimensions in mm.

Strainers

Type 08413 - Strainer

Cryogenic-Strainer, PN50

Bronze body and cap
with strainer screen mesh size 0.25 mm
“cleaned and degreased for oxygen service"

Part No. 08413.X.0001
Female thread connection (G) acc. to ISO 228/1

Part No. 08413.X.0006
Female thread connection NPT acc. to ANSI B 1.20.1

Available options - on request only:
· Female thread connection (R) acc. to ISO 7-Rc
· other mesh sizes for strainer screen (changed flow coefficient)
· strainer screen in bronze or monel
· sintered filter in bronze or stainless steel in various porosities

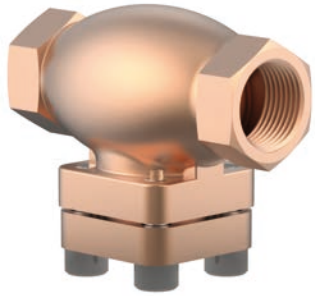

Applications:
Approved for air gases, vapours and cryogenic liquefied gases incl. LNG.
Working temperature: -196°C / -321°F (77K) up to +120°C / +248°F (393K)

Materials		DIN EN	ASTM
1	Body	CC491K	B 62 UNS C83600
2	Strainer screen	1.4301	A 240 Grade 304
3	Bonnet gasket	PTFE	
4	Bolts	1.4301/A2	A 194 B8
5	Cap	CC493K	B 505 UNS C93200

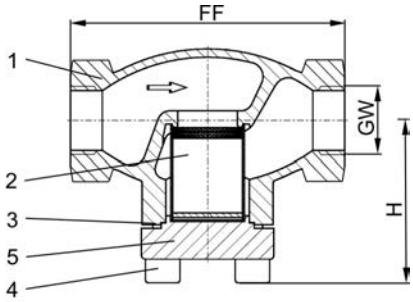

Type 08413 - Standard design	Technical data								
Nominal size	**DN**	**10**	**10**	**15**	**20**	**25**	**32**	**40**	**50**
Thread size	GW	1/4	3/8	1/2	3/4	1	1-1/4	1-1/2	2
Dimension code	.X.	0200	0300	0400	0600	1000	1200	1400	2000
Face-to-face dimension	FF	60	60	85	85	115	115	140	160
Height	H	62	62	62	65	69	76	89	89
Weight	ca. kg	0.6	0.6	0.8	0.9	1.2	1.8	3.1	4.7
Kvs-Value	m^3/h	1.5	1.5	3.4	6.5	9.5	14.0	21.0	28.0
Cv-Value	gal/min	1.7	1.7	3.9	7.5	11.0	16.2	24.3	32.4

Dimensions in mm.

Edition 2022-11

Type 08414 - Strainer

Cryogenic-Strainer, PN50 (DN65=PN45, DN150=PN40)

Stainless steel body and bronze cap
with strainer screen mesh size 0.25 mm
“cleaned and degreased for oxygen service"

Part No. 08414.X.000*
* Butt weld connection for stainless steel pipes acc. to ISO 1127 or ASTM A312

Part No. 08414.X.0004
Socket weld connection for stainless steel pipes acc. to ISO 1127 or ASTM A312

Available options - on request only:
· Welded stainless steel stubs acc. to ISO 1127 or ASTM A312 - length FF + 200mm
· other mesh sizes for strainer screen (changed flow coefficient)
· strainer screen in bronze or monel
· sintered filter in bronze or stainless steel in various porosities

Applications:
Approved for air gases, vapours and cryogenic liquefied gases incl. LNG.
Working temperature: -196°C / -321°F (77K) up to +120°C / +248°F (393K)

Materials		DIN EN	ASTM
1	Body	1.4308	A 351 CF8
2	Strainer screen	1.4301	A 240 Grade 304
3	Bonnet gasket	PTFE	
4	Bolts	1.4301/A2	A 194 B8
5	Cap	CC493K	B 505 UNS C93200

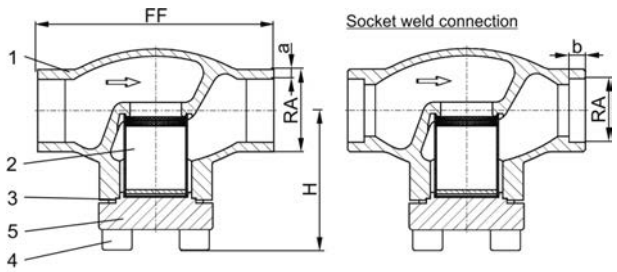

Type 08414 - Standard design	Technical data													
Nominal size	**DN**	**10**	**15**	**15**	**20**	**25**	**32**	**40**	**40**	**50**	**65**	**80**	**100**	**150**
Dimension code	.X.	1012	1517	1521	2026	2533	3238	4042	4048	5060	657x	8088	0114	0168
Face-to-face dimension	FF	70	85	85	100	115	115	130	130	155	205	245	280	400
Height	H	62	62	62	65	69	76	89	89	89	125	150	166	215
Outside pipe-Ø ISO 1127	RA	12.0	17.2	21.3	26.9	33.7	38.0	42.4	48.3	60.3	76.1	88.9	114.3	168.3
Wall thickness pipe ISO 1127	a	1.0	1.6	2.0	2.0	2.0	2.0	2.0	2.0	2.0	2.9	3.2	6.0	7.1
Outside pipe-Ø ASTM A312	RA	13.72	17.15	21.34	26.67	33.40	-	42.16	48.26	60.33	73.03	88.90	114.3	168.3
Wall thickness pipe ASTM A312	a	dimensions acc. to S10 or S40												
Socket depth	b	6	10	10	13	13	-	13	13	16	16	16	20	20
Weight	ca. kg	0.6	0.75	0.8	0.9	1.2	1.8	3.1	3.1	4.7	8.9	13.6	18.0	48.0
Kvs-Value	m^3/h	1.5	3.4	3.4	6.5	9.5	14.0	19.0	21.0	28.0	62.0	90.0	118.0	300.0
Cv-Value	gal/mi	1.7	3.9	3.9	7.5	11.0	16.2	22.0	24.3	32.4	72.3	105.0	137.7	350.1

Dimensions in mm.

Strainers

Type 08415 - Strainer

Cryogenic-Strainer, PN50

Stainless steel body and bronze cap
with strainer screen mesh size 0.25 mm
“cleaned and degreased for oxygen service"

Part No. 08415.X.0001
Female thread connection (G) acc. to ISO 228/1

Part No. 08415.X.0006
Female thread connection NPT acc. to ANSI B 1.20.1

Available options - on request only:
· Female thread connection (R) acc. to ISO 7-Rc
· other mesh sizes for strainer screen (changed flow coefficient)
· strainer screen in bronze or monel
· sintered filter in bronze or stainless steel in various porosities

Applications:
Approved for air gases, vapours and cryogenic liquefied gases incl. LNG.
Working temperature: -196°C / -321°F (77K) up to +120°C / +248°F (393K)

Materials		DIN EN	ASTM
1	Body	1.4308	A 351 CF8
2	Sieb	1.4301	A 240 Grade 304
3	Bonnet gasket	PTFE	
4	Capschrauben	1.4301/A2	A 194 B8
5	Cap	CC493K	B 505 UNS C93200

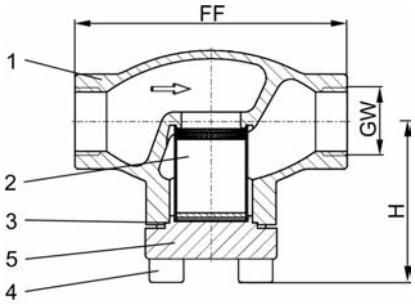

Type 08415 - Standard design	Technical data								
Nominal size	**DN**	**10**	**10**	**15**	**20**	**25**	**40**	**40**	**50**
Thread size	GW	1/4	3/8	1/2	3/4	1	1-1/4	1-1/2	2
Dimension code	.X.	0200	0300	0400	0600	1000	1200	1400	2000
Face-to-face dimension	FF	70	70	85	100	115	130	130	155
Height	H	62	62	62	65	69	89	89	89
Weight	ca. kg	0.6	0.6	0.8	0.9	1.2	3.1	3.1	4.7
Kvs-Value	m^3/h	1.5	1.5	3.4	6.5	9.5	19.0	21.0	28.0
Cv-Value	gal/min	1.7	1.7	3.9	7.5	11.0	22.0	24.3	32.4

Dimensions in mm.

Edition 2022-11

Type 08431 - Strainer, DIN EN Flanges

Cryogenic-Strainer, PN40

Stainless steel body and bronze cap
with strainer screen mesh size 0.25 mm
“cleaned and degreased for oxygen service"

Part No. 08431.X.0002
Flanged connection acc. to DIN EN 1092-1 PN40

Available options - on request only:
· other mesh sizes for strainer screen (changed flow coefficient)
· strainer screen in bronze or monel
· sintered filter in bronze or stainless steel in various porosities

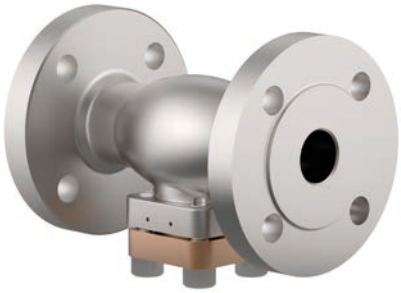

Applications:
Approved for air gases, vapours and cryogenic liquefied gases incl. LNG.
Working temperature: -196°C / -321°F (77K) up to +120°C / +248°F (393K)

Materials		DIN EN	ASTM
1	Body	1.4308	A 351 CF8
2	Strainer screen	1.4301	A 240 Grade 304
3	Bonnet gasket	PTFE	
4	Bolts	1.4301/A2	A 194 B8
5	Cap	CC493K	B 505 UNS C93200

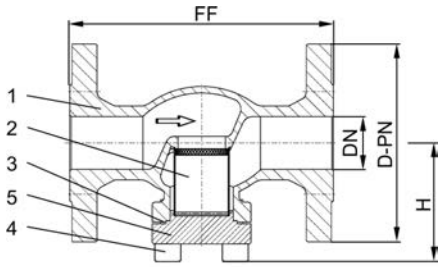

Type 08431 - Standard design	Technical data									
Nominal size	**DN**	**15**	**20**	**25**	**40**	**50**	**65**	**80**	**100**	**150**
Dimension code - Flange EN 1092-1 PN40	.X.	0150	0200	0250	0400	0500	0650	0800	1000	1500
Flange-Ø	D-PN	95	105	115	150	165	185	200	235	300
Face-to-face dimension	FF	140	150	160	200	230	290	310	350	550
Height	H	62	69	69	89	89	125	150	166	212
Weight	ca. kg	2.5	3.0	4.0	8.1	10.6	17.7	23.2	36.8	68.1
Kvs-Value	m^3/h	4.3	6.7	9.5	21.0	28.0	62.0	90.0	118.0	on request
Cv-Value	gal/min	5.0	7.8	11.0	24.3	32.4	72.3	105.0	137.7	on request

Dimensions in mm.

Strainers

Type 08431 - Strainer, ANSI Flanges

Cryogenic-Strainer, class 300

Stainless steel body and bronze cap
with strainer screen mesh size 0.25 mm
“cleaned and degreased for oxygen service"

Part No. 08431.X.0003
Flanged connection acc. to ANSI B16.5 class 300

Available options - on request only:
· other mesh sizes for strainer screen (changed flow coefficient)
· strainer screen in bronze or monel
· sintered filter in bronze or stainless steel in various porosities

Applications:
Approved for air gases, vapours and cryogenic liquefied gases incl. LNG.
Working temperature: -196°C / -321°F (77K) up to +120°C / +248°F (393K)

Materials		DIN EN	ASTM
1	Body	1.4308	A 351 CF8
2	Strainer screen	1.4301	A 240 Grade 304
3	Bonnet gasket	PTFE	
4	Bolts	1.4301/A2	A 194 B8
5	Cap	CC493K	B 505 UNS C93200

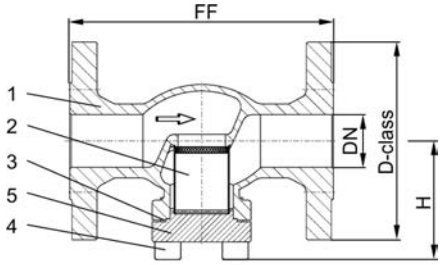

Type 08431 - Standard design	Technical data									
Nominal size	**DN**	**15**	**20**	**25**	**40**	**50**	**65**	**80**	**100**	**150**
Dimension code - Flange ANSI B16.5 class 300	.X.	0400	0600	1000	1400	2000	2400	3000	4000	6000
Flange-Ø	D-class	95	115	125	155	165	190	210	255	320
Face-to-face dimension	FF	140	150	160	200	230	290	310	350	597
Height	H	62	69	69	89	89	125	150	166	212
Weight	ca. kg	2.5	3.0	4.0	8.1	10.6	17.7	23.2	36.8	85.7
Kvs-Value	m^3/h	4.3	6.7	9.5	21.0	28.0	62.0	90.0	118.0	on request
Cv-Value	gal/min	5.0	7.8	11.0	24.3	32.4	72.3	105.0	137.7	on request

Dimensions in mm.

Edition 2022-11

Type 08431 - Strainer, ANSI Flanges

Cryogenic-Strainer, class 150

Stainless steel body and bronze cap
with strainer screen mesh size 0.25 mm
“cleaned and degreased for oxygen service"

Part No. 08431.X.0001 Flanged connection acc. to ANSI B16.5 class 150

Available options - on request only:
· other mesh sizes for strainer screen (changed flow coefficient)
· strainer screen in bronze or monel
· sintered filter in bronze or stainless steel in various porosities

Applications:
Approved for air gases, vapours and cryogenic liquefied gases incl. LNG.
Working temperature: -196°C / -321°F (77K) up to +120°C / +248°F (393K)

Materials		DIN EN	ASTM
1	Body	1.4308	A 351 CF8
2	Strainer screen	1.4301	A 240 Grade 304
3	Bonnet gasket	PTFE	
4	Bolts	1.4301/A2	A 194 B8
5	Cap	CC493K	B 505 UNS C93200

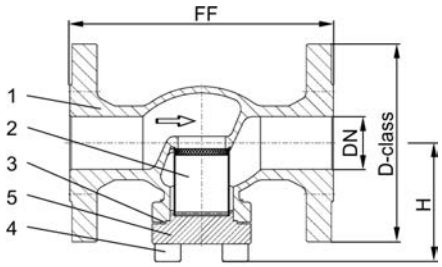

Type 08431 - Standard design	Technical data									
Nominal size	**DN**	**15**	**20**	**25**	**40**	**50**	**65**	**80**	**100**	**150**
Dimension code - Flange ANSI B16.5 class 150	.X.	0400	0600	1000	1400	2000	2400	3000	4000	6000
Flange-Ø	D-class	90	100	110	125	150	180	190	230	280
Face-to-face dimension	FF	140	150	160	200	230	290	310	350	577
Height	H	62	69	69	89	89	125	150	166	212
Weight	ca. kg	2.5	3.0	4.0	8.1	10.6	17.7	23.2	36.8	76.9
Kvs-Value	m^3/h	4.3	6.7	9.5	21.0	28.0	62.0	90.0	118.0	on request
Cv-Value	gal/min	5.0	7.8	11.0	24.3	32.4	71.7	104.0	136.4	on request

Dimensions in mm.

Strainers

Type 08417 - Strainer

Cryogenic-Strainer, PN50 (DN65=PN45, DN150=PN40)

Stainless steel body and cap
with strainer screen mesh size 0.25 mm
“cleaned and degreased for oxygen service"

Part No. 08417.X.000*
* Butt weld connection for stainless steel pipes acc. to ISO 1127 or ASTM A312

Part No. 08417.X.0004
Socket weld connection for stainless steel pipes acc. to ISO 1127 or ASTM A312

Available options - on request only:
· Welded stainless steel stubs acc. to ISO 1127 or ASTM A312 - length FF + 200mm
· other mesh sizes for strainer screen (changed flow coefficient)
· strainer screen in bronze or monel
· sintered filter in bronze or stainless steel in various porosities

Applications:
Approved for air gases, vapours and cryogenic liquefied gases incl. LNG.
Working temperature: -196°C / -321°F (77K) up to +120°C / +248°F (393K)

Materials		DIN EN	ASTM
1	Body	1.4308	A 351 CF8
2	Strainer screen	1.4301	A 240 Grade 304
3	Bonnet gasket	PTFE	
4	Bolts	1.4301/A2	A 194 B8
5	Cap	1.4301	A 276 Grade 304

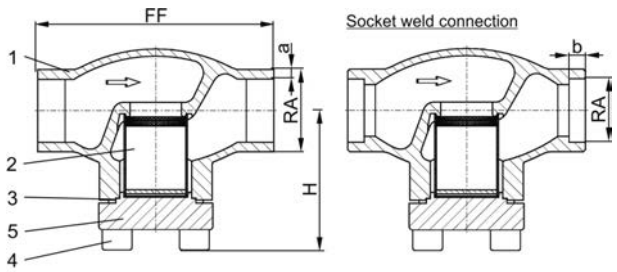

Type 08417 - Standard design	Technical data													
Nominal size	**DN**	**10**	**15**	**15**	**20**	**25**	**32**	**40**	**40**	**50**	**65**	**80**	**100**	**150**
Dimension code	.X.	1012	1517	1521	2026	2533	3238	4042	4048	5060	657x	8088	0114	0168
Face-to-face dimension	FF	70	85	85	100	115	115	130	130	155	205	245	280	400
Height	H	62	62	62	65	69	76	89	89	89	125	150	166	215
Outside pipe-Ø ISO 1127	RA	12.0	17.2	21.3	26.9	33.7	38.0	42.4	48.3	60.3	76.1	88.9	114.3	168.3
Wall thickness pipe ISO 1127	a	1.0	1.6	2.0	2.0	2.0	2.0	2.0	2.0	2.0	2.9	3.2	6.0	7.1
Outside pipe-Ø ASTM A312	RA	13.72	17.15	21.34	26.67	33.40	-	42.16	48.26	60.33	73.03	88.90	114.3	168.3
Wall thickness pipe ASTM A312	a	dimensions acc. to S10 or S40												
Socket depth	b	6	10	10	13	13	-	13	13	16	16	16	20	20
Weight	ca. kg	0.6	0.75	0.8	0.9	1.2	1.8	3.1	3.1	4.7	8.9	13.6	18.0	48.0
Kvs-Value	m^3/h	1.5	3.4	3.4	6.5	9.5	14.0	19.0	21.0	28.0	62.0	90.0	126.0	289.0
Cv-Value	gal/mi	1.7	3.9	3.9	7.5	11.0	16.2	22.0	24.3	32.4	72.3	105.0	145.7	334.1

Dimensions in mm.

Edition 2022-11

Type 08417 - Strainer

Cryogenic-Strainer, PN25

Stainless steel body and cap
with strainer screen mesh size 0.25 mm

Part No. 08417.0219.0004
Socket weld connection for stainless steel pipes acc. to ISO 1127 or ASTM A312

Available options - on request only

Applications:
Approved for air gases, vapours and cryogenic liquefied gases incl. LNG.
Working temperature: -196°C / -321°F (77K) up to +120°C / +248°F (393K)

Materials		DIN EN	ASTM
1	Body	1.4308	A 351 CF8
2	Strainer screen	1.4301	A 240 Grade 304
3	Bonnet gasket	PTFE	
4	Bolts	1.4301/A2	A 194 B8
5	Cap	1.4301	A 276 Grade 304

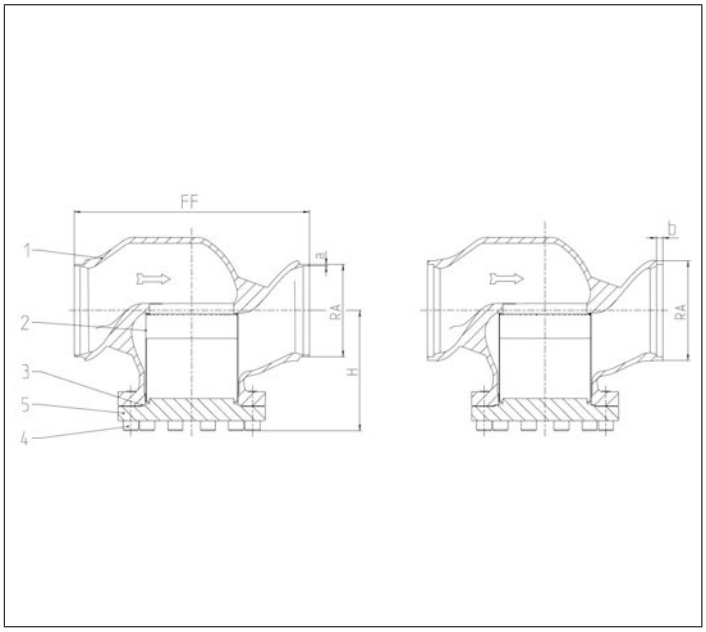

Type 08417 - Standard design	Technical data	
Nominal size	**DN**	**200**
Dimension code	.X.	0219
Face-to-face dimension	FF	560
Height	H	285
Outside pipe-Ø ISO 1127	RA	219.1
Wall thickness pipe ISO 1127	a	6.3
Outside pipe-Ø ASTM A312	RA	219.1
Wall thickness pipe ASTM A312	a	dimensions acc. to S10 or S40
Socket depth	b	15
Weight	ca. kg	100
Kvs-Value	m^3/h	468
Cv-Value	gal/min	541.1

Dimensions in mm.

Strainers

Type 08416 - Strainer

Cryogenic-Strainer, PN50

Stainless steel body and cap
with strainer screen mesh size 0.25 mm
“cleaned and degreased for oxygen service"

Part No. 08416.X.0001
Female thread connection (G) acc. to ISO 228/1

Part No. 08416.X.0006
Female thread connection NPT acc. to ANSI B 1.20.1

Available options - on request only:
· Female thread connection (R) acc. to ISO 7-Rc
· other mesh sizes for strainer screen (changed flow coefficient)
· strainer screen in bronze or monel
· sintered filter in bronze or stainless steel in various porosities

Applications:
Approved for air gases, vapours and cryogenic liquefied gases incl. LNG.
Working temperature: -196°C / -321°F (77K) up to +120°C / +248°F (393K)

Materials		DIN EN	ASTM
1	Body	1.4308	A 351 CF8
2	Strainer screen	1.4301	A 240 Grade 304
3	Bonnet gasket	PTFE	
4	Bolts	1.4301/A2	A 194 B8
5	Cap	1.4301	A 276 Grade 304

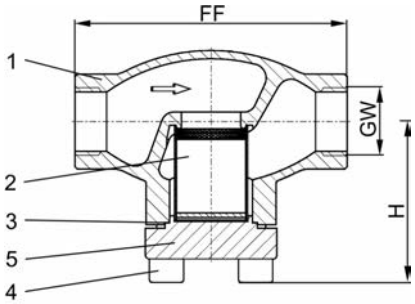

Type 08416 - Standard design	Technical data								
Nominal size	**DN**	**10**	**10**	**15**	**20**	**25**	**40**	**40**	**50**
Thread size	GW	1/4	3/8	1/2	3/4	1	1-1/4	1-1/2	2
Dimension code	.X.	0200	0300	0400	0600	1000	1200	1400	2000
Face-to-face dimension	FF	70	70	85	100	115	130	130	155
Height	H	62	62	62	65	69	89	89	89
Weight	ca. kg	0.6	0.6	0.8	0.9	1.2	3.1	3.1	4.7
Kvs-Value	m^3/h	1.5	1.5	3.4	6.5	9.5	19.0	21.0	28.0
Cv-Value	gal/min	1.7	1.7	3.9	7.5	11.0	22.0	24.3	32.4

Dimensions in mm.

Edition 2022-11

Type 08432 - Strainer, DIN EN Flanges

Cryogenic-Strainer, PN40

Stainless steel body and cap
with strainer screen mesh size 0.25 mm
“cleaned and degreased for oxygen service"

Part No. 08432.X.0002
Flanged connection acc. to DIN EN 1092-1 PN40

Available options - on request only:
· other mesh sizes for strainer screen (changed flow coefficient)
· strainer screen in bronze or monel
· sintered filter in bronze or stainless steel in various porosities

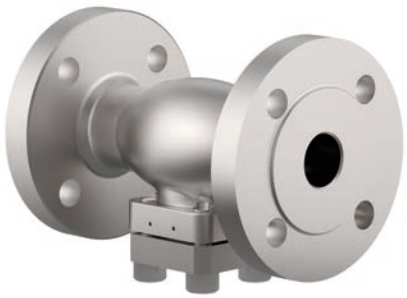

Applications:
Approved for air gases, vapours and cryogenic liquefied gases incl. LNG.
Working temperature: -196°C / -321°F (77K) up to +120°C / +248°F (393K)

Materials		DIN EN	ASTM
1	Body	1.4308	A 351 CF8
2	Strainer screen	1.4301	A 240 Grade 304
3	Bonnet gasket	PTFE	
4	Bolts	1.4301/A2	A 194 B8
5	Cap	1.4301	A 276 Grade 304

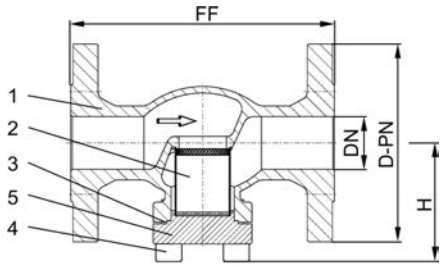

Type 08432 - Standard design	Technical data									
Nominal size	**DN**	**15**	**20**	**25**	**40**	**50**	**65**	**80**	**100**	**150**
Dimension code - Flange EN 1092-1 PN40	.X.	0150	0200	0250	0400	0500	0650	0800	1000	1500
Flange-Ø	D-PN	95	105	115	150	165	185	200	235	300
Face-to-face dimension	FF	140	150	160	200	230	290	310	350	550
Height	H	62	69	69	89	89	125	150	166	212
Weight	ca. kg	2.5	3.0	4.0	5.6	10.6	17.7	23.2	36.8	68.1
Kvs-Value	m^3/h	4.3	6.7	9.5	21.0	28.0	62.0	90.0	118.0	on request
Cv-Value	gal/min	5.0	7.8	11.0	24.3	32.4	72.3	105.0	137.7	on request

Dimensions in mm.

Type 08432 - Strainer, ANSI Flanges

Cryogenic-Strainer, class 300

Stainless steel body and cap
with strainer screen mesh size 0.25 mm
“cleaned and degreased for oxygen service"

Part No. 08432.X.0003
Flanged connection acc. to ANSI B16.5 class 300

Available options - on request only:
· other mesh sizes for strainer screen (changed flow coefficient)
· strainer screen in bronze or monel
· sintered filter in bronze or stainless steel in various porosities

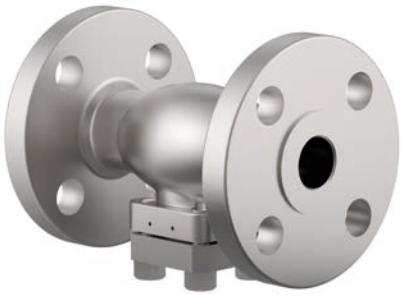

Applications:
Approved for air gases, vapours and cryogenic liquefied gases incl. LNG.
Working temperature: -196°C / -321°F (77K) up to +120°C / +248°F (393K)

Materials		DIN EN	ASTM
1	Body	1.4308	A 351 CF8
2	Strainer screen	1.4301	A 240 Grade 304
3	Bonnet gasket	PTFE	
4	Bolts	1.4301/A2	A 194 B8
5	Cap	1.4301	A 276 Grade 304

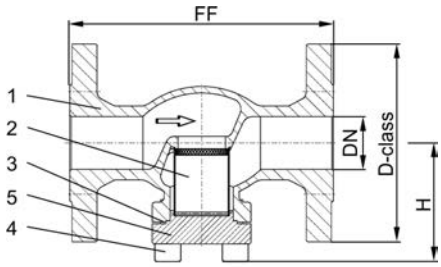

Type 08432 - Standard design	Technical data									
Nominal size	**DN**	**15**	**20**	**25**	**40**	**50**	**65**	**80**	**100**	**150**
Dimension code - Flange ANSI B16.5 class 300	.X.	0400	0600	1000	1400	2000	2400	3000	4000	6000
Flange-Ø	D-class	95	115	125	155	165	190	210	255	320
Face-to-face dimension	FF	140	150	160	200	230	290	310	350	597
Height	H	62	69	69	89	89	125	150	166	212
Weight	ca. kg	2.5	3.0	4.0	5.6	10.6	17.7	23.2	36.8	85.7
Kvs-Value	m^3/h	4.3	6.7	9.5	21.0	28.0	62.0	90.0	118.0	on request
Cv-Value	gal/min	5.0	7.8	11.0	24.3	32.4	72.3	105.0	137.7	on request

Dimensions in mm.

Edition 2022-11

Type 08432 - Strainer, ANSI Flanges

Cryogenic-Strainer, class 150

Stainless steel body and cap
with strainer screen mesh size 0.25 mm
“cleaned and degreased for oxygen service"

Part No. 08432.X.0001
Flanged connection acc. to ANSI B16.5 class 150

Available options - on request only:
· other mesh sizes for strainer screen (changed flow coefficient)
· strainer screen in bronze or monel
· sintered filter in bronze or stainless steel in various porosities

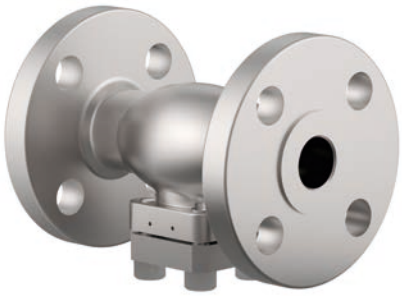

Applications:
Approved for air gases, vapours and cryogenic liquefied gases incl. LNG.
Working temperature: -196°C / -321°F (77K) up to +120°C / +248°F (393K)

Materials		DIN EN	ASTM
1	Body	1.4308	A 351 CF8
2	Strainer screen	1.4301	A 240 Grade 304
3	Bonnet gasket	PTFE	
4	Bolts	1.4301/A2	A 194 B8
5	Cap	1.4301	A 276 Grade 304

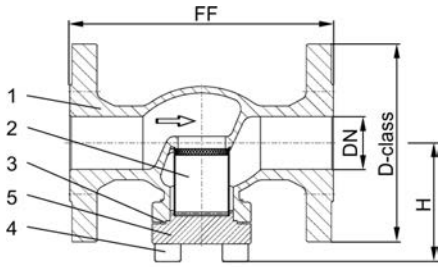

Type 08432 - Standard design	Technical data									
Nominal size	**DN**	**15**	**20**	**25**	**40**	**50**	**65**	**80**	**100**	**150**
Dimension code - Flange ANSI B16.5 class 150	.X.	0400	0600	1000	1400	2000	2400	3000	4000	6000
Flange-Ø	D-class	90	100	110	125	150	180	190	230	280
Face-to-face dimension	FF	140	150	160	200	230	290	310	350	577
Height	H	62	69	69	89	89	125	150	166	212
Weight	ca. kg	2.5	3.0	4.0	5.6	10.6	17.7	23.2	36.8	76.9
Kvs-Value	m^3/h	4.3	6.7	9.5	21.0	28.0	62.0	90.0	118.0	on request
Cv-Value	gal/min	5.0	7.8	11.0	24.3	32.4	72.3	105.0	137.7	on request

Dimensions in mm.

Spare Parts for Strainers

Type 30800, Type 30801 - Strainer screen, Filter

for Cryogenic-Strainer
" cleaned and degreased for oxygen service "

consisting of:
· 1x Strainer screen or Filter (materials see above)
· 1x Spring ring (1.4568)
· 1x Bonnet gasket (PTFE)

Available options - on request only:
· Further mesh sizes / porosities

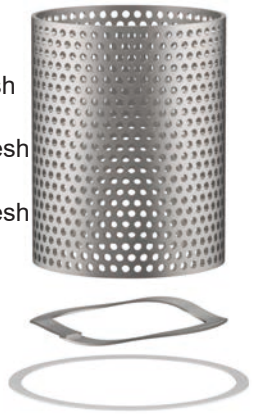

Part No. 30800.X.0250A2
Stainless steel strainer screen (1.4301 / A 240 Grade 304) with a mesh size of 0.25 mm or rather 56 mesh
Part No. 30800.X.0100A2
Stainless steel strainer screen (1.4301 / A 240 Grade 304) with a mesh size of 0.10 mm or rather 140 mesh
Part No. 30800.X.0250A4
Stainless steel strainer screen (1.4404 / A 276 Grade 316L) with a mesh size of 0.25 mm or rather 56 mesh
Part No. 30800.X.0250M
Monel strainer screen (2.4360 / SB 164 - N04400) with a mesh size of 0.25 mm or rather 56 mesh
Part No. 30800.X.0150M
Monel strainer screen (2.4360 / SB 164 - N04400) with a mesh size of 0.15 mm or rather 100 mesh
Part No. 30801.X.0100B
Sintered bronze Filter (CW483K / B 427 C 90800) with a porosity of 100 µ
Part No. 30801.X.0030B
Sintered bronze Filter (CW483K / B 427 C 90800) with a porosity of 30 µ

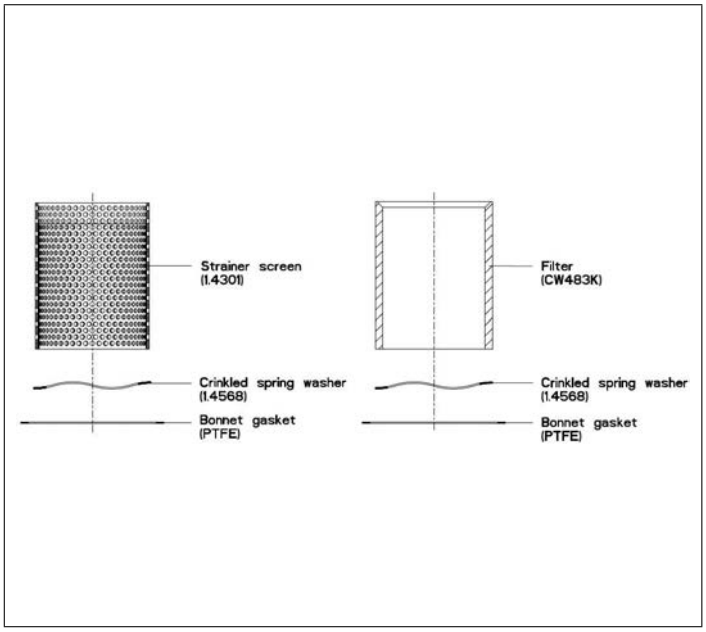

suitable for:

Type	Nominal size
08412, 08413, 08415, 08416, 08716	DN10 - DN50
08414, 08417	DN10 - DN200
08431, 08432	DN25 - DN100
08717	DN10 - DN150

Type 30800, 30801	Technical Data												
Nominal size	**DN**	**10**	**15**	**20**	**25**	**32**	**40**	**50**	**65**	**80**	**100**	**150**	**200**
Dimension code	.X.	0100	0150	0200	0250	0320	0400	0500	0650	0800	1000	1500	2000
Weight	ca. kg	0.03	0.03	0.04	0.05	0.07	0.08	0.13	0.18	0.24	0.32	0.68	0.92
Kvs - Value MS 0.25	m^3/h	2.8	3.6	6.4	9.0	14.5	21.0	30.0	56.0	85.0	115.0	o.r.	o.r.
Cv - Value MS 0.25	gal/min	3.2	4.1	7.4	10.4	16.8	24.3	34.8	64.9	98.6	133.4	o.r.	o.r.
Kvs - Value MS 0.15	m^3/h	2.8	3.6	6.4	9.0	o.r.	21.0	29.5	o.r.	o.r.	o.r.	o.r.	o.r.
Cv - Value MS 0.15	gal/min	3.2	4.1	7.4	10.4	o.r.	24.3	34.2	o.r.	o.r.	o.r.	o.r.	o.r.
Kvs - Value MS 0.10	m^3/h	o.r.*	o.r.	o.r.	9.0	14.0	19.0	o.r.	o.r.	o.r.	o.r.	o.r.	o.r.
Cv - Value MS 0.10	gal/min	o.r.	o.r.	o.r.	10.4	16.2	22.0	o.r.	o.r.	o.r.	o.r.	o.r.	o.r.
Kvs - Value 100µ	m^3/h	2.8	3.3	6.0	7.0	o.r.	13.5	18.5	o.r.	o.r.	o.r.	o.r.	o.r.
Cv - Value 100µ	gal/min	3.2	3.8	6.9	8.1	o.r.	15.6	21.4	o.r.	o.r.	o.r.	o.r.	o.r.
Kvs - Value 30µ	m^3/h	o.r.	1.7	3.5	4.0	o.r.	6.5	11.0	o.r.	o.r.	o.r.	o.r.	o.r.
Cv - Value 30µ	gal/min	o.r.	1.9	4.0	4.6	o.r.	7.5	12.7	o.r.	o.r.	o.r.	o.r.	o.r.

*o.r. = on request. Dimensions in mm.

Edition 2022-11

Safety Valves
Type 06001 - gastight

Cryogenic Safety Valves, angle type, brass, PN63, type tested TÜV-SV.1048. S/G/L

Standard Safety Valve,
complete with carbon filled PTFE valve seal, closed bonnet, gastight
Outlet: female thread Rc 3/8 acc. to ISO 7/1
"cleaned and degreased for oxygen service"

Part No. 06001.X.0000
Inlet: male thread type R (BSPT) acc. to ISO 7/1

Part No. 06001.X.2000
Inlet: male thread type G (BSPP) acc. to ISO 228/1

Part No. 06001.X.5000
Inlet: male thread NPT acc. to ANSI B 1.20.1

Available options - on request only:
· with installed elbow at the outlet

Applications:
Provided as safety device for protection against thermal expansion in pipeworks and parts of facilities.
Approved for air gases, vapours and cryogenic liquefied gases incl. LNG.
Working temperature: -196°C / -321°F (77K) up to +65°C / +149°F (338K), suitable for horizontal installation

Materials		DIN EN	ASME/ASTM
1	Body	CW617N	EN12165 CW617N Code Case 1750
2	Disc	PTFE / Carbon filled (25%)	
3	Guide plate	CW614N	EN12164 CW614N Code Case 1750
4	Stem	CW614N	EN12164 CW614N Code Case 1750
5	Spring	1.4571	A 313 Grade 316Ti
6	Bonnet	CW614N	EN12164 CW614N Code Case 1750
7	Spring clamp	CW614N	EN12164 CW614N Code Case 1750
8	Thread ring	CW614N	EN12164 CW614N Code Case 1750
9	Cap	CW614N	EN12164 CW614N Code Case 1750

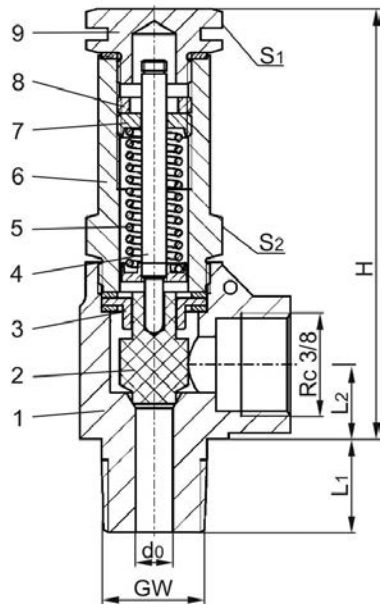

Type 06001	Technical data			
Nominal size	**GW**	**1/4**	**3/8**	**1/2**
Orifice	d_0	6.0	6.0	6.0
Dimension code	.X.	0200	0300	0400
Set pressure range	bar	5.0-55.0	5.0-55.0	5.0-55.0
Height	H	70	70	70
Length	L_1	13	15	17
Length	L_2	13	13	13
Wrench size across flats	S_1	19	19	19
Wrench size across flats	S_2	19	19	19
Weight	ca. kg	0.18	0.195	0.21
Coefficient of discharge	α_w	0.09	0.09	0.09

Dimensions in mm.

Safety Valves
Type 06001 - gastight

Discharge capacities
Calculation of flow rate acc. to AD2000-Merkblatt A2 / DIN EN ISO 4126-1

Medium:
Air in m^3/h at 0°C and 1013.25 mbar
Water in kg/h

The capacity indicated below is for a fully opened valve.

d_0 - orifice
A_0 - flow area

Set pressure in bar (g)	GW	1/4, 3/8 & 1/2	1/4, 3/8 & 1/2
	d_0(mm)	6.0	6.0
	A_0(mm^2)	28.3	28.3
	Medium	**Air**	**Water**
5.0		11	304
6.0		13	333
7.0		15	360
8.0		17	384
9.0		19	408
10.0		21	430
12.0		25	471
14.0		29	508
16.0		33	544
18.0		36	577
20.0		41	608
22.0		45	637
24.0		48	666
26.0		52	693
28.0		56	719
30.0		61	744
32.0		65	769
34.0		68	792
36.0		72	815
38.0		76	838
40.0		81	859
42.0		85	881
44.0		89	901
46.0		93	922
48.0		97	941
50.0		102	961
52.0		106	980
54.0		110	999
55.0		112	1008

Safety Valves
Type 06002, Type 06006

Cryogenic Safety Valves, angle type, brass, PN63, type tested TÜV-SV.1048. S/G
Standard safety valve, with carbon filled PTFE valve seal
Outlet: female thread Rc 3/8 acc. to ISO 7/1, "cleaned and degreased for oxygen service"
Type 06002: drainage hole in the locking screw
Type 06006: drainage hole in bonnet
Part No. 06002.X.0000
Part No. 06006.X.0000 (with lifting device)
Inlet: male thread type R (BSPT) acc. to ISO 7/1
Part No. 06002.X.2000
Part No. 06006.X.2000 (with lifting device)
Inlet: male thread type G (BSPP) acc. to ISO 228/1
Part No. 06002.X.5000
Part No. 06006.X.5000 (with lifting device)
Inlet: male thread NPT acc. to ANSI B 1.20.1
Available options - on request only:
· with installed elbow at the outlet

Applications:
Provided as safety device for protection against thermal expansion in pipeworks and parts of facilities.
Approved for air gases, vapours and cryogenic liquefied gases incl. LNG.
Working temperature: -196°C / -321°F (77K) up to +150°C / +302°F (423K), suitable for horizontal installation

Materials		DIN EN	ASME/ASTM
1	Body	CW617N	EN12165 CW617N Code Case 1750
2	Valve seal	PTFE / Carbon filled (25%)	
3	Disc	CW452K	B 103 UNS C51900
4	Guide plate	CC493K	SB 505 C93200
5	Stem	CW614N	EN12164 CW614N Code Case 1750
6	Spring	1.4571	A 313 Grade 316Ti
7	Bonnet	CW614N	EN12164 CW614N Code Case 1750
8	Spring clamp	CW614N	EN12164 CW614N Code Case 1750
9	Thread ring	CW614N	EN12164 CW614N Code Case 1750
10	Cap	CW614N	EN12164 CW614N Code Case 1750
11	Lifting device	CW614N	EN12164 CW614N Code Case 1750
12	Closing cap	CW507L	B 30 UNS C27000

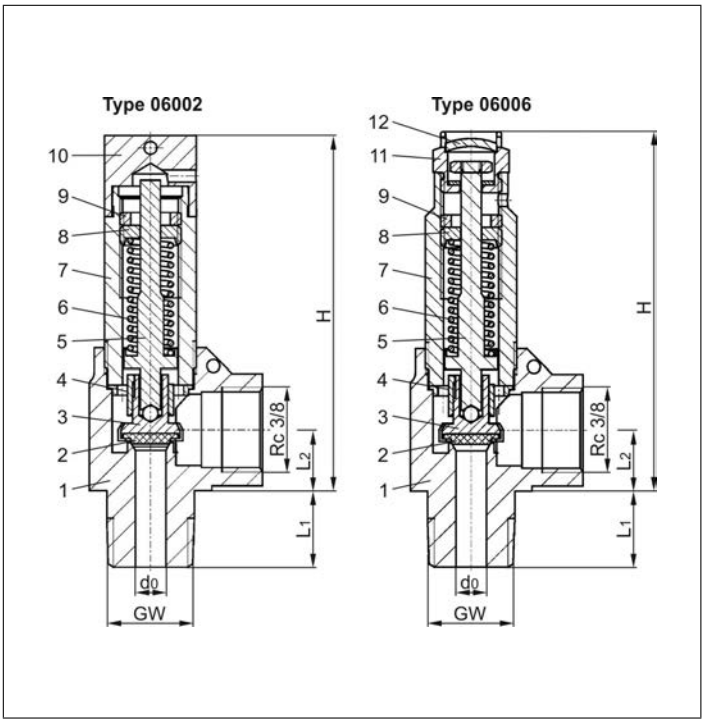

Technical data		Type 06002			Type 06006		
Nominal size	**GW**	**1/4**	**3/8**	**1/2**	**1/4**	**3/8**	**1/2**
Orifice	d_0	6.0	6.0	6.0	6.0	6.0	6.0
Dimension code	.X.	0200	0300	0400	0200	0300	0400
Set pressure range	bar	1.0-55.0	1.0-55.0	1.0-55.0	1.0-55.0	1.0-55.0	1.0-55.0
Height	H	70	70	70	72	72	72
Length	L_1	13	15	17	13	15	17
Length	L_2	13	13	13	13	13	13
Weight	ca. kg	0.185	0.20	0.22	0.18	0.195	0.21
Coeff. of discharge from 3.0 bar	α_w	0.42	0.42	0.42	0.42	0.42	0.42

Dimensions in mm.

Safety Valves
Type 06002, Type 06006

Discharge capacities

Medium:
Air in m^3/h at 0°C and 1013.25 mbar
Air in SCFM at 60°F (15.6°C) and 14.7 psia (1013.25 mbar)

The capacity indicated below is for a fully opened valve.

d_0 - orifice
A_0 - flow area

Calculation of discharge capacity acc. to AD2000-Merkblatt A2 / DIN EN ISO 4126-1 resp. ASME Code Sec. VIII.

Set pressure in bar (g)	GW	1/4, 3/8 & 1/2
	d_0(mm)	6.0
	A_0(mm^2)	28.3
	Medium	**Air in m^3/h**
1.0		15
2.0		26
3.0		35
4.0		44
5.0		53
6.0		62
7.0		71
8.0		80
9.0		89
10.0		98
12.0		116
14.0		134
16.0		152
18.0		170
20.0		190
22.0		208
24.0		226
26.0		244
28.0		262
30.0		283
32.0		301
34.0		320
36.0		338
38.0		356
40.0		378
42.0		396
44.0		415
46.0		433
48.0		452
50.0		474
52.0		493
54.0		511
55.0		521

Set pressure in psig	GW	1/4, 3/8 & 1/2
	d_0(inch)	0.236
	A_0(in^2)	0.044
	Medium	**Air in SCFM**
72		32
80		35
90		38
100		42
110		46
120		49
130		53
140		57
150		61
160		64
170		68
180		72
190		75
200		79
225		88
250		98
275		107
300		116
325		125
350		135
375		144
400		153
425		163
450		172
475		181
500		190
525		200
550		209
575		218
600		227
625		237
650		246
675		255
700		264
725		274
750		283
775		292
798		301

Safety Valves
Type 06002 - gastight

Cryogenic Safety Valves, angle type, brass, PN63, type tested TÜV-SV.1048. S/G

Standard Safety Valve,
gastight, closed bonnet
with carbon filled PTFE valve seal
Outlet: female thread Rc 3/8 acc. to ISO 7/1
"cleaned and degreased for oxygen service"

Part No. 06002.X.0020
Inlet: male thread type R (BSPT) acc. to ISO 7/1

Part No. 06002.X.2020
Inlet: male thread type G (BSPP) acc. to ISO 228/1

Part No. 06002.X.5020
Inlet: male thread NPT acc. to ANSI B 1.20.1
Available options - on request only:
· with installed elbow at the outlet

Applications:
Provided as safety device for protection against thermal expansion in pipeworks and parts of facilities.
Approved for air gases, vapours and cryogenic liquefied gases incl. LNG.
Working temperature: -196°C / -321°F (77K) up to +150°C / +302°F (423K), suitable for horizontal installation

Materials		DIN EN	ASME/ASTM
1	Body	CW617N	EN12165 CW617N Code Case 1750
2	Valve seal	PTFE / Carbon filled (25%)	
3	Disc	CW452K	B 103 UNS C51900
4	Guide plate	CC493K	SB 505 C93200
5	Stem	CW614N	EN12164 CW614N Code Case 1750
6	Spring	1.4571	A 313 Grade 316Ti
7	Bonnet	CW614N	EN12164 CW614N Code Case 1750
8	Spring clamp	CW614N	EN12164 CW614N Code Case 1750
9	Thread ring	CW614N	EN12164 CW614N Code Case 1750
10	Cap	CW614N	EN12164 CW614N Code Case 1750

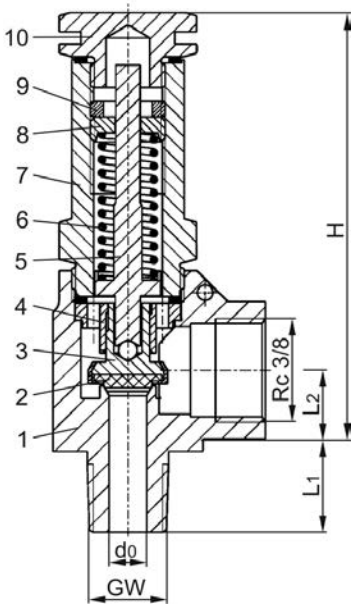

Type 06002	Technical data			
Nominal size	**GW**	**1/4**	**3/8**	**1/2**
Orifice	d_0	6.0	6.0	6.0
Dimension code	.X.	0200	0300	0400
Set pressure range	bar	1.0-55.0	1.0-55.0	1.0-55.0
Height	H	70	70	70
Length	L_1	13	15	17
Length	L_2	13	13	13
Weight	ca. kg	0.18	0.20	0.22
Coefficient of discharge	α_w	0.34	0.34	0.34

Dimensions in mm.

Safety Valves
Type 06002 - gastight

Discharge capacities

Medium:
Air in m^3/h at 0°C and 1013.25 mbar
Air in SCFM at 60°F (15.6°C) and 14.7 psia (1013.25 mbar)

The capacity indicated below is for a fully opened valve.

d_0 - orifice
A_0 - flow area

Calculation of discharge capacity acc. to AD2000-Merkblatt A2 / DIN EN ISO 4126-1 resp. ASME Code Sec. VIII.

Set pressure in bar (g)	GW	1/4, 3/8 & 1/2
	d_0(mm)	6.0
	A_0(mm^2)	28.3
	Medium	**Air in m^3/h**
1.0		13
2.0		20
3.0		28
4.0		36
5.0		43
6.0		50
7.0		57
8.0		65
9.0		72
10.0		79
12.0		94
14.0		108
16.0		123
18.0		138
20.0		154
22.0		168
24.0		183
26.0		198
28.0		212
30.0		229
32.0		244
34.0		259
36.0		274
38.0		288
40.0		306
42.0		321
44.0		336
46.0		351
48.0		366
50.0		384
52.0		399
54.0		414
55.0		421

Set pressure in psig	GW	1/4, 3/8 & 1/2
	d_0(inch)	0.236
	A_0(in^2)	0.044
	Medium	**Air in SCFM**
74		29
80		31
90		34
100		38
110		41
120		44
130		48
140		51
150		54
160		58
170		61
180		64
190		68
200		71
225		79
250		87
275		96
300		104
325		112
350		121
375		129
400		137
425		146
450		154
475		162
500		171
525		179
550		187
575		195
600		204
625		212
650		220
675		229
700		237
725		245
750		254
775		262
798		270

Safety Valves
Type 06011 - gastight

Cryogenic Safety Valves, angle type, stainless steel, PN63, type tested TÜV-SV.1048. S/G/L

Standard safety valve,
complete with carbon filled PTFE valve seal, closed bonnet, gastight
Outlet: female thread Rc 3/8 acc. to ISO 7/1
"cleaned and degreased for oxygen service"

Part No. 06011.X.0000
Inlet: male thread type R (BSPT) acc. to ISO 7/1

Part No. 06011.X.2000
Inlet: male thread type G (BSPP) acc. to ISO 228/1

Part No. 06011.X.5000
Inlet: male thread NPT acc. to ANSI B 1.20.1

Available options - on request only:
· with installed elbow at the outlet

Applications:
Provided as safety device for protection against thermal expansion in pipeworks and parts of facilities.
Approved for air gases, vapours and cryogenic liquefied gases incl. LNG.
Working temperature: -196°C / -321°F (77K) up to +65°C / +149°F (338K), suitable for horizontal installation

Materials		DIN EN	ASME/ASTM
1	Body	1.4408	A 351 CF8M
2	Disc	PTFE / Carbon filled (25%)	
3	Guide plate	1.4301	A 276 Grade 304
4	Stem	1.4301	A 276 Grade 304
5	Spring	1.4571	A 313 Grade 316Ti
6	Bonnet	1.4301	A 276 Grade 304
7	Spring clamp	1.4305	A 276 Grade 303
8	Thread ring	1.4305	A 276 Grade 303
9	Cap	1.4301	A 276 Grade 304

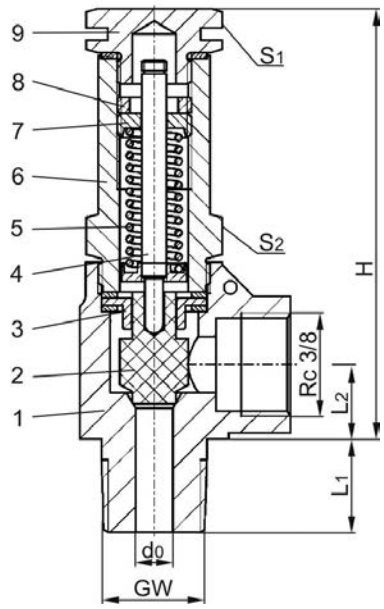

Type 06011	Technical data			
Nominal size	**GW**	**1/4**	**3/8**	**1/2**
Orifice	d_0	6.0	6.0	6.0
Dimension code	.X.	0200	0300	0400
Set pressure range	bar	5.0-55.0	5.0-55.0	5.0-55.0
Height	H	70	70	70
Length	L_1	13	15	17
Length	L_2	13	13	13
Wrench size across flats	S_1	19	19	19
Wrench size across flats	S_2	19	19	19
Weight	ca. kg	0.18	0.195	0.21
Coefficient of discharge	α_w	0.09	0.09	0.09

Dimensions in mm.

Safety Valves
Type 06011 - gastight

Discharge capacities
Calculation of flow rate acc. to AD2000-Merkblatt A2 / DIN EN ISO 4126-1

Medium:
Air in m^3/h at 0°C and 1013.25 mbar
Water in kg/h

The capacity indicated below is for a fully opened valve.

d_0 - orifice
A_0 - flow area

Set pressure in bar (g)	GW	1/4, 3/8 & 1/2	1/4, 3/8 & 1/2
	d_0(mm)	6.0	6.0
	A_0(mm^2)	28.3	28.3
	Medium	**Air**	**Water**
5.0		11	304
6.0		13	333
7.0		15	360
8.0		17	384
9.0		19	408
10.0		21	430
12.0		25	471
14.0		29	508
16.0		33	544
18.0		36	577
20.0		41	608
22.0		45	637
24.0		48	666
26.0		52	693
28.0		56	719
30.0		61	744
32.0		65	769
34.0		68	792
36.0		72	815
38.0		76	838
40.0		81	859
42.0		85	881
44.0		89	901
46.0		93	922
48.0		97	941
50.0		102	961
52.0		106	980
54.0		110	999
55.0		112	1008

Safety Valves
Type 06012, Type 06016

Cryogenic Safety Valves, angle type, stainless steel, PN63, type tested TÜV-SV.1048. S/G
Standard safety valve, with carbon filled PTFE valve seal, open bonnet
Outlet: female thread Rc 3/8 acc. to ISO 7/1, "cleaned and degreased for oxygen service"
Type 06012: drainage hole in the locking screw
Type 06016: drainage hole in the bonnet
Part No. 06012.X.0000:
Part No. 06016.X.0000 (with lifting device)
Inlet: male thread type R (BSPT) acc. to ISO 7/1
Part No. 06012.X.2000
Part No. 06016.X.2000 (with lifting device)
Inlet: male thread type G (BSPP) acc. to ISO 228/1
Part No. 06012.X.5000
Part No. 06016.X.5000 (with lifting device)
Inlet: male thread NPT acc. to ANSI B 1.20.1
Available options - on request only:
· with installed elbow at the outlet

Applications:
Provided as safety device for protection against thermal expansion in pipeworks and parts of facilities.
Approved for air gases, vapours and cryogenic liquefied gases incl. LNG.
Working temperature: -196°C / -321°F (77K) up to +150°C / +302°F (423K), suitable for horizontal installation

Materials		DIN EN	ASME/ASTM
1	Body	1.4408	SA 351 CF8M
2	Valve seal	PTFE / Carbon filled (25%)	
3	Disc	1.4301	SA 479 Grade 304
4	Guide plate	1.4301	SA 479 Grade 304
5	Stem	1.4301	SA 479 Grade 304
6	Spring	1.4571	SA 313 Grade 316Ti
7	Bonnet	1.4301	SA 479 Grade 304
8	Spring clamp	1.4305	SA 314 Grade 303
9	Thread ring	1.4305	SA 314 Grade 303
10	Cap	1.4301	SA 479 Grade 304
11	Lifting device	1.4305	SA 479 Grade 303
12	Closing cap	1.4305	SA 479 Grade 303

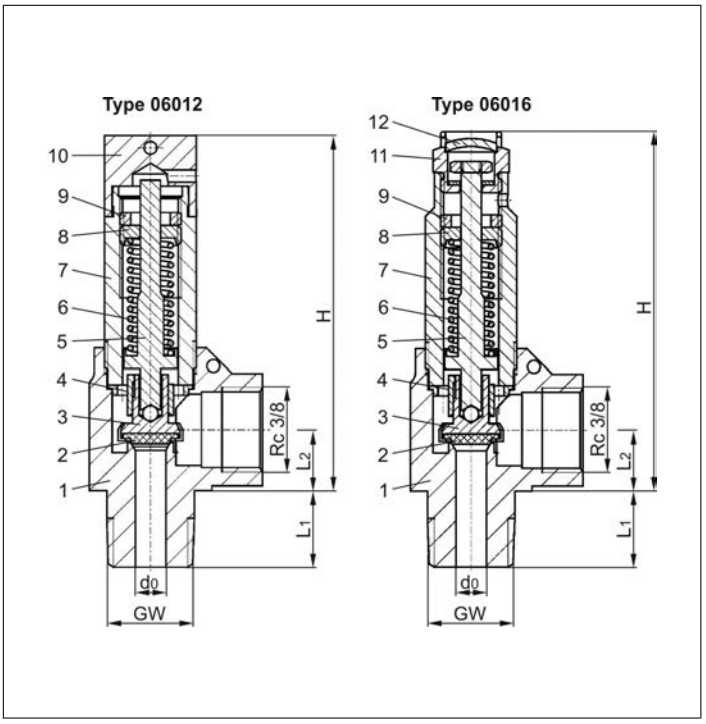

Technical data		Type 06012			Type 06016		
Nominal size	**GW**	**1/4**	**3/8**	**1/2**	**1/4**	**3/8**	**1/2**
Orifice	d_0	6.0	6.0	6.0	6.0	6.0	6.0
Dimension code	.X.	0200	0300	0400	0200	0300	0400
Set pressure range	bar	1.0-55.0	1.0-55.0	1.0-55.0	1.0-55.0	1.0-55.0	1.0-55.0
Height	H	70	70	70	72	72	72
Length	L_1	13	15	17	13	15	17
Length	L_2	13	13	13	13	13	13
Weight	ca. kg	0.185	0.20	0.22	0.18	0.195	0.21
Coeff. of discharge from 3.0 bar	α_w	0.42	0.42	0.42	0.42	0.42	0.42

Dimensions in mm.

Safety Valves
Type 06012, Type 06016

Discharge capacities

Medium:
Air in m^3/h at 0°C and 1013.25 mbar
Air in SCFM at 60°F (15.6°C) and 14.7 psia (1013.25 mbar)

The capacity indicated below is for a fully opened valve.

d_0 - orifice
A_0 - flow area

Calculation of discharge capacity acc. to AD2000-Merkblatt A2 / DIN EN ISO 4126-1 resp. ASME Code Sec. VIII.

Set pressure in bar (g)	GW	1/4, 3/8 & 1/2
	d_0(mm)	6.0
	A_0(mm^2)	28.3
	Medium	**Air in m^3/h**
1.0		15
2.0		26
3.0		35
4.0		44
5.0		53
6.0		62
7.0		71
8.0		80
9.0		89
10.0		98
12.0		116
14.0		134
16.0		152
18.0		170
20.0		190
22.0		208
24.0		226
26.0		244
28.0		262
30.0		283
32.0		301
34.0		320
36.0		338
38.0		356
40.0		378
42.0		396
44.0		415
46.0		433
48.0		452
50.0		474
52.0		493
54.0		511
55.0		521

Set pressure in psig	GW	1/4, 3/8 & 1/2
	d_0(inch)	0.236
	A_0(in^2)	0.044
	Medium	**Air in SCFM**
72		32
80		35
90		38
100		42
110		46
120		49
130		53
140		57
150		61
160		64
170		68
180		72
190		75
200		79
225		88
250		98
275		107
300		116
325		125
350		135
375		144
400		153
425		163
450		172
475		181
500		190
525		200
550		209
575		218
600		227
625		237
650		246
675		255
700		264
725		274
750		283
775		292
798		301

Safety Valves
Type 06012 - gastight

Cryogenic Safety Valves, angle type, stainless steel, PN63, type tested TÜV-SV.1048. S/G

Standard Safety Valve,
gastight, closed bonnet
with carbon filled PTFE valve seal
Outlet: female thread Rc 3/8 acc. to ISO 7/1
"cleaned and degreased for oxygen service"

Part No. 06012.X.0020
Inlet: male thread type R (BSPT) acc. to ISO 7/1

Part No. 06012.X.2020
Inlet: male thread type G (BSPP) acc. to ISO 228/1

Part No. 06012.X.5020
Inlet: male thread NPT acc. to ANSI B 1.20.1
Available options - on request only:
· with installed elbow at the outlet

Applications:
Provided as safety device for protection against thermal expansion in pipeworks and parts of facilities.
Approved for air gases, vapours and cryogenic liquefied gases incl. LNG.
Working temperature: -196°C / -321°F (77K) up to +150°C / +302°F (423K), suitable for horizontal installation

Materials		DIN EN	ASME/ASTM
1	Body	1.4408	SA 351 CF8M
2	Valve seal	PTFE / Carbon filled (25%)	
3	Disc	1.4301	SA 479 Grade 304
4	Guide plate	1.4301	SA 479 Grade 304
5	Stem	1.4301	SA 479 Grade 304
6	Spring	1.4571	SA 313 Grade 316Ti
7	Bonnet	1.4301	SA 479 Grade 304
8	Spring clamp	1.4305	SA 314 Grade 303
9	Thread ring	1.4305	SA 314 Grade 303
10	Cap	1.4301	SA 479 Grade 304

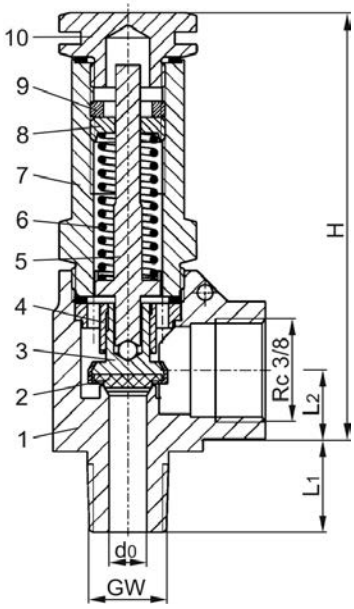

Type 06012	Technical data			
Nominal size	**GW**	**1/4**	**3/8**	**1/2**
Orifice	d_0	6.0	6.0	6.0
Dimension code	.X.	0200	0300	0400
Set pressure range	bar	1.0-55.0	1.0-55.0	1.0-55.0
Height	H	70	70	70
Length	L_1	13	15	17
Length	L_2	13	13	13
Weight	ca. kg	0.18	0.20	0.22
Coefficient of discharge	α_w	0.34	0.34	0.34

Dimensions in mm.

Safety Valves
Type 06012 - gastight

Discharge capacities

Medium:
Air in m^3/h at 0°C and 1013.25 mbar
Air in SCFM at 60°F (15.6°C) and 14.7 psia (1013.25 mbar)

The capacity indicated below is for a fully opened valve.

d_0 - orifice
A_0 - flow area

Calculation of discharge capacity acc. to AD2000-Merkblatt A2 / DIN EN ISO 4126-1 resp. ASME Code Sec. VIII.

Set pressure in bar (g)	GW	1/4, 3/8 & 1/2
	d_0(mm)	6.0
	A_0(mm^2)	28.3
	Medium	**Air in m^3/h**
1.0		13
2.0		20
3.0		28
4.0		36
5.0		43
6.0		50
7.0		57
8.0		65
9.0		72
10.0		79
12.0		94
14.0		108
16.0		123
18.0		138
20.0		154
22.0		168
24.0		183
26.0		198
28.0		212
30.0		229
32.0		244
34.0		259
36.0		274
38.0		288
40.0		306
42.0		321
44.0		336
46.0		351
48.0		366
50.0		384
52.0		399
54.0		414
55.0		421

Set pressure in psig	GW	1/4, 3/8 & 1/2
	d_0(inch)	0.236
	A_0(in^2)	0.044
	Medium	**Air in SCFM**
74		29
80		31
90		34
100		38
110		41
120		44
130		48
140		51
150		54
160		58
170		61
180		64
190		68
200		71
225		79
250		87
275		96
300		104
325		112
350		121
375		129
400		137
425		146
450		154
475		162
500		171
525		179
550		187
575		195
600		204
625		212
650		220
675		229
700		237
725		245
750		254
775		262
798		270

Safety Valves
Type 06474

Cryogenic Safety Valves, angle type, bronze, PN63, type tested TÜV-SV.836. S/G
Standard safety valve,
with carbon filled PTFE valve seal, closed bonnet
Outlet: female thread G 1/2 acc. to ISO 228/1
"cleaned and degreased for oxygen service"
Part No. 06474.X.0000
Part No. 06474.0600.9000
Inlet: male thread type G (BSPP) acc. to ISO 228/1
Part No. 06474.X.5000
Inlet: male thread NPT acc. to ANSI B 1.20.1
Part No. 06474.0600.0000
Inlet: union type weld/braze fitting for pipe outside diameter 12mm

Available options - on request only:
· external parts nickel plated
· with installed elbow at the outlet

Applications:
Provided as safety device for protection against excessive pressure in stationary and moveable gas cylinders and pressure vessels. Approved for air gases, vapours and cryogenic liquefied gases incl. LNG.
Working temperature: -196°C / -321°F (77K) up to +150°C / +302°F (423K), suitable for horizontal installation

Materials		DIN EN	ASME/ASTM
1	Outlet body	CC491K	B 62 UNS C83600
2	Inlet body	1.4301	A 276 Grade 304
3	Valve seal	PTFE / Carbon filled (25%)	
4	Disc	CW452K	B 159 UNS C51900
5	Guide plate	CC493K	B 505 UNS C93200
6	Stem	CW614N	B 283 UNS C38500
7	Spring	1.4571	A 313 Grade 316Ti
8	Bonnet	1.4301	A 276 Grade 304
9	Spring clamp	CW614N	B 283 UNS C38500
10	Thread ring	CW614N	B 283 UNS C38500
11	Cap	CW614N	B 283 UNS C38500
15	Weld/Braze fitting	1.4301	A 276 Grade 304
16	Union nut	CW614N	B 283 UNS C38500

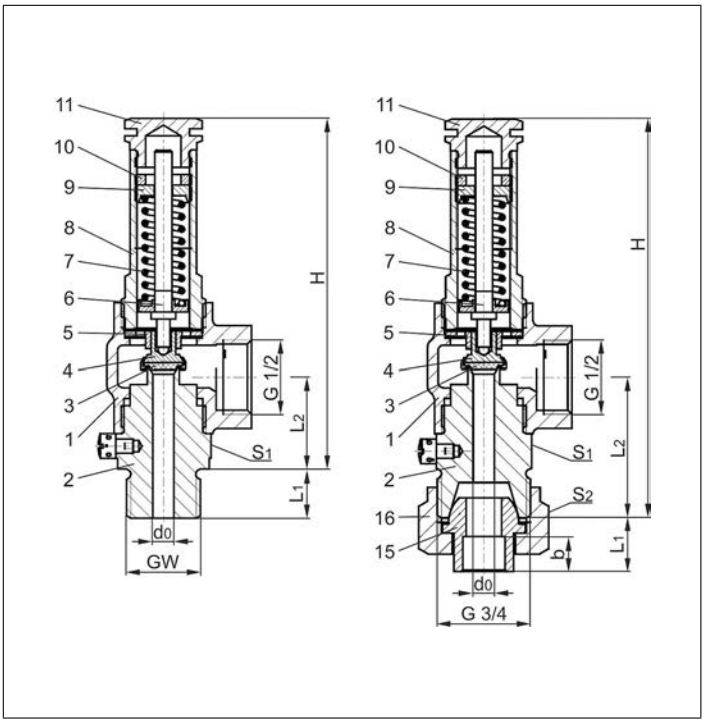

Type 06474	Technical data				
Nominal size	**GW**	**1/4**	**3/8**	**1/2**	**3/4**
Orifice	d_0	6.0	6.0	6.0	6.0
Dimension code	.X.	0200	0300	0400	0600
Set pressure range	bar	0.4-55.0	0.4-55.0	0.4-55.0	0.4-55.0
Height	H	100	100	100	114
Length	L_1	12	13	14	15.5
Length	L_2	26	26	26	40
Socket depth	b	-	-	-	10
Wrench size across flats	S_1	27	27	27	27
Wrench size across flats	S_2	-	-	-	32
Weight	ca. kg	0.34	0.36	0.38	0.48
Coefficient of discharge	α_w	0.66	0.66	0.66	0.66

Dimensions in mm.

Safety Valves
Type 06474

Discharge capacities
Calculation of flow rate acc. to AD2000-Merkblatt A2 / DIN EN ISO 4126-1

Medium:
Air in m^3/h at 0°C and 1013.25 mbar

The capacity indicated below is for a fully opened valve.

d_0 - orifice
A_0 - flow area

Set pressure in bar (g)	GW	1/4, 3/8, 1/2 & 3/4
	d_0(mm)	6.0
	A_0(mm^2)	28.3
	Medium	**Air**
0.4		14.7
0.5		16.5
0.6		18.1
0.7		19.6
0.8		21
0.9		22.3
1.0		23.6
1.5		31.3
2.0		39
2.5		47.1
3.0		54.9
4.0		69
5.0		83.1
6.0		97.2
7.0		111
8.0		126
9.0		140
10.0		154
12.0		182
14.0		211
16.0		239
18.0		267
20.0		298
22.0		327
24.0		355
26.0		384
28.0		412
30.0		445
32.0		474
34.0		502
36.0		531
38.0		560
40.0		594
42.0		623
44.0		652
46.0		681
48.0		710
50.0		745
55.0		818

Safety Valves
Type 06478

Cryogenic Safety Valves, angle type, bronze, PN63, type tested TÜV-SV.836. S/G
Standard safety valve,
with carbon filled PTFE valve seal, closed bonnet, with lifting device
Outlet: female thread G 1/2 acc. to ISO 228/1
"cleaned and degreased for oxygen service"
Part No. 06478.X.0000
Part No. 06478.0600.9000
Inlet: male thread type G (BSPP) acc. to ISO 228/1
Part No. 06478.X.5000
Inlet: male thread NPT acc. to ANSI B 1.20.1
Part No. 06478.0600.0000
Inlet: union type weld/braze fitting for pipe outside diameter 12mm

Available options - on request only:
· external parts nickel plated
· with installed elbow at the outlet

Applications:
Provided as safety device for protection against excessive pressure in stationary and moveable gas cylinders and pressure vessels. Approved for air gases, vapours and cryogenic liquefied gases incl. LNG.
Working temperature: -196°C / -321°F (77K) up to +150°C / +302°F (423K), suitable for horizontal installation

Materials		DIN EN	ASME/ASTM
1	Outlet body	CC491K	B 62 UNS C83600
2	Inlet body	1.4301	A 276 Grade 304
3	Valve seal	PTFE / Carbon filled (25%)	
4	Disc	CW452K	B 159 UNS C51900
5	Guide plate	CC493K	B 505 UNS C93200
6	Stem	CW614N	B 283 UNS C38500
7	Spring	1.4571	A 313 Grade 316Ti
8	Bonnet	1.4301	A 276 Grade 304
9	Spring clamp	CW614N	B 283 UNS C38500
10	Thread ring	CW614N	B 283 UNS C38500
11	Lifting cap	CW614N	B 283 UNS C38500
12	Lifting spring	1.4571	A 276 Grade 316Ti
13	Lifting stem	CW614N	B 283 UNS C38500
14	Lifting device	CW614N	B 283 UNS C38500
15	Weld/Braze fitting	1.4301	A 276 Grade 304
16	Union nut	CW614N	B 283 UNS C38500

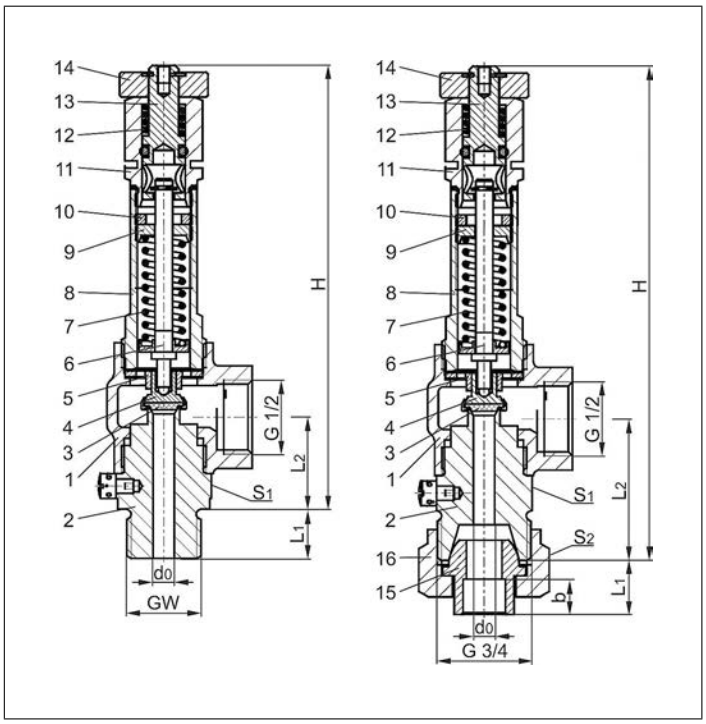

Type 06478	Technical data				
Nominal size	**GW**	**1/4**	**3/8**	**1/2**	**3/4**
Orifice	d_0	6.0	6.0	6.0	6.0
Dimension code	.X.	0200	0300	0400	0600
Set pressure range	bar	0.4-55.0	0.4-55.0	0.4-55.0	0.4-55.0
Height	H	126	126	126	140
Length	L_1	12	13	14	15.5
Length	L_2	26	26	26	40
Socket depth	b	-	-	-	10
Wrench size across flats	S_1	27	27	27	27
Wrench size across flats	S_2	-	-	-	32
Weight	ca. kg	0.40	0.42	0.44	0.47
Coefficient of discharge	α_w	0.66	0.66	0.66	0.66

Dimensions in mm.

Safety Valves
Type 06478

Discharge capacities
Calculation of flow rate acc. to AD2000-Merkblatt A2 / DIN EN ISO 4126-1

Medium:
Air in m^3/h at 0°C and 1013.25 mbar

The capacity indicated below is for a fully opened valve.

d_0 - orifice
A_0 - flow area

Set pressure in bar (g)	GW	1/4, 3/8, 1/2 & 3/4
	d_0(mm)	6.0
	A_0(mm^2)	28.3
	Medium	**Air**
0.4		14.7
0.5		16.5
0.6		18.1
0.7		19.6
0.8		21
0.9		22.3
1.0		23.6
1.5		31.3
2.0		39
2.5		47.1
3.0		54.9
4.0		69
5.0		83.1
6.0		97.2
7.0		111
8.0		126
9.0		140
10.0		154
12.0		182
14.0		211
16.0		239
18.0		267
20.0		298
22.0		327
24.0		355
26.0		384
28.0		412
30.0		445
32.0		474
34.0		502
36.0		531
38.0		560
40.0		594
42.0		623
44.0		652
46.0		681
48.0		710
50.0		745
55.0		818

Safety Valves
Type 06386

Cryogenic Safety Valves, angle type, bronze, PN40, type tested TÜV-SV.780. S/G
Standard safety valve (0.2 - 25.0/40.0 bar). **ASME certification only for d_0 10.5**
Metal to metal seated, closed bonnet
"cleaned and degreased for oxygen service"
Part No. 06386.X.0000
Inlet: male thread type G (BSPP) acc. to ISO 228/1, Outlet: female thread type G (BSPP) acc. to ISO 228/1
Part No. 06386.X.2000
Inlet: male thread type R (BSPT) acc. to ISO 7/1, Outlet: female thread type G (BSPP) acc. to ISO 228/1
Part No. 06386.X.5000
Inlet: male thread NPT acc. to ANSI B 1.20.1, Outlet: female thread type G (BSPP) acc. to ISO 228/1
Part No. 06386.X.6000
Inlet: male thread NPT acc. to ANSI B 1.20.1, Outlet: female thread NPT acc. to ANSI B 1.20.1
Available options - on request only:
· external parts nickel plated · with installed elbow at the outlet

Applications:
Provided as safety device for protection against excessive pressure in stationary and moveable gas cylinders and pressure vessels. Approved for air gases, vapours and cryogenic liquefied gases incl. LNG.
Working temperature: -196°C / -321°F (77K) up to +185°C / +365°F (458K)

Materials		DIN EN	ASME/ASTM
1	Outlet body	CC491K	B 62 UNS C83600
2	Inlet body	1.4301	A 276 Grade 304
4	Disc	1.4541	A 276 Grade 321
5	Guide plate	CW453K	B 103 UNS C52100
6	Stem	CW453K	B 103 UNS C52100
7	Spring	1.4571	A 313 Grade 316Ti
8	Bonnet	1.4308	A 351 CF 8
9	Spring clamp	CW614N	B 283 UNS C38500
10	Thread ring	CW614N	B 283 UNS C38500
11	Cap	CW614N	B 283 UNS C38500

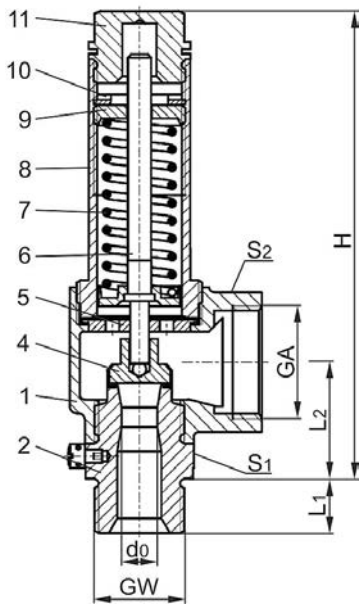

Type 06386	Technical data			
Nominal size	**GW**	**1/2**	**3/4**	**1**
Orifice	d_0	10.5	10.5	14.0
Dimension code	.X.	1004	1006	1410
Set pressure range	bar	0.2-25.0	0.2-25.0	0.2-40.0
Outlet	GA	1	1	1-1/4
Height	H	140	140	157
Length	L_1	14	16	18
Length	L_2	36	36	42
Wrench size across flats	S_1	30	30	41
Wrench size across flats	S_2	41	41	50
Weight	ca. kg	0.75	0.78	1.24
Coeff. of discharge from 3.0 bar	α_w	0.67	0.67	0.67

Dimensions in mm.

Safety Valves
Type 06386

Discharge capacities

Medium:
Air in m^3/h at 0°C and 1013.25 mbar
Air in SCFM at 60°F (15.6°C) and 14.7 psia (1013.25 mbar)

The capacity indicated below is for a fully opened valve.

d_0 - orifice
A_0 - flow area

Calculation of discharge capacity acc. to AD2000-Merkblatt A2 / DIN EN ISO 4126-1 resp. ASME Code Sec. VIII.

Set pressure in bar (g)	GW	1/2 & 3/4	1
	d_0(mm)	10.5	14
	A_0(mm^2)	86.6	153.9
	Medium	**Air in m^3/h**	
0.2		25	49
0.5		48	87
1.0		75	135
1.5		100	176
2.0		124	217
3.0		171	304
4.0		214	381
5.0		259	460
6.0		302	537
7.0		346	615
8.0		391	695
9.0		434	772
10.0		479	852
12.0		567	1008
14.0		655	1164
16.0		742	1320
18.0		830	1476
20.0		927	1648
22.0		1015	1805
24.0		1104	1963
25.0		1148	2041
26.0		-	2120
28.0		-	2278
30.0		-	2458
32.0		-	2617
34.0		-	2776
36.0		-	2935
38.0		-	3094
40.0		-	3281

Set pressure in psig	GW	1/2 & 3/4
	d_0(inch)	0.413
	A_0(in^2)	0.134
	Medium	**Air in SCFM**
30		81
40		100
50		118
60		137
70		156
80		175
90		193
100		212
120		249
140		287
160		324
180		362
200		399
220		436
240		474
260		511
280		549
300		586
320		623
340		661
363		704

Safety Valves
Type 06416

Cryogenic Safety Valves, angle type, bronze, PN40, type tested TÜV-SV.780. S/G
Standard safety valve (0.2 - 25.0/40.0 bar). **ASME certification only for $d_0$10.5**
Metal to metal seated, closed bonnet, with lifting device
"cleaned and degreased for oxygen service"
Part No. 06416.X.0000
Inlet: male thread type G (BSPP) acc. to ISO 228/1, Outlet: female thread type G (BSPP) acc. to ISO 228/1
Part No. 06416.X.2000
Inlet: male thread type R (BSPT) acc. to ISO 7/1, Outlet: female thread type G (BSPP) acc. to ISO 228/1
Part No. 06416.X.5000
Inlet: male thread NPT acc. to ANSI B 1.20.1, Outlet: female thread type G (BSPP) acc. to ISO 228/1
Part No. 06416.X.6000
Inlet: male thread NPT acc. to ANSI B 1.20.1, Outlet: female thread NPT acc. to ANSI B 1.20.1
Available options - on request only:
· external parts nickel plated · with installed elbow at the outlet

Applications:
Provided as safety device for protection against excessive pressure in stationary and moveable gas cylinders and pressure vessels. Approved for air gases, vapours and cryogenic liquefied gases incl. LNG.
Working temperature: -196°C / -321°F (77K) up to +185°C / +365°F (458K)

Materials		DIN EN	ASME/ASTM
1	Outlet body	CC491K	B 62 UNS C83600
2	Inlet body	1.4301	A 276 Grade 304
4	Disc	1.4541	A 276 Grade 321
5	Guide plate	CW453K	B 103 UNS C52100
6	Stem	CW453K	B 103 UNS C52100
7	Spring	1.4571	A 313 Grade 316Ti
8	Bonnet	1.4308	A 351 CF 8
9	Spring clamp	CW614N	B 283 UNS C38500
10	Thread ring	CW614N	B 283 UNS C38500
11	Lifting cap	CW614N	B 283 UNS C38500
12	Lifting spring	1.4571	A 276 Grade 316Ti
13	Lifting stem	CW614N	B 283 UNS C38500
14	Lever	1.4408	A 351 CF8M

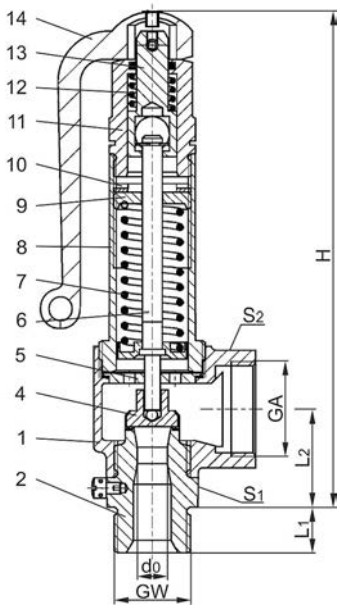

Type 06416	Technical data			
Nominal size	**GW**	**1/2**	**3/4**	**1**
Orifice	d_0	10.5	10.5	14.0
Dimension code	.X.	1004	1006	1410
Set pressure range	bar	0.2-25.0	0.2-25.0	0.2-40.0
Outlet	GA	1	1	1-1/4
Height	H	175	175	194
Length	L_1	14	16	18
Length	L_2	36	36	42
Wrench size across flats	S_1	30	30	41
Wrench size across flats	S_2	41	41	50
Weight	ca. kg	0.96	1.00	1.50
Coeff. of discharge from 3.0 bar	α_w	0.67	0.67	0.67

Dimensions in mm.

Safety Valves
Type 06416

Discharge capacities

Medium:
Air in m^3/h at 0°C and 1013.25 mbar
Air in SCFM at 60°F (15.6°C) and 14.7 psia (1013.25 mbar)

The capacity indicated below is for a fully opened valve.

d_0 - orifice
A_0 - flow area

Calculation of discharge capacity acc. to AD2000-Merkblatt A2 / DIN EN ISO 4126-1 resp. ASME Code Sec. VIII.

Set pressure in bar (g)	GW	1/2 & 3/4	1
	d_0(mm)	10.5	14
	A_0(mm^2)	86.6	153.9
	Medium	**Air in m^3/h**	
0.2		25	49
0.5		48	87
1.0		75	135
1.5		100	176
2.0		124	217
3.0		171	304
4.0		214	381
5.0		259	460
6.0		302	537
7.0		346	615
8.0		391	695
9.0		434	772
10.0		479	852
12.0		567	1008
14.0		655	1164
16.0		742	1320
18.0		830	1476
20.0		927	1648
22.0		1015	1805
24.0		1104	1963
25.0		1148	2041
26.0		-	2120
28.0		-	2278
30.0		-	2458
32.0		-	2617
34.0		-	2776
36.0		-	2935
38.0		-	3094
40.0		-	3281

Set pressure in psig	GW	1/2 & 3/4
	d_0(inch)	0.413
	A_0(in^2)	0.134
	Medium	**Air in SCFM**
30		81
40		100
50		118
60		137
70		156
80		175
90		193
100		212
120		249
140		287
160		324
180		362
200		399
220		436
240		474
260		511
280		549
300		586
320		623
340		661
363		704

Safety Valves
Type 06387

Cryogenic Safety Valves, angle type, bronze, PN40, type tested TÜV-SV.780. S/G
Standard safety valve (0.2 - 25.0 bar)
Metal to metal seated, closed bonnet
"cleaned and degreased for oxygen service"
Part No. 06387.X.0000
Inlet: female thread type G (BSPP) acc. to ISO 228/1
Outlet: female thread type G (BSPP) acc. to ISO 228/1

Available options - on request only:
· external parts nickel plated · with installed elbow at the outlet

Applications:
Provided as safety device for protection against excessive pressure in stationary and moveable gas cylinders and pressure vessels. Approved for air gases, vapours and cryogenic liquefied gases incl. LNG.
Working temperature: -196°C / -321°F (77K) up to +185°C / +365°F (458K)

Materials		DIN EN	ASME/ASTM
1	Outlet body	CC491K	B 62 UNS C83600
2	Inlet body	1.4301	A 276 Grade 304
4	Disc	1.4541	A 276 Grade 321
5	Guide plate	CW453K	B 103 UNS C52100
6	Stem	CW453K	B 103 UNS C52100
7	Spring	1.4571	A 313 Grade 316Ti
8	Bonnet	1.4308	A 351 CF 8
9	Spring clamp	CW614N	B 283 UNS C38500
10	Thread ring	CW614N	B 283 UNS C38500
11	Cap	CW614N	B 283 UNS C38500

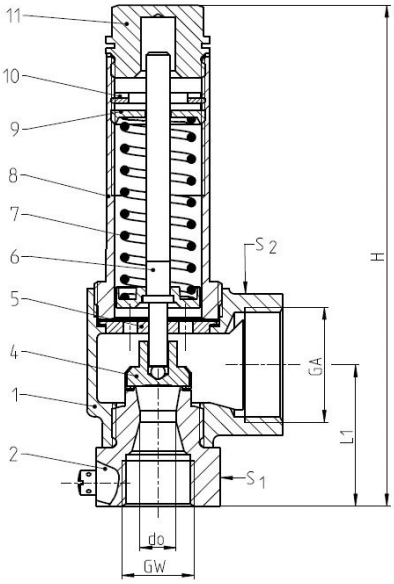

Type 06387	Technical data	
Nominal size	**GW**	**1/2**
Orifice	d_0	10.5
Dimension code	.X.	1004
Set pressure range	bar	0.2-25.0
Outlet	GA	1
Height	H	144
Length	L_1	41
Wrench size across flats	S_1	36
Wrench size across flats	S_2	41
Weight	ca. kg	0.78
Coeff. of discharge from 3.0 bar	α_w	0.67

Dimensions in mm.

Safety Valves
Type 06387

Discharge capacities
Calculation of flow rate acc. to AD2000-Merkblatt A2 / DIN EN ISO 4126-1

Medium:
Air in m^3/h at 0°C and 1013.25 mbar

The capacity indicated below is for a fully opened valve.

d_0 - orifice
A_0 - flow area

Set pressure in bar (g)	GW	1/2
	d_0(mm)	10.5
	A_0(mm^2)	86.6
	Medium	**Air**
0.2		25
0.5		48
1.0		75
1.5		100
2.0		124
3.0		171
4.0		214
5.0		259
6.0		302
7.0		346
8.0		391
9.0		434
10.0		479
12.0		567
14.0		655
16.0		742
18.0		830
20.0		927
22.0		1015
24.0		1104
25.0		1148
26.0		-
28.0		-
30.0		-
32.0		-
34.0		-
36.0		-
38.0		-
40.0		-

Safety Valves
Type 06417

Cryogenic Safety Valves, angle type, bronze, PN40, type tested TÜV-SV.780. S/G
Standard safety valve (0.2 - 25.0 bar)
Metal to metal seated, closed bonnet, with lifting device
"cleaned and degreased for oxygen service"
Part No. 06417.X.0000
Inlet: female thread type G (BSPP) acc. to ISO 228/1
Outlet: female thread type G (BSPP) acc. to ISO 228/1

Available options - on request only:
· external parts nickel plated · with installed elbow at the outlet

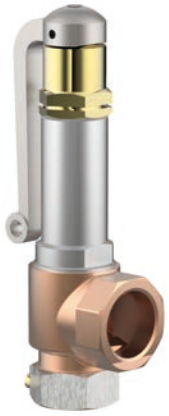

Applications:
Provided as safety device for protection against excessive pressure in stationary and moveable gas cylinders and pressure vessels. Approved for air gases, vapours and cryogenic liquefied gases incl. LNG.
Working temperature: -196°C / -321°F (77K) up to +185°C / +365°F (458K)

Materials		DIN EN	ASME/ASTM
1	Outlet body	CC491K	B 62 UNS C83600
2	Inlet body	1.4301	A 276 Grade 304
4	Disc	1.4541	A 276 Grade 321
5	Guide plate	CW453K	B 103 UNS C52100
6	Stem	CW453K	B 103 UNS C52100
7	Spring	1.4571	A 313 Grade 316Ti
8	Bonnet	1.4308	A 351 CF 8
9	Spring clamp	CW614N	B 283 UNS C38500
10	Thread ring	CW614N	B 283 UNS C38500
11	Lifting cap	CW614N	B 283 UNS C38500
12	Lifting spring	1.4571	A 276 Grade 316Ti
13	Lifting stem	CW614N	B 283 UNS C38500
14	Lever	1.4408	A 351 CF8M

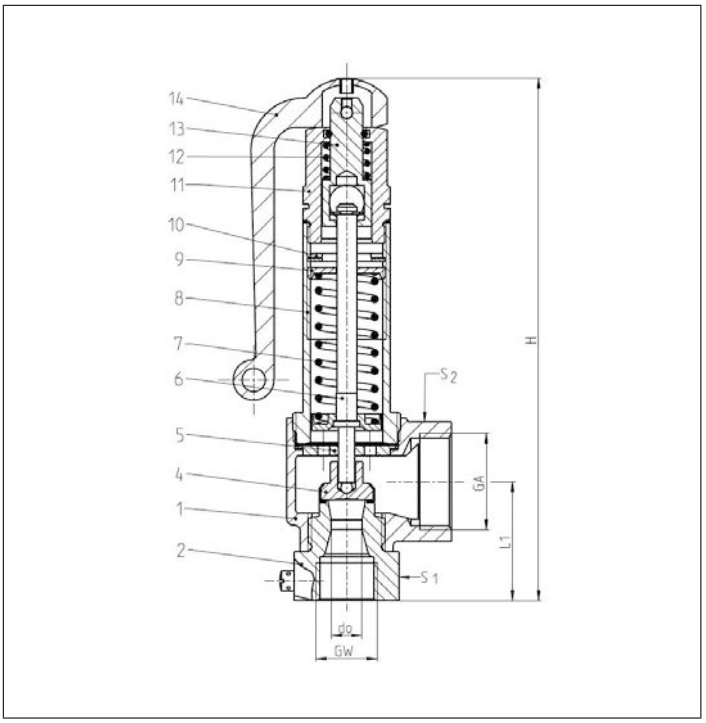

Type 06417	Technical data	
Nominal size	**GW**	**1/2**
Orifice	d_0	10.5
Dimension code	.X.	1004
Set pressure range	bar	0.2-25.0
Outlet	GA	1
Height	H	180
Length	L_1	41
Wrench size across flats	S_1	30
Wrench size across flats	S_2	41
Weight	ca. kg	0.99
Coeff. of discharge from 3.0 bar	α_w	0.67

Dimensions in mm.

Safety Valves
Type 06417

Discharge capacities
Calculation of flow rate acc. to AD2000-Merkblatt A2 / DIN EN ISO 4126-1

Medium:
Air in m^3/h at 0°C and 1013.25 mbar

The capacity indicated below is for a fully opened valve.

d_0 - orifice
A_0 - flow area

Set pressure in bar (g)	GW	1/2
	d_0(mm)	10.5
	A_0(mm^2)	86.6
	Medium	**Air**
0.2		25
0.5		48
1.0		75
1.5		100
2.0		124
3.0		171
4.0		214
5.0		259
6.0		302
7.0		346
8.0		391
9.0		434
10.0		479
12.0		567
14.0		655
16.0		742
18.0		830
20.0		927
22.0		1015
24.0		1104
25.0		1148
26.0		-
28.0		-
30.0		-
32.0		-
34.0		-
36.0		-
38.0		-
40.0		-

Safety Valves
Type 06388

Cryogenic Safety Valve, angle type, bronze, PN50, type tested TÜV-SV.780. S/G
Full lift safety valve, orifice d_0=23mm standard safety valve,
with carbon filled PTFE valve seal, orifice d_0=23mm with PCTFE seal, closed bonnet
"cleaned and degreased for oxygen service"

Part No. 06388.X.0000
Inlet: male thread type G (BSPP) acc. to ISO 228/1, Outlet: female thread type G (BSPP) acc. to ISO 228/1
Part No. 06388.X.2000
Inlet: male thread type R (BSPT) acc. to ISO 7/1, Outlet: female thread type G (BSPP) acc. to ISO 228/1
Part No. 06388.X.5000
Inlet: male thread NPT acc. to ANSI B 1.20.1, Outlet: female thread type G (BSPP) acc. to ISO 228/1
Part No. 06388.X.6000
Inlet: male thread NPT acc. to ANSI B 1.20.1, Outlet: female thread NPT acc. to ANSI B 1.20.1
Available options - on request only:
· external parts nickel plated · with installed elbow at the outlet
· with additional drain hole at the outlet (1)

Applications:
Provided as safety device for protection against excessive pressure in stationary and moveable gas cylinders and pressure vessels. Approved for air gases, vapours and cryogenic liquefied gases incl. LNG.
Working temperature: -196°C / -321°F (77K) up to +185°C / +365°F (458K), suitable for horizontal installation

Materials		DIN EN	ASME/ASTM
1	Outlet body	CC491K	B 62 UNS C83600
2	Inlet body	1.4301	SA 479 Grade 304
3	Valve seal	PTFE / Carbon filled (25%) PCTFE ($d_0$23)	
4	Disc	CC493K	SB 505 UNS C93200
5	Guide plate	CC493K	SB 505 UNS C93200
5a	Guide plate from GW 1	CC453K	SB 103 UNS C52100
6	Stem	CW453K	SB 103 UNS C52100
7	Spring	1.4571	A 313 Grade 316Ti
8	Bonnet	1.4308	A 351 CF 8
9	Spring clamp	CW614N	B 455 UNS C38500
10	Thread ring	CW614N	B 455 UNS C38500
11	Cap	CW614N	B 455 UNS C38500

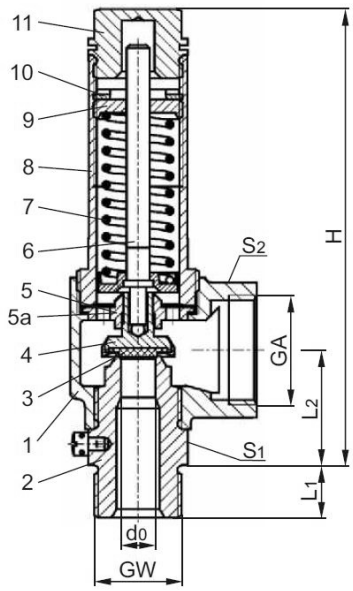

Type 06388	Technical data								
Nominal size	**GW**	**1/2**	**3/4**	**1/2**	**3/4**	**1**	**1-1/4**	**1-1/2**	**2**
Orifice	d_0	7.0	7.0	10.5	10.5	15.0	23.0	23.0	23.0
Dimension code	.X.	0704	0706	1004	1006	1510	2312	2314	2320
Set pressure range	bar	3.3-50.0	3.3-50.0	2.9-50.0	2.9-50.0	2.9-50.0	2.0-50.0	2.0-50.0	2.0-50.0
Outlet	GA	1	1	1	1	1-1/4	2	2	2
Height	H	140	140	140	140	157	218	218	216
Length	L_1	14	16	14	16	18	20	20	25
Length	L_2	36	36	36	36	42	56	56	54
Wrench size across flats	S_1	30	30	30	30	41	55	55	65
Wrench size across flats	S_2	41	41	41	41	50	70	70	70
Weight	ca. kg	0.78	0.80	0.76	0.79	1.27	3.05	3.10	3.30
Coefficient of discharge	α_w	0.82	0.82	0.58	0.58	0.5	0.62	0.62	0.62
Coefficient of discharge	rated slope	0.862	0.862	1.517	1.517	2.769	7.55	7.55	7.55

Dimensions in mm.

Safety Valves
Type 06388

Discharge capacities

Medium:
Air in m^3/h at 0°C and 1013.25 mbar
Air in SCFM at 60°F (15.6°C) and 14.7 psia (1013.25 mbar)

The capacity indicated below is for a fully opened valve.

d_0 - orifice
A_0 - flow area

Calculation of discharge capacity acc. to AD2000-Merkblatt A2 / DIN EN ISO 4126-1 resp. ASME Code Sec. VIII.

Set pressure in bar (g)	GW	1/2 & 3/4	1/2 & 3/4	1	1-1/4, 1-1/2 & 2
	d_0(mm)	7.0	10.5	15.0	23.0
	A_0(mm^2)	38.48	86.59	176.71	415.48
	Medium	**Air in m^3/h**			
2.0		-	-	-	564
2.9		-	139	244	738
3.0		-	143	251	758
3.3		96	154	270	817
4.0		112	179	314	952
5.0		135	215	379	1148
6.0		158	251	442	1342
7.0		181	287	506	1535
8.0		204	324	571	1735
9.0		227	361	634	1929
10.0		250	398	699	2128
12.0		295	470	827	2517
14.0		341	543	955	2907
16.0		387	615	1082	3297
18.0		432	688	1210	3686
20.0		482	767	1350	4115
22.0		528	841	1479	4508
24.0		574	914	1608	4902
26.0		620	987	1737	5295
28.0		666	1060	1865	5688
30.0		719	1144	2013	6139
32.0		765	1218	2143	6536
34.0		812	1292	2273	6933
36.0		858	1366	2403	7330
38.0		905	1440	2533	7727
40.0		959	1527	2686	8194
42.0		1006	1601	2817	8595
44.0		1053	1676	2948	8995
46.0		1100	1750	3079	9396
48.0		1147	1825	3210	9796
50.0		1204	1915	3370	10283

Set pressure in psig	GW	1/2 & 3/4	1/2 & 3/4	1	1-1/4, 1-1/2 & 2
	d_0(inch)	0.276	0.413	0.591	0.906
	A_0(in^2)	0.060	0.134	0.274	0.644
	Medium	**Air in SCFM**			
30		-	-	-	360
40		-	-	-	443
50		60	106	193	526
60		70	122	223	609
70		79	139	254	692
80		89	156	284	775
90		98	172	315	858
100		107	189	345	941
110		117	206	376	1025
120		126	223	406	1108
130		136	239	437	1191
140		145	256	467	1274
150		155	273	498	1357
175		179	314	574	1564
200		202	356	650	1772
225		226	398	726	1980
250		250	439	802	2187
275		273	481	878	2395
300		297	523	954	2602
325		321	565	1031	2810
350		345	606	1107	3018
375		368	648	1183	3225
400		392	690	1259	3433
425		416	731	1335	3641
450		439	773	1411	3848
475		463	815	1488	4056
500		487	857	1564	4263
525		510	898	1640	4471
550		534	940	1716	4679
575		558	982	1792	4886
600		582	1024	1868	5094
625		605	1065	1944	5302
650		629	1107	2021	5509
675		653	1149	2097	5717
700		676	1190	2173	5924
725		700	1232	2249	6132

Safety Valves
Type 06388

Cryogenic Safety Valve, angle type, bronze, PN50, type tested TÜV-SV.780. S/G
Full lift safety valve, orifice d_0=23mm standard safety valve,
with carbon filled PTFE valve seal, orifice d_0=23mm with PCTFE seal, closed bonnet
"cleaned and degreased for oxygen service"

Part No. 06388.X.0040
Inlet: male thread type G (BSPP) acc. to ISO 228/1, Outlet: female thread type G (BSPP) acc. to ISO 228/1
Part No. 06388.X.2040
Inlet: male thread type R (BSPT) acc. to ISO 7/1, Outlet: female thread type G (BSPP) acc. to ISO 228/1
Part No. 06388.X.5040
Inlet: male thread NPT acc. to ANSI B 1.20.1, Outlet: female thread type G (BSPP) acc. to ISO 228/1
Part No. 06388.X.6040
Inlet: male thread NPT acc. to ANSI B 1.20.1, Outlet: female thread NPT acc. to ANSI B 1.20.1
Available options - on request only:
· external parts nickel plated · with installed elbow at the outlet
· with additional drain hole at the outlet (1)

Applications:
Provided as safety device for protection against excessive pressure in stationary and moveable gas cylinders and pressure vessels. Approved for air gases, vapours and cryogenic liquefied gases incl. LNG.
Working temperature: -196°C / -321°F (77K) up to +185°C / +365°F (458K), suitable for horizontal installation

Materials		DIN EN	ASME/ASTM
1	Outlet body	CC491K	B 62 UNS C83600
2	Inlet body	CW614N	B 455 UNS C38500
3	Valve seal	PTFE / Carbon filled (25%) PCTFE ($d_0$23)	
4	Disc	CC493K	SB 505 UNS C93200
5	Guide plate	CC493K	SB 505 UNS C93200
5a	Guide plate from GW 1	CC453K	SB 103 UNS C52100
6	Stem	CW453K	SB 103 UNS C52100
7	Spring	1.4571	A 313 Grade 316Ti
8	Bonnet	1.4308	A 351 CF 8
9	Spring clamp	CW614N	B 455 UNS C38500
10	Thread ring	CW614N	B 455 UNS C38500
11	Cap	CW614N	B 455 UNS C38500

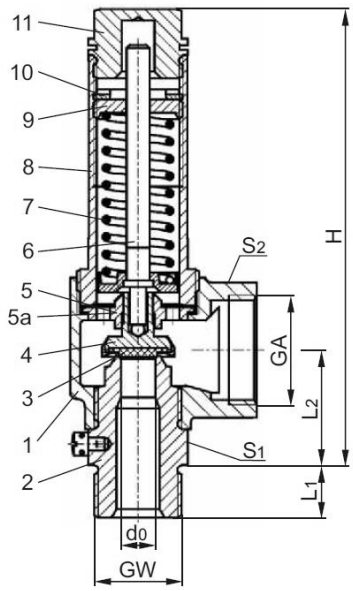

Type 06388	Technical data								
Nominal size	**GW**	**1/2**	**3/4**	**1/2**	**3/4**	**1**	**1-1/4**	**1-1/2**	**2**
Orifice	d_0	7.0	7.0	10.5	10.5	15.0	23.0	23.0	23.0
Dimension code	.X.	0704	0706	1004	1006	1510	2312	2314	2320
Set pressure range	bar	3.3-50.0	3.3-50.0	2.9-50.0	2.9-50.0	2.9-50.0	2.0-50.0	2.0-50.0	2.0-50.0
Outlet	GA	1	1	1	1	1-1/4	2	2	2
Height	H	140	140	140	140	157	218	218	216
Length	L_1	14	16	14	16	18	20	20	25
Length	L_2	36	36	36	36	42	56	56	54
Wrench size across flats	S_1	30	30	30	30	41	55	55	65
Wrench size across flats	S_2	41	41	41	41	50	70	70	70
Weight	ca. kg	0.78	0.80	0.76	0.79	1.27	3.05	3.10	3.30
Coefficient of discharge	α_w	0.82	0.82	0.58	0.58	0.5	0.62	0.62	0.62
Coefficient of discharge	rated slope	0.862	0.862	1.517	1.517	2.769	7.55	7.55	7.55

Dimensions in mm.

Safety Valves
Type 06388

Discharge capacities

Medium:
Air in m^3/h at 0°C and 1013.25 mbar
Air in SCFM at 60°F (15.6°C) and 14.7 psia (1013.25 mbar)

The capacity indicated below is for a fully opened valve.

d_0 - orifice
A_0 - flow area

Calculation of discharge capacity acc. to AD2000-Merkblatt A2 / DIN EN ISO 4126-1 resp. ASME Code Sec. VIII.

Set pressure in bar (g)	GW	1/2 & 3/4	1/2 & 3/4	1	1-1/4, 1-1/2 & 2
	d_0(mm)	7.0	10.5	15.0	23.0
	A_0(mm^2)	38.48	86.59	176.71	415.48
	Medium	**Air in m^3/h**			
2.0		-	-	-	564
2.9		-	139	244	738
3.0		-	143	251	758
3.3		96	154	270	817
4.0		112	179	314	952
5.0		135	215	379	1148
6.0		158	251	442	1342
7.0		181	287	506	1535
8.0		204	324	571	1735
9.0		227	361	634	1929
10.0		250	398	699	2128
12.0		295	470	827	2517
14.0		341	543	955	2907
16.0		387	615	1082	3297
18.0		432	688	1210	3686
20.0		482	767	1350	4115
22.0		528	841	1479	4508
24.0		574	914	1608	4902
26.0		620	987	1737	5295
28.0		666	1060	1865	5688
30.0		719	1144	2013	6139
32.0		765	1218	2143	6536
34.0		812	1292	2273	6933
36.0		858	1366	2403	7330
38.0		905	1440	2533	7727
40.0		959	1527	2686	8194
42.0		1006	1601	2817	8595
44.0		1053	1676	2948	8995
46.0		1100	1750	3079	9396
48.0		1147	1825	3210	9796
50.0		1204	1915	3370	10283

Set pressure in psig	GW	1/2 & 3/4	1/2 & 3/4	1	1-1/4, 1-1/2 & 2
	d_0(inch)	0.276	0.413	0.591	0.906
	A_0(in^2)	0.060	0.134	0.274	0.644
	Medium	**Air in SCFM**			
30		-	-	-	360
40		-	-	-	443
50		60	106	193	526
60		70	122	223	609
70		79	139	254	692
80		89	156	284	775
90		98	172	315	858
100		107	189	345	941
110		117	206	376	1025
120		126	223	406	1108
130		136	239	437	1191
140		145	256	467	1274
150		155	273	498	1357
175		179	314	574	1564
200		202	356	650	1772
225		226	398	726	1980
250		250	439	802	2187
275		273	481	878	2395
300		297	523	954	2602
325		321	565	1031	2810
350		345	606	1107	3018
375		368	648	1183	3225
400		392	690	1259	3433
425		416	731	1335	3641
450		439	773	1411	3848
475		463	815	1488	4056
500		487	857	1564	4263
525		510	898	1640	4471
550		534	940	1716	4679
575		558	982	1792	4886
600		582	1024	1868	5094
625		605	1065	1944	5302
650		629	1107	2021	5509
675		653	1149	2097	5717
700		676	1190	2173	5924
725		700	1232	2249	6132

Safety Valves
Type 06389

Cryogenic Safety Valve, angle type, bronze, PN40, type tested TÜV-SV.780. S/G
Standard safety valve with carbon filled PTFE valve seal,
orifice d_0=10mm with PTFE seal, closed bonnet
"cleaned and degreased for oxygen service"
Part No. 06389.X.0000
Inlet: male thread type G (BSPP) acc. to ISO 228/1, Outlet: male thread type G (BSPP) acc. to ISO 228/1
Part No. 06389.X.2000
Inlet: male thread type R (BSPT) acc. to ISO 7/1, Outlet: male thread type G (BSPP) acc. to ISO 228/1
Part No. 06389.X.5000
Inlet: male thread NPT acc. to ANSI B 1.20.1, Outlet: male thread type G (BSPP) acc. to ISO 228/1

Available options - on request only:
· external parts nickel plated

Connection size	D_0	Setting range	Seal	Alpha value
1/2"-3/4"	7	20.00 - 25.00 bar	PTFE - Carbon	0.64
1/2"-3/4"	10.5	1.80 - 5.99 bar	Sintimid	0.64
1/2"-3/4"	10.5	6.00 - 40.00 bar	PTFE - Carbon	0.54

Applications:
Provided as safety device for protection against excessive pressure in stationary and moveable gas cylinders and pressure vessels. Approved for air gases, vapours and cryogenic liquefied gases incl. LNG.
Working temperature: -196°C / -321°F (77K) up to +185°C / +365°F (458K), suitable for horizontal installation

Materials		DIN EN	ASME/ASTM
1	Outlet body	CC491K	B 62 UNS C83600
2	Inlet body	CW614N	B 455 UNS C38500
3	Valve seal	PTFE / Carbon filled (25%)	
4a	Disc set pressure range 1.8-5.99 bar	Tecasint 1021	
4b	Disc set pressure range 6.0-40.0 bar	CC493K	B 505 UNS C93200
5	Guide plate	CW453K	B 103 UNS C52100
6	Stem	CW453K	B 103 UNS C52100
7	Spring	1.4571	A 313 Grade 316Ti
8	Bonnet	1.4308	A 351 CF 8
9	Spring clamp	CW614N	B 455 UNS C38500
10	Thread ring	CW614N	B 455 UNS C38500
11	Cap	CW614N	B 455 UNS C38500

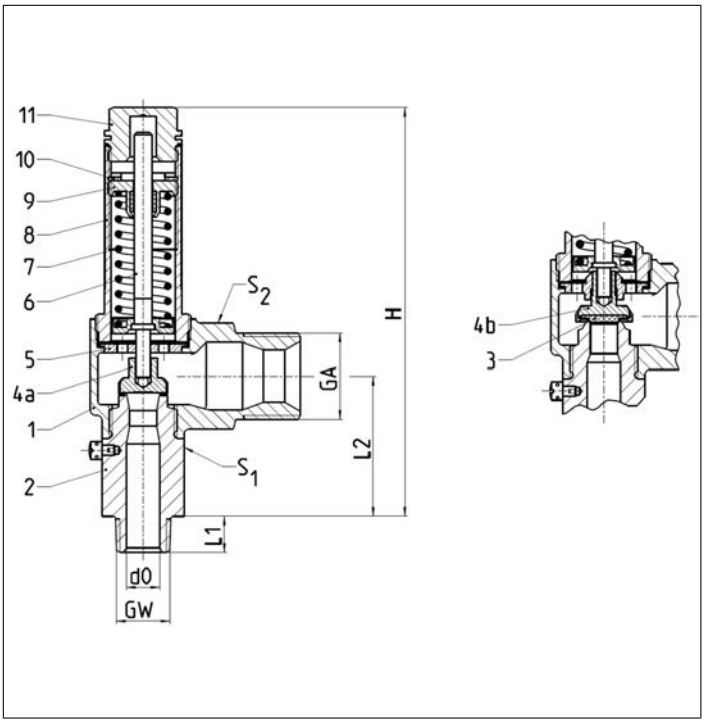

Type 06389	Technical data				
Nominal size	**GW**	**1/2**	**3/4**	**1/2**	**3/4**
Orifice	d_0	7.0	7.0	10.5	10.5
Dimension code	.X.	0704	0706	1004	1006
Set pressure range	bar	1.8-40.0	1.8-40.0	1.8-40.0	1.8-40.0
Outlet	GA	1	1	1	1
Height	H	158	158	158	158
Length	L_1	14	16	14	16
Length	L_2	54	54	54	54
Wrench size across flats	S_1	32	32	32	32
Wrench size across flats	S_2	41	41	41	41
Weight	ca. kg	1.00	1.00	1.00	1.00
Coefficient of discharge	α_w	0.64	0.64	0.54	0.54
Coefficient of discharge	rated slope	0.862	0.862	1.517	1.517

Dimensions in mm.

Safety Valves
Type 06389

Discharge capacities

Medium:
Air in m^3/h at 0°C and 1013.25 mbar

The capacity indicated below is for a fully opened valve.

d_0 - orifice
A_0 - flow area

Set pressure in bar (g)	GW	1/2 & 3/4	1/2 & 3/4
	d_0(mm)	7.0	10.5
	A_0(mm^2)	38.48	86.59
	Medium	**Air in m^3/h**	
2.0		-	-
2.9		-	139
3.0		-	143
3.3		96	154
4.0		112	179
5.0		135	215
6.0		158	251
7.0		181	287
8.0		204	324
9.0		227	361
10.0		250	398
12.0		295	470
14.0		341	543
16.0		387	615
18.0		432	688
20.0		482	767
22.0		528	841
24.0		574	914
26.0		620	987
28.0		666	1060
30.0		719	1144
32.0		765	1218
34.0		812	1292
36.0		858	1366
38.0		905	1440
40.0		959	1527

Safety Valves
Type 06418

Cryogenic Safety Valve, angle type, bronze, PN50, type tested TÜV-SV.780. S/G
Full lift safety valve, orifice d_0=23mm standard safety valve,
with carbon filled PTFE valve seal, orifice d_0=23mm with PCTFE seal, closed bonnet, with lifting device
"cleaned and degreased for oxygen service"

Part No. 06418.X.0000
Inlet: male thread type G (BSPP) acc. to ISO 228/1, Outlet: female thread type G (BSPP) acc. to ISO 228/1
Part No. 06418.X.2000
Inlet: male thread type R (BSPT) acc. to ISO 7/1, Outlet: female thread type G (BSPP) acc. to ISO 228/1
Part No. 06418.X.5000
Inlet: male thread NPT acc. to ANSI B 1.20.1, Outlet: female thread type G (BSPP) acc. to ISO 228/1
Part No. 06418.X.6000
Inlet: male thread NPT acc. to ANSI B 1.20.1, Outlet: female thread NPT acc. to ANSI B 1.20.1
Available options - on request only:
· external parts nickel plated · with installed elbow at the outlet

Applications:
Provided as safety device for protection against excessive pressure in stationary and moveable gas cylinders and pressure vessels. Approved for air gases, vapours and cryogenic liquefied gases incl. LNG.
Working temperature: -196°C / -321°F (77K) up to +185°C / +365°F (458K), suitable for horizontal installation

Materials		DIN EN	ASME/ASTM
1	Outlet body	CC491K	B 62 UNS C83600
2	Inlet body	1.4301	SA 479 Grade 304
3	Valve seal	PTFE / Carbon filled (25%) PCTFE ($d_0$23)	
4	Disc	CC493K	SB 505 UNS C93200
5	Guide plate	CC493K	SB 505 UNS C93200
5a	Guide plate from GW 1	CW453K	SB 103 UNS C52100
6	Stem	CW453K	SB 103 UNS C52100
7	Spring	1.4571	A 313 Grade 316Ti
8	Bonnet	1.4308	A 351 CF 8
9	Spring clamp	CW614N	B 455 UNS C38500
10	Thread ring	CW614N	B 455 UNS C38500
11	Lifting cap	CW614N	B 455 UNS C38500
12	Lifting spring	1.4571	A 313 Grade 316Ti
13	Lifting stem	CW614N	B 455 UNS C38500
14	Lever	1.4408	A 351 CF8M

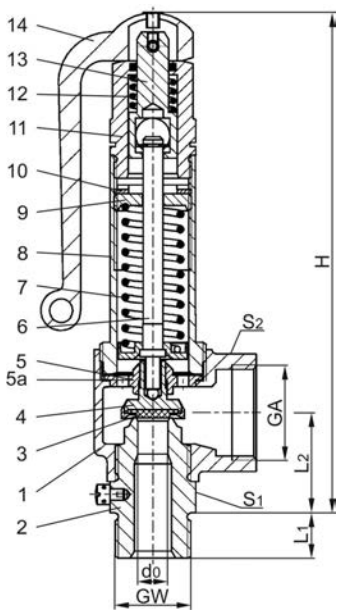

Type 06418	Technical data								
Nominal size	**GW**	**1/2**	**3/4**	**1/2**	**3/4**	**1**	**1-1/4**	**1-1/2**	**2**
Orifice	d_0	7.0	7.0	10.5	10.5	15.0	23.0	23.0	23.0
Dimension code	.X.	0704	0706	1004	1006	1510	2312	2314	2320
Set pressure range	bar	3.3-50.0	3.3-50.0	2.9-50.0	2.9-50.0	2.9-50.0	2.0-50.0	2.0-50.0	2.0-50.0
Outlet	GA	1	1	1	1	1-1/4	2	2	2
Height	H	175	175	175	175	194	270	270	268
Length	L_1	14	16	14	16	18	20	20	25
Length	L_2	36	36	36	36	42	56	56	54
Wrench size across flats	S_1	30	30	30	30	41	55	55	65
Wrench size across flats	S_2	41	41	41	41	50	70	70	70
Weight	ca. kg	1.00	1.02	0.98	1.01	1.52	3.80	3.85	4.28
Coefficient of discharge	α_w	0.82	0.82	0.58	0.58	0.5	0.62	0.62	0.62
Coefficient of discharge	rated slope	0.862	0.862	1.517	1.517	2.769	7.55	7.55	7.55

Dimensions in mm.

Safety Valves
Type 06418

Discharge capacities

Medium:
Air in m^3/h at 0°C and 1013.25 mbar
Air in SCFM at 60°F (15.6°C) and 14.7 psia (1013.25 mbar)

The capacity indicated below is for a fully opened valve.

d_0 - orifice
A_0 - flow area

Calculation of discharge capacity acc. to AD2000-Merkblatt A2 / DIN EN ISO 4126-1 resp. ASME Code Sec. VIII.

Set pressure in bar (g)	GW	1/2 & 3/4	1/2 & 3/4	1	1-1/4, 1-1/2 & 2
	d_0(mm)	7.0	10.5	15.0	23.0
	A_0(mm^2)	38.48	86.59	176.71	415.48
	Medium	**Air in m^3/h**			
2.0		-	-	-	564
2.9		-	139	244	738
3.0		-	143	251	758
3.3		96	154	270	817
4.0		112	179	314	952
5.0		135	215	379	1148
6.0		158	251	442	1342
7.0		181	287	506	1535
8.0		204	324	571	1735
9.0		227	361	634	1929
10.0		250	398	699	2128
12.0		295	470	827	2517
14.0		341	543	955	2907
16.0		387	615	1082	3297
18.0		432	688	1210	3686
20.0		482	767	1350	4115
22.0		528	841	1479	4508
24.0		574	914	1608	4902
26.0		620	987	1737	5295
28.0		666	1060	1865	5688
30.0		719	1144	2013	6139
32.0		765	1218	2143	6536
34.0		812	1292	2273	6933
36.0		858	1366	2403	7330
38.0		905	1440	2533	7727
40.0		959	1527	2686	8194
42.0		1006	1601	2817	8595
44.0		1053	1676	2948	8995
46.0		1100	1750	3079	9396
48.0		1147	1825	3210	9796
50.0		1204	1915	3370	10283

Set pressure in psig	GW	1/2 & 3/4	1/2 & 3/4	1	1-1/4, 1-1/2 & 2
	d_0(inch)	0.276	0.413	0.591	0.906
	A_0(in^2)	0.060	0.134	0.274	0.644
	Medium	**Air in SCFM**			
30		-	-	-	360
40		-	-	-	443
50		60	106	193	526
60		70	122	223	609
70		79	139	254	692
80		89	156	284	775
90		98	172	315	858
100		107	189	345	941
110		117	206	376	1025
120		126	223	406	1108
130		136	239	437	1191
140		145	256	467	1274
150		155	273	498	1357
175		179	314	574	1564
200		202	356	650	1772
225		226	398	726	1980
250		250	439	802	2187
275		273	481	878	2395
300		297	523	954	2602
325		321	565	1031	2810
350		345	606	1107	3018
375		368	648	1183	3225
400		392	690	1259	3433
425		416	731	1335	3641
450		439	773	1411	3848
475		463	815	1488	4056
500		487	857	1564	4263
525		510	898	1640	4471
550		534	940	1716	4679
575		558	982	1792	4886
600		582	1024	1868	5094
625		605	1065	1944	5302
650		629	1107	2021	5509
675		653	1149	2097	5717
700		676	1190	2173	5924
725		700	1232	2249	6132

Safety Valves
Type 06418

Cryogenic Safety Valve, angle type, bronze, PN50, type tested TÜV-SV.780. S/G
Full lift safety valve, orifice d_0=23mm standard safety valve,
with carbon filled PTFE valve seal, orifice d_0=23mm with PCTFE seal, closed bonnet, with lifting device
"cleaned and degreased for oxygen service"

Part No. 06418.X.0040
Inlet: male thread type G (BSPP) acc. to ISO 228/1, Outlet: female thread type G (BSPP) acc. to ISO 228/1
Part No. 06418.X.2040
Inlet: male thread type R (BSPT) acc. to ISO 7/1, Outlet: female thread type G (BSPP) acc. to ISO 228/1
Part No. 06418.X.5040
Inlet: male thread NPT acc. to ANSI B 1.20.1, Outlet: female thread type G (BSPP) acc. to ISO 228/1
Part No. 06418.X.6040
Inlet: male thread NPT acc. to ANSI B 1.20.1, Outlet: female thread NPT acc. to ANSI B 1.20.1
Available options - on request only:
· external parts nickel plated · with installed elbow at the outlet

Applications:
Provided as safety device for protection against excessive pressure in stationary and moveable gas cylinders and pressure vessels. Approved for air gases, vapours and cryogenic liquefied gases incl. LNG.
Working temperature: -196°C / -321°F (77K) up to +185°C / +365°F (458K), suitable for horizontal installation

Materials		DIN EN	ASME/ASTM
1	Outlet body	CC491K	B 62 UNS C83600
2	Inlet body	CW614N	B 455 UNS C38500
3	Valve seal	PTFE / Carbon filled (25%) PCTFE ($d_0$23)	
4	Disc	CC493K	SB 505 UNS C93200
5	Guide plate	CC493K	SB 505 UNS C93200
5a	Guide plate from GW 1	CW453K	SB 103 UNS C52100
6	Stem	CW453K	SB 103 UNS C52100
7	Spring	1.4571	A 313 Grade 316Ti
8	Bonnet	1.4308	A 351 CF 8
9	Spring clamp	CW614N	B 455 UNS C38500
10	Thread ring	CW614N	B 455 UNS C38500
11	Lifting cap	CW614N	B 455 UNS C38500
12	Lifting spring	1.4571	A 313 Grade 316Ti
13	Lifting stem	CW614N	B 455 UNS C38500
14	Lever	1.4408	A 351 CF8M

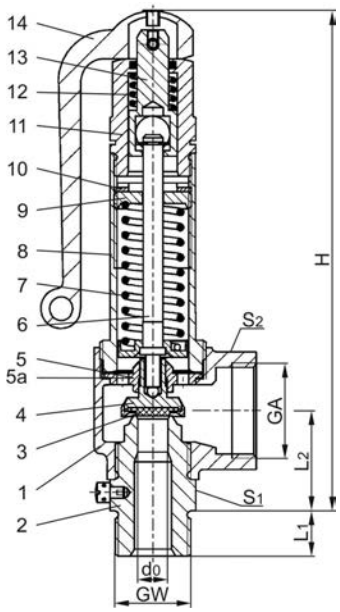

Type 06418	Technical data								
Nominal size	**GW**	**1/2**	**3/4**	**1/2**	**3/4**	**1**	**1-1/4**	**1-1/2**	**2**
Orifice	d_0	7.0	7.0	10.5	10.5	15.0	23.0	23.0	23.0
Dimension code	.X.	0704	0706	1004	1006	1510	2312	2314	2320
Set pressure range	bar	3.3-50.0	3.3-50.0	2.9-50.0	2.9-50.0	2.9-50.0	2.0-50.0	2.0-50.0	2.0-50.0
Outlet	GA	1	1	1	1	1-1/4	2	2	2
Height	H	175	175	175	175	194	270	270	268
Length	L_1	14	16	14	16	18	20	20	25
Length	L_2	36	36	36	36	42	56	56	54
Wrench size across flats	S_1	30	30	30	30	41	55	55	65
Wrench size across flats	S_2	41	41	41	41	50	70	70	70
Weight	ca. kg	1.00	1.02	0.98	1.01	1.52	3.80	3.85	4.28
Coefficient of discharge	α_w	0.82	0.82	0.58	0.58	0.5	0.62	0.62	0.62
Coefficient of discharge	rated slope	0.862	0.862	1.517	1.517	2.769	7.55	7.55	7.55

Dimensions in mm.

Safety Valves
Type 06418

Discharge capacities

Medium:
Air in m^3/h at 0°C and 1013.25 mbar
Air in SCFM at 60°F (15.6°C) and 14.7 psia (1013.25 mbar)

The capacity indicated below is for a fully opened valve.

d_0 - orifice
A_0 - flow area

Calculation of discharge capacity acc. to AD2000-Merkblatt A2 / DIN EN ISO 4126-1 resp. ASME Code Sec. VIII.

Set pressure in bar (g)	GW	1/2 & 3/4	1/2 & 3/4	1	1-1/4, 1-1/2 & 2
	d_0(mm)	7.0	10.5	15.0	23.0
	A_0(mm^2)	38.48	86.59	176.71	415.48
	Medium	**Air in m^3/h**			
2.0		-	-	-	564
2.9		-	139	244	738
3.0		-	143	251	758
3.3		96	154	270	817
4.0		112	179	314	952
5.0		135	215	379	1148
6.0		158	251	442	1342
7.0		181	287	506	1535
8.0		204	324	571	1735
9.0		227	361	634	1929
10.0		250	398	699	2128
12.0		295	470	827	2517
14.0		341	543	955	2907
16.0		387	615	1082	3297
18.0		432	688	1210	3686
20.0		482	767	1350	4115
22.0		528	841	1479	4508
24.0		574	914	1608	4902
26.0		620	987	1737	5295
28.0		666	1060	1865	5688
30.0		719	1144	2013	6139
32.0		765	1218	2143	6536
34.0		812	1292	2273	6933
36.0		858	1366	2403	7330
38.0		905	1440	2533	7727
40.0		959	1527	2686	8194
42.0		1006	1601	2817	8595
44.0		1053	1676	2948	8995
46.0		1100	1750	3079	9396
48.0		1147	1825	3210	9796
50.0		1204	1915	3370	10283

Set pressure in psig	GW	1/2 & 3/4	1/2 & 3/4	1	1-1/4, 1-1/2 & 2
	d_0(inch)	0.276	0.413	0.591	0.906
	A_0(in^2)	0.060	0.134	0.274	0.644
	Medium	**Air in SCFM**			
30		-	-	-	360
40		-	-	-	443
50		60	106	193	526
60		70	122	223	609
70		79	139	254	692
80		89	156	284	775
90		98	172	315	858
100		107	189	345	941
110		117	206	376	1025
120		126	223	406	1108
130		136	239	437	1191
140		145	256	467	1274
150		155	273	498	1357
175		179	314	574	1564
200		202	356	650	1772
225		226	398	726	1980
250		250	439	802	2187
275		273	481	878	2395
300		297	523	954	2602
325		321	565	1031	2810
350		345	606	1107	3018
375		368	648	1183	3225
400		392	690	1259	3433
425		416	731	1335	3641
450		439	773	1411	3848
475		463	815	1488	4056
500		487	857	1564	4263
525		510	898	1640	4471
550		534	940	1716	4679
575		558	982	1792	4886
600		582	1024	1868	5094
625		605	1065	1944	5302
650		629	1107	2021	5509
675		653	1149	2097	5717
700		676	1190	2173	5924
725		700	1232	2249	6132

Safety Valves
Type 06381

Cryogenic Safety Valves, angle type, stainless steel, PN40, type tested TÜV-SV.780. S/G
Standard safety valve
Metal to metal seated, closed bonnet
"cleaned and degreased for oxygen service"
Part No. 06381.X.0000
Inlet: male thread type G (BSPP) acc. to ISO 228/1, Outlet: female thread type G (BSPP) acc. to ISO 228/1
Part No. 06381.X.2000
Inlet: male thread type R (BSPT) acc. to ISO 7/1, Outlet: female thread type G (BSPP) acc. to ISO 228/1
Part No. 06381.X.5000
Inlet: male thread NPT acc. to ANSI B 1.20.1, Outlet: female thread type G (BSPP) acc. to ISO 228/1
Part No. 06381.X.6000
Inlet: male thread NPT acc. to ANSI B 1.20.1, Outlet: female thread NPT acc. to ANSI B 1.20.1

Applications:
Provided as safety device for protection against excessive pressure in stationary and moveable gas cylinders and pressure vessels. Approved for air gases, vapours and cryogenic liquefied gases incl. LNG.
Working temperature: -196°C / -321°F (77K) up to +185°C / +365°F (458K)

Materials		DIN EN	ASME/ASTM
1	Outlet body	1.4308	A 351 CF8
2	Inlet body	1.4301	A 276 Grade 304
4	Disc	1.4541	A 276 Grade 321
5	Guide plate	1.4301	A 276 Grade 304
6	Stem	1.4301	A 276 Grade 304
7	Spring	1.4571	A 313 Grade 316Ti
8	Bonnet	1.4308	A 351 CF8
9	Spring clamp	1.4301	A 276 Grade 304
10	Thread ring	1.4301	A 276 Grade 304
11	Cap	1.4301	A 276 Grade 304

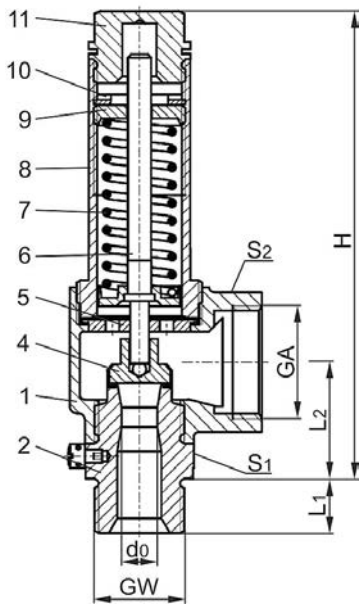

Type 06381	Technical data		
Nominal size	**GW**	**1/2**	**3/4**
Orifice	d_0	10.5	10.5
Dimension code	.X.	1004	1006
Set pressure range	bar	0.2-25.0	0.2-25.0
Outlet	GA	1	1
Height	H	140	140
Length	L_1	14	16
Length	L_2	36	36
Wrench size across flats	S_1	30	30
Wrench size across flats	S_2	41	41
Weight	ca. kg	0.75	0.78
Coeff. of discharge from 3.0 bar	α_w	0.67	0.67

Dimensions in mm.

Safety Valves
Type 06381

Discharge capacities

Medium:
Air in m^3/h at 0°C and 1013.25 mbar
Air in SCFM at 60°F (15.6°C) and 14.7 psia (1013.25 mbar)

The capacity indicated below is for a fully opened valve.

d_0 - orifice
A_0 - flow area

Calculation of discharge capacity acc. to AD2000-Merkblatt A2 / DIN EN ISO 4126-1 resp. ASME Code Sec. VIII.

Set pressure in bar (g)	GW	1/2 & 3/4
	d_0(mm)	10.5
	A_0(mm^2)	86.6
	Medium	**Air in m^3/h**
0.2		25
0.5		48
1.0		75
1.5		100
2.0		124
3.0		171
4.0		214
5.0		259
6.0		302
7.0		346
8.0		391
9.0		434
10.0		479
12.0		567
14.0		655
16.0		742
18.0		830
20.0		927
22.0		1015
24.0		1104
25.0		1148

Set pressure in psig	GW	1/2 & 3/4
	d_0(inch)	0.413
	A_0(in^2)	0.134
	Medium	**Air in SCFM**
30		81
40		100
50		118
60		137
70		156
80		175
90		193
100		212
120		249
140		287
160		324
180		362
200		399
220		436
240		474
260		511
280		549
300		586
320		623
340		661
363		704

Safety Valves
Type 06382

Safety Valves, stainless steel, PN40, type tested TÜV-SV.780. S/G
Standard safety valve
with carbon filled PTFE valve seal, orifice d_0 = 10,5 mm,
closed bonnet, "cleaned and degreased for oxygen service"

Part No. 06382.1015.0000

Applications:
Provided as safety device for protection against excessive pressure in stationary and moveable gas cylinders and pressure vessels. Approved for air gases, vapours and cryogenic liquefied gases incl. LNG.
Working temperature: -196°C / -321°F (77K) up to +185°C / +365°F (458K)

Materials		DIN EN	ASME/ASTM
1	Outlet body	1.4404	316L
1	Inlet body	1.4404	A 276 Grade 304
4	Disc	1.4404/PTFE	316/PTFE
5	Guide plate	1.4404	316L
6	Stem	1.4301	A 479 Grade 304
7	Spring	1.4571	A 313 Grade 316Ti
8	Bonnet	1.4404	316L
9	Spring clamp	1.4301	A 479 Grade 304
10	Thread ring	1.4301	A 479 Grade 304
11	Cap	1.4404	316L

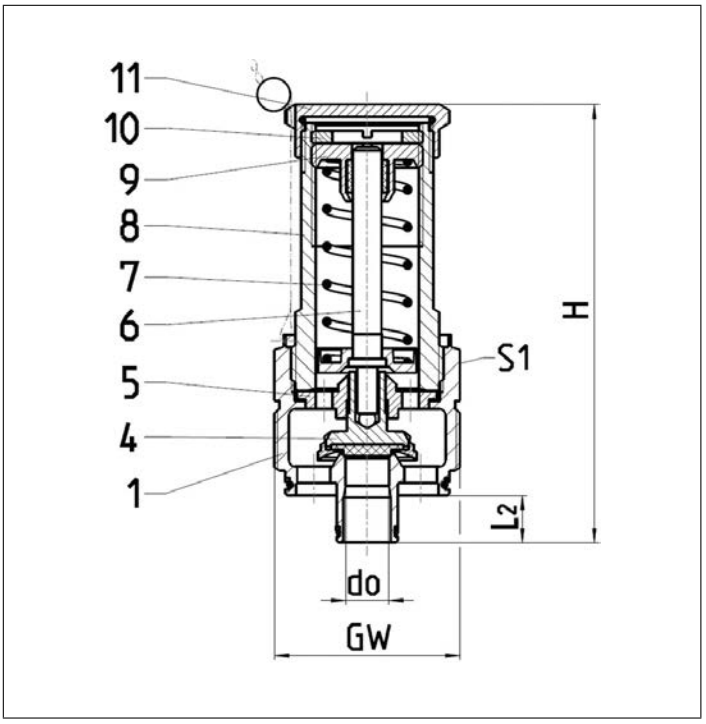

Type 06381	Technical data	
Nominal size	**GW**	**M45x1,5**
Orifice	d_0	10.5
Set pressure range	bar	6-40.0
Height	H	107
Length	L_2	11.5
Weight	ca. kg	0.51
Coeff. of discharge from 3.0 bar	α_w	0.58

Dimensions in mm.

Safety Valves
Type 06382

Discharge capacities

Medium:
Air in m^3/h at 0°C and 1013.25 mbar

The capacity indicated below is for a fully opened valve.

d_0 - orifice
A_0 - flow area

Calculation of discharge capacity acc. to AD2000-Merkblatt A2 / DIN EN ISO 4126-1.

Set pressure in bar (g)	GW	M45x1.5
	d_0(mm)	10.5
	A_0(mm^2)	86.6
	Medium	**Air in m^3/h**
6.0		251
7.0		287
8.0		324
9.0		361
10.0		398
12.0		470
14.0		543
16.0		615
18.0		688
20.0		767
22.0		841
24.0		914
26.0		987
28.0		1060
30.0		1144
32.0		1218
34.0		1292
36.0		1366
38.0		1440
40.0		1527

Safety Valves
Type 06383

Cryogenic Safety Valves, angle type, stainless steel, PN50, type tested TÜV-SV.780. S/G
Full lift safety valve, orifice d_0=23mm standard safety valve,
with carbon filled PTFE valve seal, orifice d_0=23mm with PCTFE seal, closed bonnet
"cleaned and degreased for oxygen service"

Part No. 06383.X.0000
Inlet: male thread type G (BSPP) acc. to ISO 228/1, Outlet: female thread type G (BSPP) acc. to ISO 228/1

Part No. 06383.X.2000
Inlet: male thread type R (BSPT) acc. to ISO 7/1, Outlet: female thread type G (BSPP) acc. to ISO 228/1

Part No. 06383.X.5000
Inlet: male thread NPT acc. to ANSI B 1.20.1, Outlet: female thread type G (BSPP) acc. to ISO 228/1

Part No. 06383.X.6000
Inlet: male thread NPT acc. to ANSI B 1.20.1, Outlet: female thread NPT acc. to ANSI B 1.20.1

Applications:
Provided as safety device for protection against excessive pressure in stationary and moveable gas cylinders and pressure vessels. Approved for air gases, vapours and cryogenic liquefied gases incl. LNG.
Working temperature: -196°C / -321°F (77K) up to +185°C / +365°F (458K), suitable for horizontal installation

Materials		DIN EN	ASME/ASTM
1	Outlet body	1.4308	A 351 CF8
2	Inlet body	1.4301	A 479 Grade 304
3	Valve seal	PTFE / Carbon filled (25%) PCTFE ($d_0$23)	
4	Disc	1.4301	A 479 Grade 304
5	Guide plate	1.4301	A 479 Grade 304
6	Stem	1.4301	A 479 Grade 304
7	Spring	1.4571	A 313 Grade 316Ti
8	Bonnet	1.4308	A 351 CF8
9	Spring clamp	1.4301	A 479 Grade 304
10	Thread ring	1.4301	A 479 Grade 304
11	Cap	1.4301	A 479 Grade 304

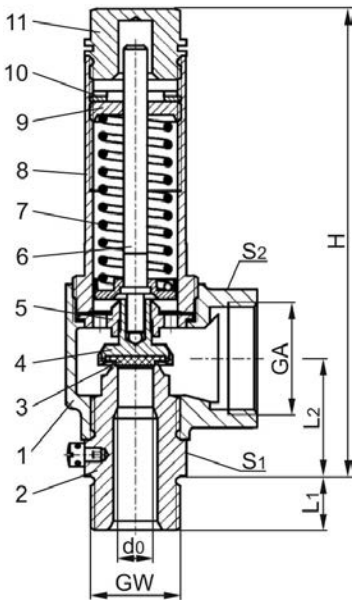

Type 06383	Technical data								
Nominal size	**GW**	**1/2**	**3/4**	**1/2**	**3/4**	**1**	**1-1/4**	**1-1/2**	**2**
Orifice	d_0	7.0	7.0	10.5	10.5	15.0	23.0	23.0	23.0
Dimension code	.X.	0704	0706	1004	1006	1510	2312	2314	2320
Set pressure range	bar	3.3-50.0	3.3-50.0	2.9-50.0	2.9-50.0	2.9-50.0	2.0-50.0	2.0-50.0	2.0-50.0
Outlet	GA	1	1	1	1	1-1/4	2	2	2
Height	H	140	140	140	140	157	218	218	216
Length	L_1	14	16	14	16	18	20	20	25
Length	L_2	36	36	36	36	42	56	56	54
Wrench size across flats	S_1	30	30	30	30	41	55	55	65
Wrench size across flats	S_2	41	41	41	41	50	70	70	70
Weight	ca. kg	0.78	0.80	0.76	0.79	1.27	3.05	3.10	3.30
Coefficient of discharge	α_w	0.82	0.82	0.58	0.58	0.5	0.62	0.62	0.62
Coefficient of discharge	rated slope	0.862	0.862	1.517	1.517	2.769	7.55	7.55	7.55

Dimensions in mm.

Safety Valves
Type 06383

Discharge capacities

Medium:
Air in m^3/h at 0°C and 1013.25 mbar
Air in SCFM at 60°F (15.6°C) and 14.7 psia (1013.25 mbar)

The capacity indicated below is for a fully opened valve.

d_0 - orifice
A_0 - flow area

Calculation of discharge capacity acc. to AD2000-Merkblatt A2 / DIN EN ISO 4126-1 resp. ASME Code Sec. VIII.

Set pressure in bar (g)	GW	1/2 & 3/4	1/2 & 3/4	1	1-1/4, 1-1/2 & 2
	d_0(mm)	7.0	10.5	15.0	23.0
	A_0(mm^2)	38.48	86.59	176.71	415.48
	Medium	**Air in m^3/h**			
2.0		-	-	-	564
2.9		-	139	244	738
3.0		-	143	251	758
3.3		96	154	270	817
4.0		112	179	314	952
5.0		135	215	379	1148
6.0		158	251	442	1342
7.0		181	287	506	1535
8.0		204	324	571	1735
9.0		227	361	634	1929
10.0		250	398	699	2128
12.0		295	470	827	2517
14.0		341	543	955	2907
16.0		387	615	1082	3297
18.0		432	688	1210	3686
20.0		482	767	1350	4115
22.0		528	841	1479	4508
24.0		574	914	1608	4902
26.0		620	987	1737	5295
28.0		666	1060	1865	5688
30.0		719	1144	2013	6139
32.0		765	1218	2143	6536
34.0		812	1292	2273	6933
36.0		858	1366	2403	7330
38.0		905	1440	2533	7727
40.0		959	1527	2686	8194
42.0		1006	1601	2817	8595
44.0		1053	1676	2948	8995
46.0		1100	1750	3079	9396
48.0		1147	1825	3210	9796
50.0		1204	1915	3370	10283

Set pressure in psig	GW	1/2 & 3/4	1/2 & 3/4	1	1-1/4, 1-1/2 & 2
	d_0(inch)	0.276	0.413	0.591	0.906
	A_0(in^2)	0.060	0.134	0.274	0.644
	Medium	**Air in SCFM**			
30		-	-	-	360
40		-	-	-	443
50		60	106	193	526
60		70	122	223	609
70		79	139	254	692
80		89	156	284	775
90		98	172	315	858
100		107	189	345	941
110		117	206	376	1025
120		126	223	406	1108
130		136	239	437	1191
140		145	256	467	1274
150		155	273	498	1357
175		179	314	574	1564
200		202	356	650	1772
225		226	398	726	1980
250		250	439	802	2187
275		273	481	878	2395
300		297	523	954	2602
325		321	565	1031	2810
350		345	606	1107	3018
375		368	648	1183	3225
400		392	690	1259	3433
425		416	731	1335	3641
450		439	773	1411	3848
475		463	815	1488	4056
500		487	857	1564	4263
525		510	898	1640	4471
550		534	940	1716	4679
575		558	982	1792	4886
600		582	1024	1868	5094
625		605	1065	1944	5302
650		629	1107	2021	5509
675		653	1149	2097	5717
700		676	1190	2173	5924
725		700	1232	2249	6132

Safety Valves
Type 06413

Cryogenic Safety Valves, angle type, stainless steel, PN50, type tested TÜV-SV.780. S/G

Full lift safety valve, orifice d_0=23mm standard safety valve,
with carbon filled PTFE valve seal, orifice d_0=23mm with PCTFE seal, closed bonnet, with lifting device
"cleaned and degreased for oxygen service"

Part No. 06413.X.0000
Inlet: male thread type G (BSPP) acc. to ISO 228/1, Outlet: female thread type G (BSPP) acc. to ISO 228/1

Part No. 06413.X.2000
Inlet: male thread type R (BSPT) acc. to ISO 7/1, Outlet: female thread type G (BSPP) acc. to ISO 228/1

Part No. 06413.X.5000
Inlet: male thread NPT acc. to ANSI B 1.20.1, Outlet: female thread type G (BSPP) acc. to ISO 228/1

Part No. 06413.X.6000
Inlet: male thread NPT acc. to ANSI B 1.20.1, Outlet: female thread NPT acc. to ANSI B 1.20.1

Applications:
Provided as safety device for protection against excessive pressure in stationary and moveable gas cylinders and pressure vessels. Approved for air gases, vapours and cryogenic liquefied gases incl. LNG.
Working temperature: -196°C / -321°F (77K) up to +185°C / +365°F (458K), suitable for horizontal installation

Materials		DIN EN	ASME/ASTM
1	Outlet body	1.4308	A 351 CF8
2	Inlet body	1.4301	A 479 Grade 304
3	Valve seal	PTFE / Carbon filled (25%) PCTFE ($d_0$23)	
4	Disc	1.4301	A 479 Grade 304
5	Guide plate	1.4301	A 479 Grade 304
5a	Guide plate from GW 1	1.4301	A 479 Grade 304
6	Stem	1.4571	A 479 Grade 316Ti
7	Spring	1.4571	A 313 Grade 316Ti
8	Bonnet	1.4308	A 351 CF8
9	Spring clamp	1.4301	A 479 Grade 304
10	Thread ring	1.4301	A 479 Grade 304
11	Lifting cap	1.4301	A 479 Grade 304
12	Lifting spring	1.4571	A 313 Grade 316Ti
13	Lifting stem	1.4301	A 479 Grade 304
14	Lever	1.4408	A 351 CF8M

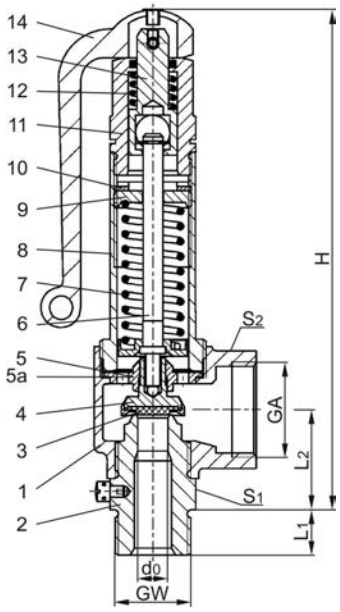

Type 06413	Technical data								
Nominal size	**GW**	**1/2**	**3/4**	**1/2**	**3/4**	**1**	**1-1/4**	**1-1/2**	**2**
Orifice	d_0	7.0	7.0	10.5	10.5	15.0	23.0	23.0	23.0
Dimension code	.X.	0704	0706	1004	1006	1510	2312	2314	2320
Set pressure range	bar	3.3-50.0	3.3-50.0	2.9-50.0	2.9-50.0	2.9-50.0	2.0-50.0	2.0-50.0	2.0-50.0
Outlet	GA	1	1	1	1	1-1/4	2	2	2
Height	H	175	175	175	175	194	270	270	268
Length	L_1	14	16	14	16	18	20	20	25
Length	L_2	36	36	36	36	42	56	56	54
Wrench size across flats	S_1	30	30	30	30	41	55	55	65
Wrench size across flats	S_2	41	41	41	41	50	70	70	70
Weight	ca. kg	1.00	1.02	0.98	1.01	1.52	3.80	3.85	4.28
Coefficient of discharge	α_w	0.82	0.82	0.58	0.58	0.5	0.62	0.62	0.62
Coefficient of discharge	rated slope	0.862	0.862	1.517	1.517	2.769	7.55	7.55	7.55

Dimensions in mm.

Safety Valves
Type 06413

Discharge capacities

Medium:
Air in m^3/h at 0°C and 1013.25 mbar
Air in SCFM at 60°F (15.6°C) and 14.7 psia (1013.25 mbar)

The capacity indicated below is for a fully opened valve.

d_0 - orifice
A_0 - flow area

Calculation of discharge capacity acc. to AD2000-Merkblatt A2 / DIN EN ISO 4126-1 resp. ASME Code Sec. VIII.

Set pressure in bar (g)	GW	1/2 & 3/4	1/2 & 3/4	1	1-1/4, 1-1/2 & 2
	d_0(mm)	7.0	10.5	15.0	23.0
	A_0(mm^2)	38.48	86.59	176.71	415.48
	Medium	**Air in m^3/h**			
2.0		-	-	-	564
2.9		-	139	244	738
3.0		-	143	251	758
3.3		96	154	270	817
4.0		112	179	314	952
5.0		135	215	379	1148
6.0		158	251	442	1342
7.0		181	287	506	1535
8.0		204	324	571	1735
9.0		227	361	634	1929
10.0		250	398	699	2128
12.0		295	470	827	2517
14.0		341	543	955	2907
16.0		387	615	1082	3297
18.0		432	688	1210	3686
20.0		482	767	1350	4115
22.0		528	841	1479	4508
24.0		574	914	1608	4902
26.0		620	987	1737	5295
28.0		666	1060	1865	5688
30.0		719	1144	2013	6139
32.0		765	1218	2143	6536
34.0		812	1292	2273	6933
36.0		858	1366	2403	7330
38.0		905	1440	2533	7727
40.0		959	1527	2686	8194
42.0		1006	1601	2817	8595
44.0		1053	1676	2948	8995
46.0		1100	1750	3079	9396
48.0		1147	1825	3210	9796
50.0		1204	1915	3370	10283

Set pressure in psig	GW	1/2 & 3/4	1/2 & 3/4	1	1-1/4, 1-1/2 & 2
	d_0(inch)	0.276	0.413	0.591	0.906
	A_0(in^2)	0.060	0.134	0.274	0.644
	Medium	**Air in SCFM**			
30		-	-	-	360
40		-	-	-	443
50		60	106	193	526
60		70	122	223	609
70		79	139	254	692
80		89	156	284	775
90		98	172	315	858
100		107	189	345	941
110		117	206	376	1025
120		126	223	406	1108
130		136	239	437	1191
140		145	256	467	1274
150		155	273	498	1357
175		179	314	574	1564
200		202	356	650	1772
225		226	398	726	1980
250		250	439	802	2187
275		273	481	878	2395
300		297	523	954	2602
325		321	565	1031	2810
350		345	606	1107	3018
375		368	648	1183	3225
400		392	690	1259	3433
425		416	731	1335	3641
450		439	773	1411	3848
475		463	815	1488	4056
500		487	857	1564	4263
525		510	898	1640	4471
550		534	940	1716	4679
575		558	982	1792	4886
600		582	1024	1868	5094
625		605	1065	1944	5302
650		629	1107	2021	5509
675		653	1149	2097	5717
700		676	1190	2173	5924
725		700	1232	2249	6132

Safety Valves
Type 06420

Cryogenic Safety Valves, angle type, bronze, PN40
d_0=7.0 & 10.5mm up to PN50
type tested TÜV-SV.1111. S/G
Standard safety valve,
with PCTFE valve seal, (except $d_0$7, which is metal to metal seated only: in this case the **Part No.** changes from **06420.X.X000** to **06420.070X.X100**), closed bonnet "cleaned and degreased for oxygen service"

Part No. 06420.X.0000
Inlet: male thread type G (BSPP) acc. to ISO 228/1, Outlet: female thread type G (BSPP) acc. to ISO 228/1
Part No. 06420.X.2000
Inlet: male thread type R (BSPT) acc. to ISO 7/1, Outlet: female thread type G (BSPP) acc. to ISO 228/1
Part No. 06420.X.5000
Inlet: male thread NPT acc. to ANSI B 1.20.1, Outlet: female thread type G (BSPP) acc. to ISO 228/1
Part No. 06420.X.6000
Inlet: male thread NPT acc. to ANSI B 1.20.1, Outlet: female thread NPT acc. to ANSI B 1.20.1

Applications:
Provided as safety device for protection against excessive pressure in stationary and moveable gas cylinders and pressure vessels. Approved for air gases, vapours and cryogenic liquefied gases incl. LNG. Working temperature: -196°C / -321°F (77K) up to +185°C / +365°F (458K), with PCTFE-seal up to +150°C / 302°F (423K), suitable for horizontal installation

Materials		DIN EN	ASME/ASTM
1	Outlet body	CC491K	SB62 UNS C83600
2	Inlet body	1.4301	SA 479 Grade 304
3	Valve seal	PCTFE 1.4571 1.4541	 A 313 Grade 316Ti ($d_0$7) A 276 Grade 321 ($d_0$10.5)
4	Disc	CC493K	B 505 UNS C93200
5	Guide plate	CC493K	B 505 UNS C93200
6	Stem	CW453K	B 103 UNS C52100
7	Spring	1.4571	A 313 Grade 316Ti
8	Bonnet	1.4301	A 276 Grade 304
9	Spring clamp	CW614N	B 455 UNS C38500
10	Thread ring	CW614N	B 455 UNS C38500
11	Cap	CW614N	B 455 UNS C38500

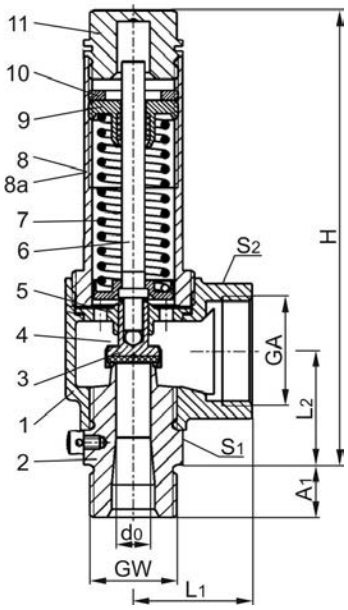

Type 06420	Technical data									
Nominal size	**GW**	**1/2**	**3/4**	**1/2**	**3/4**	**3/4**	**1**	**1**	**1-1/4**	**1-1/4**
Orifice	d_0	7.0	7.0	10.5	10.5	14.0	14.0	18.0	18.0	23.0
Dimension code	.X.	0704	0706	1004	1006	1406	1410	1810	1812	2312
Set pressure range	bar	0.4-50.0	0.4-50.0	0.4-50.0	0.4-50.0	0.4-40.0	0.4-40.0	0.4-40.0	0.4-40.0	0.4-10.0
Outlet	GA	1	1	1	1	1-1/4	1-1/4	1-1/2	1-1/2	1-1/2
Height	H	140	140	140	140	159	159	186	187	187
Length	A_1	14	16	14	16	16	18	18	20	20
Length	L_1	36	36	36	36	50	50	48	48	48
Length	L_2	36.5	36.5	36.5	34.5	44	44	50.5	51.5	52
Wrench size across flats	S_1	30	30	30	30	41	41	50	50	50
Wrench size across flats	S_2	41	41	41	41	50	50	58	58	58
Weight	ca. kg	0.78	0.80	0.76	0.79	1.25	1.31	1.87	1.99	1.90
Coeff. of disch. from 3.0 bar	α_w	0.78	0.78	0.69	0.69	0.66	0.66	0.66	0.66	0.54

Dimensions in mm.

Safety Valves
Type 06420

Discharge capacities

Medium:
Air in m^3/h at 0°C and 1013.25 mbar
Air in SCFM at 60°F (15.6°C) and 14.7 psia (1013.25 mbar)

The capacity indicated below is for a fully opened valve.

d_0 - orifice
A_0 - flow area

Calculation of discharge capacity acc. to AD2000-Merkblatt A2 / DIN EN ISO 4126-1 resp. ASME Code Sec. VIII.

Set pressure in bar (g)	GW	1/2 & 3/4	1/2 & 3/4	3/4 & 1	1 & 1-1/4	1-1/4
	d_0(mm)	7.0	10.5	14.0	18.0	23.0
	A_0(mm^2)	38.48	86.59	153.94	254.47	415.48
	Medium	**Air in m^3/h**				
0.4		24	43	77	123	157
0.5		27	49	87	141	179
1.0		41	77	131	216	287
1.5		54	101	179	291	376
2.0		66	126	219	362	473
3.0		88	176	299	495	661
4.0		111	221	375	621	829
5.0		134	266	453	748	1000
6.0		156	311	529	875	1169
7.0		179	356	606	1001	1337
8.0		202	402	684	1131	1511
9.0		225	447	761	1258	1680
10.0		248	494	839	1387	1853
12.0		293	584	993	1641	-
14.0		339	674	1147	1895	-
16.0		384	765	1300	2149	-
18.0		430	855	1454	2403	-
20.0		480	954	1623	2683	-
22.0		525	1046	1778	2939	-
24.0		571	1137	1933	3196	-
26.0		617	1228	2088	3452	-
28.0		663	1319	2244	3709	-
30.0		715	1424	2421	4003	-
32.0		762	1516	2578	4262	-
34.0		808	1608	2735	4520	-
36.0		854	1700	2891	4779	-
38.0		900	1792	3048	5038	-
40.0		955	1901	3232	5343	-
42.0		1002	1994	-	-	-
44.0		1048	2086	-	-	-
46.0		1095	2179	-	-	-
48.0		1142	2272	-	-	-
50.0		1198	2385	-	-	-

Set pressure in psig	GW	1/2 & 3/4	1/2 & 3/4	3/4 & 1	1 & 1-1/4	1-1/4
	d_0(inch)	0.276	0.413	0.551	0.709	0.906
	A_0(in^2)	0.060	0.134	0.239	0.394	0.644
	Medium	**Air in SCFM**				
15		-	-	92	-	-
28		-	-	129	-	298
29		42	-	-	-	304
35		47	90	154	-	346
40		52	100	169	280	382
50		62	118	201	333	454
60		72	137	233	385	525
70		82	156	265	438	597
80		92	174	296	490	669
90		101	193	328	543	740
100		111	212	360	595	812
120		131	249	424	700	955
145		155	296	503	831	1134
160		170	324	551	910	-
180		190	361	614	1015	-
220		229	436	741	1225	-
240		249	473	805	1330	-
250		258	492	836	1383	-
260		268	511	868	1435	-
280		288	548	932	1540	-
300		307	585	995	1645	-
325		332	632	1075	1777	-
350		357	679	1154	1908	-
375		381	725	1233	2039	-
400		406	772	1313	2170	-
425		430	819	1392	2302	-
450		455	865	1472	2433	-
475		479	912	1551	2564	-
500		504	959	1630	2695	-
525		528	1006	1710	2827	-
550		553	1052	1789	2958	-
575		577	1099	1868	3089	-
600		602	1146	-	-	-
625		626	1192	-	-	-
650		651	1239	-	-	-
675		675	1286	-	-	-
700		700	1332	-	-	-
725		724	1379	-	-	-

Safety Valves
Type 06425

Cryogenic Safety Valves, angle type, bronze, PN40
d_0=7.0 & 10.5mm up to PN50, type tested TÜV-SV.1111. S/G
Standard safety valve,
with PCTFE valve seal (except $d_0$7, which is metal to metal seated only: in this case the **Part No.** changes from **06425.X.X000** to **06425.070X.X100**), closed bonnet, with lifting device "cleaned and degreased for oxygen service"

Part No. 06425.X.0000
Inlet: male thread type G (BSPP) acc. to ISO 228/1, Outlet: female thread type G (BSPP) acc. to ISO 228/1
Part No. 06425.X.2000
Inlet: male thread type R (BSPT) acc. to 7/1, Outlet: female thread type G (BSPP) acc. to ISO 228/1
Part No. 06425.X.5000
Inlet: male thread NPT acc. to ANSI B 1.20.1, Outlet: female thread type G (BSPP) acc. to ISO 228/1
Part No. 06425.X.6000
Inlet: male thread NPT acc. to ANSI B 1.20.1, Outlet: female thread NPT acc. to ANSI B 1.20.1

Applications:
Provided as safety device for protection against excessive pressure in stationary and moveable gas cylinders and pressure vessels. Approved for air gases, vapours and cryogenic liquefied gases incl. LNG. Working temperature: -196°C / -321°F (77K) up to +185°C / +365°F (458K), with PCTFE-seal up to +150°C / 302°F (423K), suitable for horizontal installation

Materials		DIN EN	ASME/ASTM
1	Outlet body	CC491K	SB 62 UNS C83600
2	Inlet body	1.4301	SA 479 Grade 304
3	Valve seal	PCTFE 1.4571 1.4541	 A 313 Grade 316Ti ($d_0$7) A 276 Grade 321 ($d_0$10.5)
4	Disc	CC493K	B 505 UNS C93200
5	Guide plate	CC493K	B 505 UNS C93200
6	Stem	CW453K	B 103 UNS C52100
7	Spring	1.4571	A 313 Grade 316Ti
8	Bonnet	1.4301	A 276 Grade 304
9	Spring clamp	CW614N	B 455 UNS C38500
10	Thread ring	CW614N	B 455 UNS C38500
11	Lifting cap	CW614N	B 455 UNS C38500
12	Lifting spring	1.4571	A 313 Grade 316Ti
13	Lifting stem	CW614N	B 455 UNS C38500
14	Lever	1.4408	SA351 CF8M

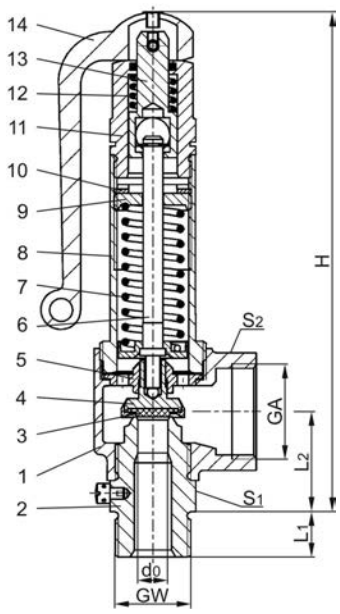

Type 06425	Technical data									
Nominal size	**GW**	**1/2**	**3/4**	**1/2**	**3/4**	**3/4**	**1**	**1**	**1-1/4**	**1-1/4**
Orifice	d_0	7.0	7.0	10.5	10.5	14.0	14.0	18.0	18.0	23.0
Dimension code	.X.	0704	0706	1004	1006	1406	1410	1810	1812	2312
Set pressure range	bar	0.4-50.0	0.4-50.0	0.4-50.0	0.4-50.0	0.4-40.0	0.4-40.0	0.4-40.0	0.4-40.0	0.4-10.0
Outlet	GA	1	1	1	1	1-1/4	1-1/4	1-1/2	1-1/2	1-1/2
Height	H	176	176	176	176	196	196	239	240	239
Length	A_1	14	16	14	16	16	18	18	20	20
Length	L_1	36	36	36	36	50	50	48	48	48
Length	L_2	36.5	36.5	36.5	34.5	44	44	50.5	51.5	52
Wrench size across flats	S_1	30	30	30	30	41	41	50	50	50
Wrench size across flats	S_2	41	41	41	41	50	50	58	58	58
Weight	ca. kg	1.00	1.02	0.98	1.01	1.50	1.56	2.51	2.63	2.52
Coeff. of disch. from 3.0 bar	α_w	0.78	0.78	0.69	0.69	0.66	0.66	0.66	0.66	0.54

Dimensions in mm.

Safety Valves
Type 06425

Discharge capacities

Medium:
Air in m^3/h at 0°C and 1013.25 mbar
Air in SCFM at 60°F (15.6°C) and 14.7 psia (1013.25 mbar)

The capacity indicated below is for a fully opened valve.

d_0 - orifice
A_0 - flow area

Calculation of discharge capacity acc. to AD2000-Merkblatt A2 / DIN EN ISO 4126-1 resp. ASME Code Sec. VIII.

Set pressure in bar (g)	GW	1/2 & 3/4	1/2 & 3/4	3/4 & 1	1 & 1-1/4	1-1/4
	d_0(mm)	7.0	10.5	14.0	18.0	23.0
	A_0(mm^2)	38.48	86.59	153.94	254.47	415.48
	Medium	**Air in m^3/h**				
0.4		24	43	77	123	157
0.5		27	49	87	141	179
1.0		41	77	131	216	287
1.5		54	101	179	291	376
2.0		66	126	219	362	473
3.0		88	176	299	495	661
4.0		111	221	375	621	829
5.0		134	266	453	748	1000
6.0		156	311	529	875	1169
7.0		179	356	606	1001	1337
8.0		202	402	684	1131	1511
9.0		225	447	761	1258	1680
10.0		248	494	839	1387	1853
12.0		293	584	993	1641	-
14.0		339	674	1147	1895	-
16.0		384	765	1300	2149	-
18.0		430	855	1454	2403	-
20.0		480	954	1623	2683	-
22.0		525	1046	1778	2939	-
24.0		571	1137	1933	3196	-
26.0		617	1228	2088	3452	-
28.0		663	1319	2244	3709	-
30.0		715	1424	2421	4003	-
32.0		762	1516	2578	4262	-
34.0		808	1608	2735	4520	-
36.0		854	1700	2891	4779	-
38.0		900	1792	3048	5038	-
40.0		955	1901	3232	5343	-
42.0		1002	1994	-	-	-
44.0		1048	2086	-	-	-
46.0		1095	2179	-	-	-
48.0		1142	2272	-	-	-
50.0		1198	2385	-	-	-

Set pressure in psig	GW	1/2 & 3/4	1/2 & 3/4	3/4 & 1	1 & 1-1/4	1-1/4
	d_0(inch)	0.276	0.413	0.551	0.709	0.906
	A_0(in^2)	0.060	0.134	0.239	0.394	0.644
	Medium	**Air in SCFM**				
15		-	-	92	-	-
28		-	-	129	-	298
29		42	-	-	-	304
35		47	90	154	-	346
40		52	100	169	280	382
50		62	118	201	333	454
60		72	137	233	385	525
70		82	156	265	438	597
80		92	174	296	490	669
90		101	193	328	543	740
100		111	212	360	595	812
120		131	249	424	700	955
145		155	296	503	831	1134
160		170	324	551	910	-
180		190	361	614	1015	-
220		229	436	741	1225	-
240		249	473	805	1330	-
250		258	492	836	1383	-
260		268	511	868	1435	-
280		288	548	932	1540	-
300		307	585	995	1645	-
325		332	632	1075	1777	-
350		357	679	1154	1908	-
375		381	725	1233	2039	-
400		406	772	1313	2170	-
425		430	819	1392	2302	-
450		455	865	1472	2433	-
475		479	912	1551	2564	-
500		504	959	1630	2695	-
525		528	1006	1710	2827	-
550		553	1052	1789	2958	-
575		577	1099	1868	3089	-
600		602	1146	-	-	-
625		626	1192	-	-	-
650		651	1239	-	-	-
675		675	1286	-	-	-
700		700	1332	-	-	-
725		724	1379	-	-	-

Safety Valves
Type 06421

Cryogenic Safety Valves, angle type, bronze, PN40
d_0=7,0 & 10,5mm up to PN50,
type tested TÜV-SV.1111. S/G

Standard safety valve,
with PCTFE valve seal (except $d_0$7, which is metal to metal seated only: in this case the **Part No.** changes from **06421.X.X000** to **06421.070X.X100**), closed bonnet
"cleaned and degreased for oxygen servive"

Part No. 06421.X.0000
Inlet: female thread type G (BSPP) acc. to ISO 228/1
Outlet: female thread type G (BSPP) acc. to ISO 228/1

Applications:
Provided as safety device for protection against excessive pressure in stationary and moveable gas cylinders and pressure vessels. Approved for air gases, vapours and cryogenic liquefied gases incl. LNG.
Working temperature: -196°C / -321°F (77K) up to +185°C / +365°F (458K), with PCTFE-seal up to +150°C / 302°F (423K), suitable for horizontal installation

Materials		DIN EN	ASME/ASTM
1	Outlet body	CC491K	SB 62 UNS C83600
2	Inlet body	1.4301	SA 479 Grade 304
3	Valve seal	PCTFE 1.4571 1.4541	 A 313 Grade 316Ti ($d_0$7) A 276 Grade 321 ($d_0$10.5)
4	Disc	CC493K	B 505 UNS C93200
5	Guide plate	CW493K	B 505 UNS C93200
6	Stem	CW453K	B 103 UNS C52100
7	Spring	1.4571	A 313 Grade 316Ti
8	Bonnet	1.4301	A 276 Grade 304
9	Spring clamp	CW614N	B 455 UNS C38500
10	Thread ring	CW614N	B 455 UNS C38500
11	Cap	CW614N	B 455 UNS C38500

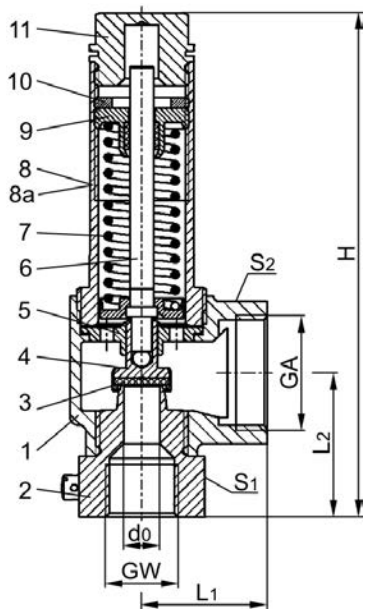

Type 06421	Technical data					
Nominal size	**GW**	**1/2**	**1/2**	**3/4**	**1**	**1-1/4**
Orifice	d_0	7.0	10.5	14.0	18.0	23.0
Dimension Code	.X.	0704	1004	1406	1810	2312
Set pressure range	bar	0.4-50.0	0.4-50.0	0.4-40.0	0.4-40.0	0.4-10.0
Outlet	GA	1	1	1-1/4	1-1/2	1-1/2
Height	H	145	145	164	195	200
Length	L_1	36	36	50	48	48
Length	L_2	41.5	41.5	49	59.5	65
Wrench size across flats	S_1	36	36	41	50	50
Wrench size across flats	S_2	41	41	50	58	58
Weight	ca. kg	0.80	0.795	1.25	1.87	1.79
Coeff. of discharge from 3.0 bar	α_w	0.78	0.69	0.66	0.66	0.54

Dimensions in mm.

Safety Valves
Type 06421

Discharge capacities

Medium:
Air in m^3/h at 0°C and 1013.25 mbar
Air in SCFM at 60°F (15.6°C) and 14.7 psia (1013.25 mbar)

The capacity indicated below is for a fully opened valve.

d_0 - orifice
A_0 - flow area

Calculation of discharge capacity acc. to AD2000-Merkblatt A2 / DIN EN ISO 4126-1 resp. ASME Code Sec. VIII.

Set pressure in bar (g)	GW	1/2	1/2	3/4	1	1-1/4
	d_0(mm)	7.0	10.5	14.0	18.0	23.0
	A_0(mm^2)	38.48	86.59	153.94	254.47	415.48
	Medium	**Air in m^3/h**				
0.4		24	43	77	123	157
0.5		27	49	87	141	179
1.0		41	77	131	216	287
1.5		54	101	179	291	376
2.0		66	126	219	362	473
3.0		88	176	299	495	661
4.0		111	221	375	621	829
5.0		134	266	453	748	1000
6.0		156	311	529	875	1169
7.0		179	356	606	1001	1337
8.0		202	402	684	1131	1511
9.0		225	447	761	1258	1680
10.0		248	494	839	1387	1853
12.0		293	584	993	1641	-
14.0		339	674	1147	1895	-
16.0		384	765	1300	2149	-
18.0		430	855	1454	2403	-
20.0		480	954	1623	2683	-
22.0		525	1046	1778	2939	-
24.0		571	1137	1933	3196	-
26.0		617	1228	2088	3452	-
28.0		663	1319	2244	3709	-
30.0		715	1424	2421	4003	-
32.0		762	1516	2578	4262	-
34.0		808	1608	2735	4520	-
36.0		854	1700	2891	4779	-
38.0		900	1792	3048	5038	-
40.0		955	1901	3232	5343	-
42.0		1002	1994	-	-	-
44.0		1048	2086	-	-	-
46.0		1095	2179	-	-	-
48.0		1142	2272	-	-	-
50.0		1198	2385	-	-	-

Set pressure in psig	GW	1/2	1/2	3/4	1	1-1/4
	d_0(inch)	0.276	0.413	0.551	0.709	0.906
	A_0(in^2)	0.060	0.134	0.239	0.394	0.644
	Medium	**Air in SCFM**				
15		-	-	92	-	-
28		-	-	129	-	298
29		42	-	-	-	304
35		47	90	154	-	346
40		52	100	169	280	382
50		62	118	201	333	454
60		72	137	233	385	525
70		82	156	265	438	597
80		92	174	296	490	669
90		101	193	328	543	740
100		111	212	360	595	812
120		131	249	424	700	955
145		155	296	503	831	1134
160		170	324	551	910	-
180		190	361	614	1015	-
220		229	436	741	1225	-
240		249	473	805	1330	-
250		258	492	836	1383	-
260		268	511	868	1435	-
280		288	548	932	1540	-
300		307	585	995	1645	-
325		332	632	1075	1777	-
350		357	679	1154	1908	-
375		381	725	1233	2039	-
400		406	772	1313	2170	-
425		430	819	1392	2302	-
450		455	865	1472	2433	-
475		479	912	1551	2564	-
500		504	959	1630	2695	-
525		528	1006	1710	2827	-
550		553	1052	1789	2958	-
575		577	1099	1868	3089	-
600		602	1146	-	-	-
625		626	1192	-	-	-
650		651	1239	-	-	-
675		675	1286	-	-	-
700		700	1332	-	-	-
725		724	1379	-	-	-

Safety Valves
Type 06426

Cryogenic Safety Valves, angle type, bronze, PN40
d_0=7,0 & 10,5mm up to PN50,
type tested TÜV-SV.1111. S/G

Standard safety valve,
with PCTFE valve seal (except $d_0$7, which is metal to metal seated only: in this case the **Part No.** changes from **06426.X.X000** to **06426.070X.X100**), closed bonnet, with lifting device "cleaned and degreased for oxygen servive"

Part No. 06426.X.0000
Inlet: female thread type G (BSPP) acc. to ISO 228/1
Outlet: female thread type G (BSPP) acc. to ISO 228/1

Applications:
Provided as safety device for protection against excessive pressure in stationary and moveable gas cylinders and pressure vessels. Approved for air gases, vapours and cryogenic liquefied gases incl. LNG.
Working temperature: -196°C / -321°F (77K) up to +185°C / +365°F (458K), with PCTFE-seal up to +150°C / 302°F (423K), suitable for horizontal installation

Materials		DIN EN	ASME/ASTM
1	Outlet body	CC491K	SB 62 UNS C83600
2	Inlet body	1.4301	SA 479 Grade 304
3	Valve seal	PCTFE 1.4571 1.4541	 A 313 Grade 316Ti ($d_0$7) A 276 Grade 321 ($d_0$10.5)
4	Disc	CC493K	B 505 UNS C93200
5	Guide plate	CC493K	B 505 UNS C93200
6	Stem	CW453K	B 103 UNS C52100
7	Spring	1.4571	A 313 Grade 316Ti
8	Bonnet	1.4301	A 276 Grade 304
9	Spring clamp	CW614N	B 455 UNS C38500
10	Thread ring	CW614N	B 455 UNS C38500
11	Lifting cap	CW614N	B 455 UNS C38500
12	Lifting spring	1.4571	A 313 Grade 316Ti
13	Lifting stem	CW614N	B 455 UNS C38500
14	Lever	1.4408	SA351 CF8M

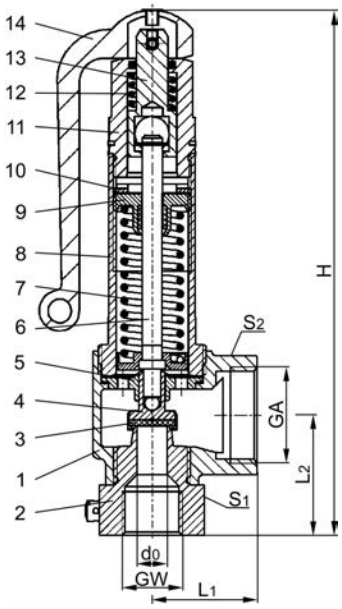

Type 06426	Technical Data					
Nominal size	**GW**	**1/2**	**1/2**	**3/4**	**1**	**1-1/4**
Orifice	d_0	7.0	10.5	14.0	18.0	23.0
Dimension code	.X.	0704	1004	1406	1810	2312
Set pressure range	bar	0.4-50.0	0.4-50.0	0.4-40.0	0.4-40.0	0.4-10.0
Outlet	GA	1	1	1-1/4	1-1/2	1-1/2
Height	H	181	181	201	247	252
Length	L_1	36	36	50	48	48
Length	L_2	41.5	41.5	49	59.5	65
Wrench size across flats	S_1	36	36	41	50	50
Wrench size across flats	S_2	41	41	50	58	58
Weight	ca. kg	1.02	1.01	1.50	2.45	2.40
Coeff. of discharge from 3.0 bar	α_w	0.78	0.69	0.66	0.66	0.54

Dimensions in mm.

Safety Valves
Type 06426

Discharge capacities

Medium:
Air in m^3/h at 0°C and 1013.25 mbar
Air in SCFM at 60°F (15.6°C) and 14.7 psia (1013.25 mbar)

The capacity indicated below is for a fully opened valve.

d_0 - orifice
A_0 - flow area

Calculation of discharge capacity acc. to AD2000-Merkblatt A2 / DIN EN ISO 4126-1 resp. ASME Code Sec. VIII.

Set pressure in bar (g)	GW	1/2	1/2	3/4	1	1-1/4
	d_0(mm)	7.0	10.5	14.0	18.0	23.0
	A_0(mm^2)	38.48	86.59	153.94	254.47	415.48
	Medium	**Air in m^3/h**				
0.4		24	43	77	123	157
0.5		27	49	87	141	179
1.0		41	77	131	216	287
1.5		54	101	179	291	376
2.0		66	126	219	362	473
3.0		88	176	299	495	661
4.0		111	221	375	621	829
5.0		134	266	453	748	1000
6.0		156	311	529	875	1169
7.0		179	356	606	1001	1337
8.0		202	402	684	1131	1511
9.0		225	447	761	1258	1680
10.0		248	494	839	1387	1853
12.0		293	584	993	1641	-
14.0		339	674	1147	1895	-
16.0		384	765	1300	2149	-
18.0		430	855	1454	2403	-
20.0		480	954	1623	2683	-
22.0		525	1046	1778	2939	-
24.0		571	1137	1933	3196	-
26.0		617	1228	2088	3452	-
28.0		663	1319	2244	3709	-
30.0		715	1424	2421	4003	-
32.0		762	1516	2578	4262	-
34.0		808	1608	2735	4520	-
36.0		854	1700	2891	4779	-
38.0		900	1792	3048	5038	-
40.0		955	1901	3232	5343	-
42.0		1002	1994	-	-	-
44.0		1048	2086	-	-	-
46.0		1095	2179	-	-	-
48.0		1142	2272	-	-	-
50.0		1198	2385	-	-	-

Set pressure in psig	GW	1/2	1/2	3/4	1	1-1/4
	d_0(inch)	0.276	0.413	0.551	0.709	0.906
	A_0(in^2)	0.060	0.134	0.239	0.394	0.644
	Medium	**Air in SCFM**				
15		-	-	92	-	-
28		-	-	129	-	298
29		42	-	-	-	304
35		47	90	154	-	346
40		52	100	169	280	382
50		62	118	201	333	454
60		72	137	233	385	525
70		82	156	265	438	597
80		92	174	296	490	669
90		101	193	328	543	740
100		111	212	360	595	812
120		131	249	424	700	955
145		155	296	503	831	1134
160		170	324	551	910	-
180		190	361	614	1015	-
220		229	436	741	1225	-
240		249	473	805	1330	-
250		258	492	836	1383	-
260		268	511	868	1435	-
280		288	548	932	1540	-
300		307	585	995	1645	-
325		332	632	1075	1777	-
350		357	679	1154	1908	-
375		381	725	1233	2039	-
400		406	772	1313	2170	-
425		430	819	1392	2302	-
450		455	865	1472	2433	-
475		479	912	1551	2564	-
500		504	959	1630	2695	-
525		528	1006	1710	2827	-
550		553	1052	1789	2958	-
575		577	1099	1868	3089	-
600		602	1146	-	-	-
625		626	1192	-	-	-
650		651	1239	-	-	-
675		675	1286	-	-	-
700		700	1332	-	-	-
725		724	1379	-	-	-

Safety Valves
Type 06440

Cryogenic Safety Valves, angle type, stainless steel, PN40
d_0=7.0 & 10.5mm up to PN50
type tested TÜV-SV.1111. S/G
Standard safety valve,
with PCTFE valve seal, (except $d_0$7, which is metal to metal seated only: in this case the **Part No.** changes from **06440.X.X000** to **06440.070X.X100**), closed bonnet "cleaned and degreased for oxygen service"

Part No. 06440.X.0000
Inlet: male thread type G (BSPP) acc. to ISO 228/1, Outlet: female thread type G (BSPP) acc. to ISO 228/1
Part No. 06440.X.2000
Inlet: male thread type R (BSPT) acc. to ISO 7/1, Outlet: female thread type G (BSPP) acc. to ISO 228/1
Part No. 06440.X.5000
Inlet: male thread NPT acc. to ANSI B 1.20.1, Outlet: female thread type G (BSPP) acc. to ISO 228/1
Part No. 06440.X.6000
Inlet: male thread NPT acc. to ANSI B 1.20.1, Outlet: female thread NPT acc. to ANSI B 1.20.1

Applications:
Provided as safety device for protection against excessive pressure in stationary and moveable gas cylinders and pressure vessels. Approved for air gases, vapours and cryogenic liquefied gases incl. LNG.
Working temperature: -196°C / -321°F (77K) up to +185°C / +365°F (458K), with PCTFE-seal up to +150°C / 302°F (423K), suitable for horizontal installation

Materials		DIN EN	ASME/ASTM
1	Outlet body	1.4308	SA351 CF8
2	Inlet body	1.4301	SA479 Grade 304
3	Valve seal	PCTFE 1.4571 1.4541	 A 313 Grade 316Ti ($d_0$7) A 276 Grade 321 ($d_0$10.5)
4	Disc	1.4541	A276 Grade 321
5	Guide plate	1.4301	SA479 Grade 304
6	Stem	1.4301	SA479 Grade 304
7	Spring	1.4571	A 313 Grade 316Ti
8	Bonnet	1.4301	A 276 Grade 304
9	Spring clamp	1.4301	SA479 Grade 304
10	Thread ring	1.4301	SA479 Grade 304
11	Cap	1.4301	SA479 Grade 304

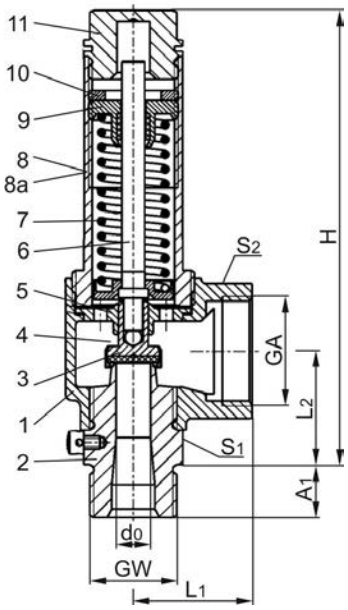

Type 06440	Technical data									
Nominal size	**GW**	**1/2**	**3/4**	**1/2**	**3/4**	**3/4**	**1**	**1**	**1-1/4**	**1-1/4**
Orifice	d_0	7.0	7.0	10.5	10.5	14.0	14.0	18.0	18.0	23.0
Dimension code	.X.	0704	0706	1004	1006	1406	1410	1810	1812	2312
Set pressure range	bar	0.4-50.0	0.4-50.0	0.4-50.0	0.4-50.0	0.4-40.0	0.4-40.0	0.4-40.0	0.4-40.0	0.4-10.0
Outlet	GA	1	1	1	1	1-1/4	1-1/4	1-1/2	1-1/2	1-1/2
Height	H	140	140	140	140	159	159	186	187	187
Length	A_1	14	16	14	16	16	18	18	20	20
Length	L_1	36	36	36	36	50	50	48	48	48
Length	L_2	36.5	36.5	36.5	34.5	44	44	50.5	51.5	52
Wrench size across flats	S_1	30	30	30	30	41	41	50	50	50
Wrench size across flats	S_2	41	41	41	41	50	50	58	58	58
Weight	ca. kg	0.78	0.80	0.76	0.79	1.25	1.31	1.87	1.99	1.90
Coeff. of disch. from 3.0 bar	α_w	0.78	0.78	0.69	0.69	0.66	0.66	0.66	0.66	0.54

Dimensions in mm.

Safety Valves
Type 06440

Discharge capacities

Medium:
Air in m^3/h at 0°C and 1013.25 mbar
Air in SCFM at 60°F (15.6°C) and 14.7 psia (1013.25 mbar)

The capacity indicated below is for a fully opened valve.

d_0 - orifice
A_0 - flow area

Calculation of discharge capacity acc. to AD2000-Merkblatt A2 / DIN EN ISO 4126-1 resp. ASME Code Sec. VIII.

Set pressure in bar (g)	GW	1/2 & 3/4	1/2 & 3/4	3/4 & 1	1 & 1-1/4	1-1/4
	d_0(mm)	7.0	10.5	14.0	18.0	23.0
	A_0(mm^2)	38.48	86.59	153.94	254.47	415.48
	Medium	**Air in m^3/h**				
0.4		24	43	77	123	157
0.5		27	49	87	141	179
1.0		41	77	131	216	287
1.5		54	101	179	291	376
2.0		66	126	219	362	473
3.0		88	176	299	495	661
4.0		111	221	375	621	829
5.0		134	266	453	748	1000
6.0		156	311	529	875	1169
7.0		179	356	606	1001	1337
8.0		202	402	684	1131	1511
9.0		225	447	761	1258	1680
10.0		248	494	839	1387	1853
12.0		293	584	993	1641	-
14.0		339	674	1147	1895	-
16.0		384	765	1300	2149	-
18.0		430	855	1454	2403	-
20.0		480	954	1623	2683	-
22.0		525	1046	1778	2939	-
24.0		571	1137	1933	3196	-
26.0		617	1228	2088	3452	-
28.0		663	1319	2244	3709	-
30.0		715	1424	2421	4003	-
32.0		762	1516	2578	4262	-
34.0		808	1608	2735	4520	-
36.0		854	1700	2891	4779	-
38.0		900	1792	3048	5038	-
40.0		955	1901	3232	5343	-
42.0		1002	1994	-	-	-
44.0		1048	2086	-	-	-
46.0		1095	2179	-	-	-
48.0		1142	2272	-	-	-
50.0		1198	2385	-	-	-

Set pressure in psig	GW	1/2 & 3/4	1/2 & 3/4	3/4 & 1	1 & 1-1/4	1-1/4
	d_0(inch)	0.276	0.413	0.551	0.709	0.906
	A_0(in^2)	0.060	0.134	0.239	0.394	0.644
	Medium	**Air in SCFM**				
15		-	-	92	-	-
28		-	-	129	-	298
29		42	-	-	-	304
35		47	90	154	-	346
40		52	100	169	280	382
50		62	118	201	333	454
60		72	137	233	385	525
70		82	156	265	438	597
80		92	174	296	490	669
90		101	193	328	543	740
100		111	212	360	595	812
120		131	249	424	700	955
145		155	296	503	831	1134
160		170	324	551	910	-
180		190	361	614	1015	-
220		229	436	741	1225	-
240		249	473	805	1330	-
250		258	492	836	1383	-
260		268	511	868	1435	-
280		288	548	932	1540	-
300		307	585	995	1645	-
325		332	632	1075	1777	-
350		357	679	1154	1908	-
375		381	725	1233	2039	-
400		406	772	1313	2170	-
425		430	819	1392	2302	-
450		455	865	1472	2433	-
475		479	912	1551	2564	-
500		504	959	1630	2695	-
525		528	1006	1710	2827	-
550		553	1052	1789	2958	-
575		577	1099	1868	3089	-
600		602	1146	-	-	-
625		626	1192	-	-	-
650		651	1239	-	-	-
675		675	1286	-	-	-
700		700	1332	-	-	-
725		724	1379	-	-	-

Safety Valves
Type 06445

Cryogenic Safety Valves, angle type, stainless steel, PN40
d_0=7.0 & 10.5mm up to PN50, type tested TÜV-SV.1111. S/G
Standard safety valve,
with PCTFE valve seal (except $d_0$7, which is metal to metal seated only: in this case the **Part No.** changes from **06445.X.X000** to **06445.070X.X100**), closed bonnet, with lifting device "cleaned and degreased for oxygen service"

Part No. 06445.X.0000
Inlet: male thread type G (BSPP) acc. to ISO 228/1, Outlet: female thread type G (BSPP) acc. to ISO 228/1
Part No. 06445.X.2000
Inlet: male thread type R (BSPT) acc. to 7/1, Outlet: female thread type G (BSPP) acc. to ISO 228/1
Part No. 06445.X.5000
Inlet: male thread NPT acc. to ANSI B 1.20.1, Outlet: female thread type G (BSPP) acc. to ISO 228/1
Part No. 06445.X.6000
Inlet: male thread NPT acc. to ANSI B 1.20.1, Outlet: female thread NPT acc. to ANSI B 1.20.1

Applications:
Provided as safety device for protection against excessive pressure in stationary and moveable gas cylinders and pressure vessels. Approved for air gases, vapours and cryogenic liquefied gases incl. LNG. Working temperature: -196°C / -321°F (77K) up to +185°C / +365°F (458K), with PCTFE-seal up to +150°C / 302°F (423K), suitable for horizontal installation

Materials		DIN EN	ASME/ASTM
1	Outlet body	1.4308	SA351 CF8
2	Inlet body	1.4301	A 479 Grade 304
3	Valve seal	PCTFE 1.4571 1.4541	 A 313 Grade 316Ti ($d_0$7) A 276 Grade 321 ($d_0$10.5)
4	Disc	1.4541	A 276 Grade 321
5	Guide plate	1.4301	A 479 Grade 304
6	Stem	1.4301	A 479 Grade 304
7	Spring	1.4571	A 313 Grade 316Ti
8	Bonnet	1.4301	A 276 Grade 304
9	Spring clamp	1.4301	A 479 Grade 304
10	Thread ring	1.4301	A 479 Grade 304
11	Lifting cap	1.4301	A 479 Grade 304
12	Lifting spring	1.4571	A 313 Grade 316Ti
13	Lifting stem	1.4301	A 479 Grade 304
14	Lever	1.4408	SA351 CF8M

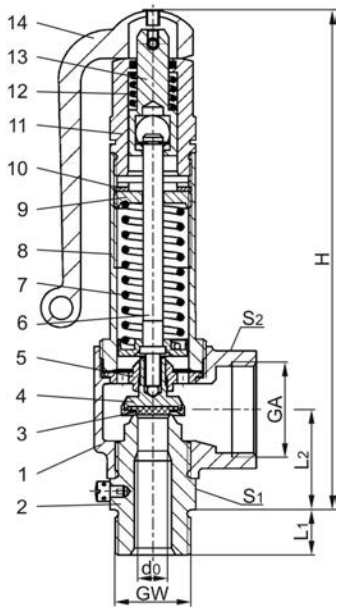

Type 06425	Technical data									
Nominal size	**GW**	**1/2**	**3/4**	**1/2**	**3/4**	**3/4**	**1**	**1**	**1-1/4**	**1-1/4**
Orifice	d_0	7.0	7.0	10.5	10.5	14.0	14.0	18.0	18.0	23.0
Dimension code	.X.	0704	0706	1004	1006	1406	1410	1810	1812	2312
Set pressure range	bar	0.4-50.0	0.4-50.0	0.4-50.0	0.4-50.0	0.4-40.0	0.4-40.0	0.4-40.0	0.4-40.0	0.4-10.0
Outlet	GA	1	1	1	1	1-1/4	1-1/4	1-1/2	1-1/2	1-1/2
Height	H	176	176	176	176	196	196	239	240	239
Length	A_1	14	16	14	16	16	18	18	20	20
Length	L_1	36	36	36	36	50	50	48	48	48
Length	L_2	36.5	36.5	36.5	34.5	44	44	50.5	51.5	52
Wrench size across flats	S_1	30	30	30	30	41	41	50	50	50
Wrench size across flats	S_2	41	41	41	41	50	50	58	58	58
Weight	ca. kg	1.00	1.02	0.98	1.01	1.50	1.56	2.51	2.63	2.52
Coeff. of disch. from 3.0 bar	α_w	0.78	0.78	0.69	0.69	0.66	0.66	0.66	0.66	0.54

Dimensions in mm.

Safety Valves
Type 06445

Discharge capacities

Medium:
Air in m^3/h at 0°C and 1013.25 mbar
Air in SCFM at 60°F (15.6°C) and 14.7 psia (1013.25 mbar)

The capacity indicated below is for a fully opened valve.

d_0 - orifice
A_0 - flow area

Calculation of discharge capacity acc. to AD2000-Merkblatt A2 / DIN EN ISO 4126-1 resp. ASME Code Sec. VIII.

Set pressure in bar (g)	GW	1/2 & 3/4	1/2 & 3/4	3/4 & 1	1 & 1-1/4	1-1/4
	d_0(mm)	7.0	10.5	14.0	18.0	23.0
	A_0(mm^2)	38.48	86.59	153.94	254.47	415.48
	Medium	**Air in m^3/h**				
0.4		24	43	77	123	157
0.5		27	49	87	141	179
1.0		41	77	131	216	287
1.5		54	101	179	291	376
2.0		66	126	219	362	473
3.0		88	176	299	495	661
4.0		111	221	375	621	829
5.0		134	266	453	748	1000
6.0		156	311	529	875	1169
7.0		179	356	606	1001	1337
8.0		202	402	684	1131	1511
9.0		225	447	761	1258	1680
10.0		248	494	839	1387	1853
12.0		293	584	993	1641	-
14.0		339	674	1147	1895	-
16.0		384	765	1300	2149	-
18.0		430	855	1454	2403	-
20.0		480	954	1623	2683	-
22.0		525	1046	1778	2939	-
24.0		571	1137	1933	3196	-
26.0		617	1228	2088	3452	-
28.0		663	1319	2244	3709	-
30.0		715	1424	2421	4003	-
32.0		762	1516	2578	4262	-
34.0		808	1608	2735	4520	-
36.0		854	1700	2891	4779	-
38.0		900	1792	3048	5038	-
40.0		955	1901	3232	5343	-
42.0		1002	1994	-	-	-
44.0		1048	2086	-	-	-
46.0		1095	2179	-	-	-
48.0		1142	2272	-	-	-
50.0		1198	2385	-	-	-

Set pressure in psig	GW	1/2 & 3/4	1/2 & 3/4	3/4 & 1	1 & 1-1/4	1-1/4
	d_0(inch)	0.276	0.413	0.551	0.709	0.906
	A_0(in^2)	0.060	0.134	0.239	0.394	0.644
	Medium	**Air in SCFM**				
15		-	-	92	-	-
28		-	-	129	-	298
29		42	-	-	-	304
35		47	90	154	-	346
40		52	100	169	280	382
50		62	118	201	333	454
60		72	137	233	385	525
70		82	156	265	438	597
80		92	174	296	490	669
90		101	193	328	543	740
100		111	212	360	595	812
120		131	249	424	700	955
145		155	296	503	831	1134
160		170	324	551	910	-
180		190	361	614	1015	-
220		229	436	741	1225	-
240		249	473	805	1330	-
250		258	492	836	1383	-
260		268	511	868	1435	-
280		288	548	932	1540	-
300		307	585	995	1645	-
325		332	632	1075	1777	-
350		357	679	1154	1908	-
375		381	725	1233	2039	-
400		406	772	1313	2170	-
425		430	819	1392	2302	-
450		455	865	1472	2433	-
475		479	912	1551	2564	-
500		504	959	1630	2695	-
525		528	1006	1710	2827	-
550		553	1052	1789	2958	-
575		577	1099	1868	3089	-
600		602	1146	-	-	-
625		626	1192	-	-	-
650		651	1239	-	-	-
675		675	1286	-	-	-
700		700	1332	-	-	-
725		724	1379	-	-	-

Safety Valves
Type 06441

Cryogenic Safety Valves, angle type, stainless steel, PN40
d_0=7,0 & 10,5mm up to PN50,
type tested TÜV-SV.1111. S/G

Standard safety valve,
with PCTFE valve seal (except $d_0$7, which is metal to metal seated only: in this case the **Part No.** changes from **06441.X.X000** to **06441.070X.X100**), closed bonnet
"cleaned and degreased for oxygen servive"

Part No. 06441.X.0000
Inlet: female thread type G (BSPP) acc. to ISO 228/1
Outlet: female thread type G (BSPP) acc. to ISO 228/1

Applications:
Provided as safety device for protection against excessive pressure in stationary and moveable gas cylinders and pressure vessels. Approved for air gases, vapours and cryogenic liquefied gases incl. LNG.
Working temperature: -196°C / -321°F (77K) up to +185°C / +365°F (458K), with PCTFE-seal up to +150°C / 302°F (423K), suitable for horizontal installation

Materials		DIN EN	ASME/ASTM
1	Outlet body	1.4308	SA351 CF8
2	Inlet body	1.4301	A 479 Grade 304
3	Valve seal	PCTFE 1.4571 1.4541	 A 313 Grade 316Ti ($d_0$7) A 276 Grade 321 ($d_0$10.5)
4	Disc	1.4541	A 276 Grade 321
5	Guide plate	1.4301	A 479 Grade 304
6	Stem	1.4301	A 479 Grade 304
7	Spring	1.4571	A 313 Grade 316Ti
8	Bonnet	1.4301	A 276 Grade 304
9	Spring clamp	1.4301	A 479 Grade 304
10	Thread ring	1.4301	A 479 Grade 304
11	Cap	1.4301	A 479 Grade 304

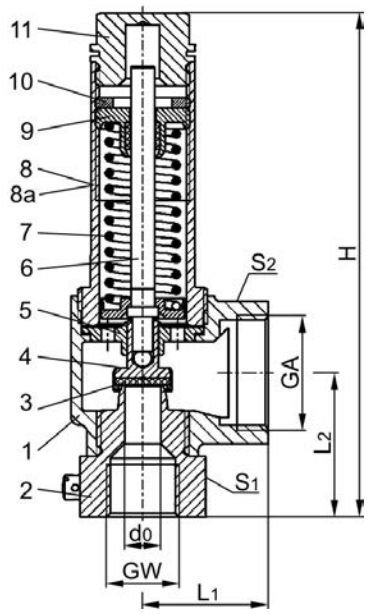

Type 06441	Technical data					
Nominal size	**GW**	**1/2**	**1/2**	**3/4**	**1**	**1-1/4**
Orifice	d_0	7.0	10.5	14.0	18.0	23.0
Dimension Code	.X.	0704	1004	1406	1810	2312
Set pressure range	bar	0.4-50.0	0.4-50.0	0.4-40.0	0.4-40.0	0.4-10.0
Outlet	GA	1	1	1-1/4	1-1/2	1-1/2
Height	H	145	145	164	195	200
Length	L_1	36	36	50	48	48
Length	L_2	41.5	41.5	49	59.5	65
Wrench size across flats	S_1	36	36	41	50	50
Wrench size across flats	S_2	41	41	50	58	58
Weight	ca. kg	0.80	0.795	1.25	1.87	1.79
Coeff. of discharge from 3.0 bar	α_w	0.78	0.69	0.66	0.66	0.54

Dimensions in mm.

Safety Valves
Type 06441

Discharge capacities

Medium:
Air in m^3/h at 0°C and 1013.25 mbar
Air in SCFM at 60°F (15.6°C) and 14.7 psia (1013.25 mbar)

The capacity indicated below is for a fully opened valve.

d_0 - orifice
A_0 - flow area

Calculation of discharge capacity acc. to AD2000-Merkblatt A2 / DIN EN ISO 4126-1 resp. ASME Code Sec. VIII.

Set pressure in bar (g)	GW	1/2	1/2	3/4	1	1-1/4
	d_0(mm)	7.0	10.5	14.0	18.0	23.0
	A_0(mm^2)	38.48	86.59	153.94	254.47	415.48
	Medium	**Air in m^3/h**				
0.4		24	43	77	123	157
0.5		27	49	87	141	179
1.0		41	77	131	216	287
1.5		54	101	179	291	376
2.0		66	126	219	362	473
3.0		88	176	299	495	661
4.0		111	221	375	621	829
5.0		134	266	453	748	1000
6.0		156	311	529	875	1169
7.0		179	356	606	1001	1337
8.0		202	402	684	1131	1511
9.0		225	447	761	1258	1680
10.0		248	494	839	1387	1853
12.0		293	584	993	1641	-
14.0		339	674	1147	1895	-
16.0		384	765	1300	2149	-
18.0		430	855	1454	2403	-
20.0		480	954	1623	2683	-
22.0		525	1046	1778	2939	-
24.0		571	1137	1933	3196	-
26.0		617	1228	2088	3452	-
28.0		663	1319	2244	3709	-
30.0		715	1424	2421	4003	-
32.0		762	1516	2578	4262	-
34.0		808	1608	2735	4520	-
36.0		854	1700	2891	4779	-
38.0		900	1792	3048	5038	-
40.0		955	1901	3232	5343	-
42.0		1002	1994	-	-	-
44.0		1048	2086	-	-	-
46.0		1095	2179	-	-	-
48.0		1142	2272	-	-	-
50.0		1198	2385	-	-	-

Set pressure in psig	GW	1/2	1/2	3/4	1	1-1/4
	d_0(inch)	0.276	0.413	0.551	0.709	0.906
	A_0(in^2)	0.060	0.134	0.239	0.394	0.644
	Medium	**Air in SCFM**				
15		-	-	92	-	-
28		-	-	129	-	298
29		42	-	-	-	304
35		47	90	154	-	346
40		52	100	169	280	382
50		62	118	201	333	454
60		72	137	233	385	525
70		82	156	265	438	597
80		92	174	296	490	669
90		101	193	328	543	740
100		111	212	360	595	812
120		131	249	424	700	955
145		155	296	503	831	1134
160		170	324	551	910	-
180		190	361	614	1015	-
220		229	436	741	1225	-
240		249	473	805	1330	-
250		258	492	836	1383	-
260		268	511	868	1435	-
280		288	548	932	1540	-
300		307	585	995	1645	-
325		332	632	1075	1777	-
350		357	679	1154	1908	-
375		381	725	1233	2039	-
400		406	772	1313	2170	-
425		430	819	1392	2302	-
450		455	865	1472	2433	-
475		479	912	1551	2564	-
500		504	959	1630	2695	-
525		528	1006	1710	2827	-
550		553	1052	1789	2958	-
575		577	1099	1868	3089	-
600		602	1146	-	-	-
625		626	1192	-	-	-
650		651	1239	-	-	-
675		675	1286	-	-	-
700		700	1332	-	-	-
725		724	1379	-	-	-

Safety Valves
Type 06446

Cryogenic Safety Valves, angle type, stainless steel, PN40
d_0=7,0 & 10,5mm up to PN50,
type tested TÜV-SV.1111. S/G

Standard safety valve,
with PCTFE valve seal (except $d_0$7, which is metal to metal seated only: in this case the **Part No.** changes from **06446.X.X000** to **06446.070X.X100**), closed bonnet, with lifting device "cleaned and degreased for oxygen servive"

Part No. 06446.X.0000
Inlet: female thread type G (BSPP) acc. to ISO 228/1
Outlet: female thread type G (BSPP) acc. to ISO 228/1

Applications:
Provided as safety device for protection against excessive pressure in stationary and moveable gas cylinders and pressure vessels. Approved for air gases, vapours and cryogenic liquefied gases incl. LNG. Working temperature: -196°C / -321°F (77K) up to +185°C / +365°F (458K), with PCTFE-seal up to +150°C / 302°F (423K), suitable for horizontal installation

Materials		DIN EN	ASME/ASTM
1	Outlet body	1.4308	SA351 CF8
2	Inlet body	1.4301	A 479 Grade 304
3	Valve seal	PCTFE 1.4571 1.4541	 A 313 Grade 316Ti ($d_0$7) A 276 Grade 321 ($d_0$10.5)
4	Disc	1.4541	A 276 Grade 321
5	Guide plate	1.4301	A 479 Grade 304
6	Stem	1.4301	A 479 Grade 304
7	Spring	1.4571	A 313 Grade 316Ti
8	Bonnet	1.4301	A 276 Grade 304
9	Spring clamp	1.4301	A 479 Grade 304
10	Thread ring	1.4301	A 479 Grade 304
11	Lifting cap	1.4301	A 479 Grade 304
12	Lifting spring	1.4571	A 313 Grade 316Ti
13	Lifting stem	1.4301	A 479 Grade 304
14	Lever	1.4408	SA351 CF8M

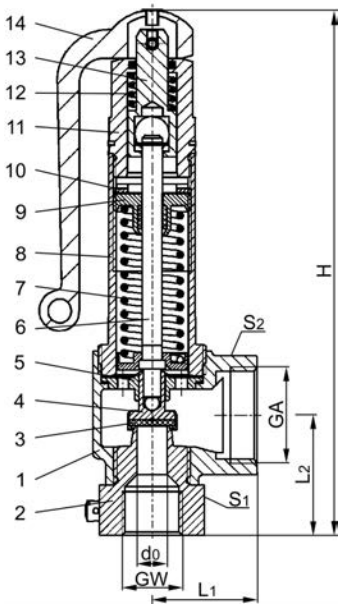

Type 06426	Technical Data					
Nominal size	**GW**	**1/2**	**1/2**	**3/4**	**1**	**1-1/4**
Orifice	d_0	7.0	10.5	14.0	18.0	23.0
Dimension code	.X.	0704	1004	1406	1810	2312
Set pressure range	bar	0.4-50.0	0.4-50.0	0.4-40.0	0.4-40.0	0.4-10.0
Outlet	GA	1	1	1-1/4	1-1/2	1-1/2
Height	H	181	181	201	247	252
Length	L_1	36	36	50	48	48
Length	L_2	41.5	41.5	49	59.5	65
Wrench size across flats	S_1	36	36	41	50	50
Wrench size across flats	S_2	41	41	50	58	58
Weight	ca. kg	1.02	1.01	1.50	2.45	2.40
Coeff. of discharge from 3.0 bar	α_w	0.78	0.69	0.66	0.66	0.54

Dimensions in mm.

Safety Valves
Type 06446

Discharge capacities

Medium:
Air in m^3/h at 0°C and 1013.25 mbar
Air in SCFM at 60°F (15.6°C) and 14.7 psia (1013.25 mbar)

The capacity indicated below is for a fully opened valve.

d_0 - orifice
A_0 - flow area

Calculation of discharge capacity acc. to AD2000-Merkblatt A2 / DIN EN ISO 4126-1 resp. ASME Code Sec. VIII.

Set pressure in bar (g)	GW	1/2	1/2	3/4	1	1-1/4
	d_0(mm)	7.0	10.5	14.0	18.0	23.0
	A_0(mm^2)	38.48	86.59	153.94	254.47	415.48
	Medium	**Air in m^3/h**				
0.4		24	43	77	123	157
0.5		27	49	87	141	179
1.0		41	77	131	216	287
1.5		54	101	179	291	376
2.0		66	126	219	362	473
3.0		88	176	299	495	661
4.0		111	221	375	621	829
5.0		134	266	453	748	1000
6.0		156	311	529	875	1169
7.0		179	356	606	1001	1337
8.0		202	402	684	1131	1511
9.0		225	447	761	1258	1680
10.0		248	494	839	1387	1853
12.0		293	584	993	1641	-
14.0		339	674	1147	1895	-
16.0		384	765	1300	2149	-
18.0		430	855	1454	2403	-
20.0		480	954	1623	2683	-
22.0		525	1046	1778	2939	-
24.0		571	1137	1933	3196	-
26.0		617	1228	2088	3452	-
28.0		663	1319	2244	3709	-
30.0		715	1424	2421	4003	-
32.0		762	1516	2578	4262	-
34.0		808	1608	2735	4520	-
36.0		854	1700	2891	4779	-
38.0		900	1792	3048	5038	-
40.0		955	1901	3232	5343	-
42.0		1002	1994	-	-	-
44.0		1048	2086	-	-	-
46.0		1095	2179	-	-	-
48.0		1142	2272	-	-	-
50.0		1198	2385	-	-	-

Set pressure in psig	GW	1/2	1/2	3/4	1	1-1/4
	d_0(inch)	0.276	0.413	0.551	0.709	0.906
	A_0(in^2)	0.060	0.134	0.239	0.394	0.644
	Medium	**Air in SCFM**				
15		-	-	92	-	-
28		-	-	129	-	298
29		42	-	-	-	304
35		47	90	154	-	346
40		52	100	169	280	382
50		62	118	201	333	454
60		72	137	233	385	525
70		82	156	265	438	597
80		92	174	296	490	669
90		101	193	328	543	740
100		111	212	360	595	812
120		131	249	424	700	955
145		155	296	503	831	1134
160		170	324	551	910	-
180		190	361	614	1015	-
220		229	436	741	1225	-
240		249	473	805	1330	-
250		258	492	836	1383	-
260		268	511	868	1435	-
280		288	548	932	1540	-
300		307	585	995	1645	-
325		332	632	1075	1777	-
350		357	679	1154	1908	-
375		381	725	1233	2039	-
400		406	772	1313	2170	-
425		430	819	1392	2302	-
450		455	865	1472	2433	-
475		479	912	1551	2564	-
500		504	959	1630	2695	-
525		528	1006	1710	2827	-
550		553	1052	1789	2958	-
575		577	1099	1868	3089	-
600		602	1146	-	-	-
625		626	1192	-	-	-
650		651	1239	-	-	-
675		675	1286	-	-	-
700		700	1332	-	-	-
725		724	1379	-	-	-

Safety Valves
Type 06801 with bellow seal

Stainless steel bellow sealed Safety Valves, angle type, PN40, type tested TÜV-SV.1105. S/G/L orifice d_0 = 12.5 mm TÜV-SV.1105. only S/G

Standard safety valve,
metal to metal seated, closed bonnet
"cleaned and degreased for oxygen service"

Part No. 06801.X.0000
Inlet: male thread type G (BSPP) acc. to ISO 228/1, Outlet: female thread type G (BSPP) acc. to ISO 228/1

Part No. 06801.X.2000
Inlet: male thread type R (BSPT) acc. to ISO 7/1, Outlet: female thread type G (BSPP) acc. to ISO 228/1

Part No. 06801.X.5000
Inlet: male thread NPT acc. to ANSI B 1.20.1, Outlet: female thread type G (BSPP) acc. to ISO 228/1

Part No. 06801.X.6000
Inlet: male thread NPT acc. to ANSI B 1.20.1, Outlet: female thread NPT acc. to ANSI B 1.20.1

Applications:
Provided as safety device for protection against excessive pressure in stationary and moveable gas cylinders and pressure vessels. Approved for non-inflammable and inflammable vapours, gases and fluids.
Working temperature: -270°C / -454°F (3K) up to +225°C / +437°F (498K)
Maximum allowed back pressure: 15% of set pressure, pressure-temperature must be observed

Materials		DIN EN	ASME/ASTM
1	Inlet body	1.4571	A 276 Grade 316Ti
2	Outlet body	1.4308	A 351 CF8
3	Disc	1.4541	A 276 Grade 321
4	Bellow	1.4571	A 276 Grade 316Ti
5	Bellow stem	1.4571	A 276 Grade 316Ti
6	Stem	CW453K	B 103 UNS C52100
7	Bonnet	1.4301	A 276 Grade 304
8	Spring	1.4571	A 276 Grade 316Ti
9	Cap	1.4301	A 276 Grade 304

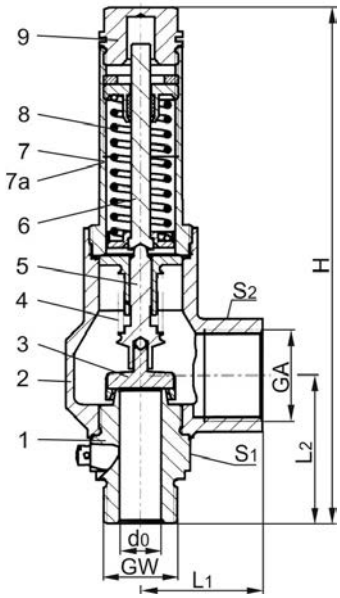

Important:
For nominal size GW 3/4, d_0 = 15.0 mm the back pressure reduces the blow off performance of the safety valve (see diagram 06801-3/4).

Type 06801	Technical data				
Nominal size	**GW**	**1/2**	**3/4**	**1**	**1**
Orifice	d_0	12.5	15	20	23
Dimension code	.X.	1204	1506	2010	2310
Set pressure range	bar	3.0-25.0	3.0-25.0	3.0-25.0	3.0-25.0
Outlet	GA	G 1	G 1	G 1-1/4	G 1-1/2
Height	H	186	190	205	255
Length	L_1	44	44	51	56
Length	L_2	52	54	63	65
Wrench size across flats	S_1	36	36	41	50
Wrench size across flats	S_2	41	41	50	55
Weight	ca. kg	1.03	1.05	1.70	2.45
Coeff. of discharge vapours, gases	α_w	0.60	0.50	0.60	0.66
Coeff. of discharge fluids	α_w	-	0.39	0.45	0.48

Dimensions in mm.

Safety Valves
Type 06801 with bellow seal

Discharge capacities
Calculation of flow rate acc. to AD2000-Merkblatt A2 / DIN EN ISO 4126-1

Medium:
Air in m^3/h at 0°C and 1013.25 mbar
Water in kg/h
Saturated steam in kg/h

The capacity indicated below is for a fully opened valve.
Maximum allowed back pressure: 15% of set pressure.
For nominal size GW 3/4 the back pressure reduces the blow off performance of the safety valve (see diagram 06801-3/4).

d_0 - orifice
A_0 - flow area

Set pressure in bar (g)	GW	1/2	3/4	1	1	1/2	3/4	1	1	3/4	1	1
	d_0(mm)	12.5	15.0	20.0	23.0	12.5	15.0	20.0	23.0	15.0	20.0	23.0
	A_0(mm^2)	122.7	176.7	314.2	415.5	122.7	176.7	314.2	415.5	176.7	314.2	415.5
	Medium	**Air**				**Saturated steam**				**Water**		
3.0		217	260	555	807	169	203	433	630	6374	13075	18445
4.0		272	327	697	1013	211	254	541	787	7360	15098	21299
5.0		328	394	840	1222	253	304	648	943	8229	16880	23813
6.0		383	460	982	1428	295	354	754	1097	9015	18492	26085
7.0		439	527	1124	1635	336	403	860	1251	9737	19973	28175
8.0		496	595	1269	1847	377	452	965	1404	10409	21352	30121
9.0		551	662	1412	2054	418	502	1070	1557	11041	22647	31948
10.0		608	730	1557	2265	459	551	1174	1709	11638	23872	33676
12.0		720	864	1842	2680	540	648	1383	2011	12749	26151	36890
14.0		831	997	2127	3095	621	745	1590	2313	13770	28246	39846
16.0		942	1131	2412	3509	702	842	1797	2615	14721	30197	42597
18.0		1054	1265	2698	3924	783	940	2005	2916	15614	32028	45181
20.0		1176	1412	3011	4381	864	1037	2212	3218	16458	33761	47625
22.0		1289	1546	3299	4799	945	1134	2420	3520	17262	35409	49950
25.0		1457	1749	3731	5427	1067	1281	2732	3975	18401	37746	53247

Diagram 06801-3/4

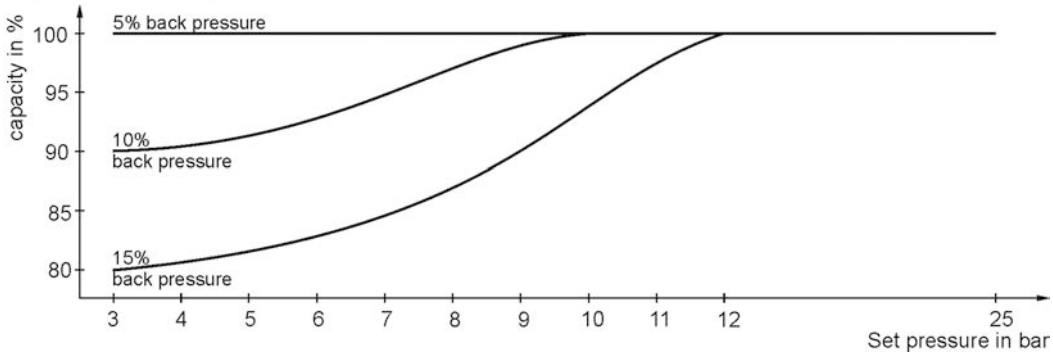

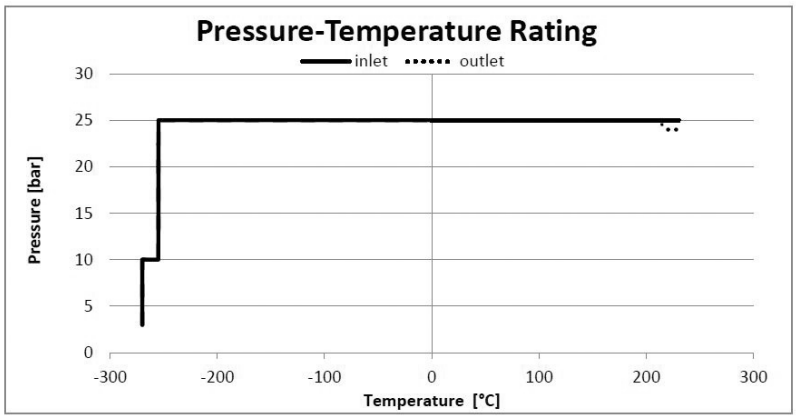

Safety Valves
Type 06806 with bellow seal

Stainless steel bellow sealed Safety Valves, angle type, PN40, type tested TÜV-SV.1105. S/G/L orifice d_0 = 12.5 mm TÜV-SV.1105. only S/G

Standard safety valve,
metal to metal seated, closed bonnet, with lifting device
"cleaned and degreased for oxygen service"

Part No. 06806.X.0000
Inlet: male thread type G (BSPP) acc. to ISO 228/1, Outlet: female thread type G (BSPP) acc. to ISO 228/1

Part No. 06806.X.2000
Inlet: male thread type R (BSPT) acc. to ISO 7/1, Outlet: female thread type G (BSPP) acc. to ISO 228/1

Part No. 06806.X.5000
Inlet: male thread NPT acc. to ANSI B 1.20.1, Outlet: female thread type G (BSPP) acc. to ISO 228/1

Part No. 06806.X.6000
Inlet: male thread NPT acc. to ANSI B 1.20.1, Outlet: female thread NPT acc. to ANSI B 1.20.1

Applications:
Provided as safety device for protection against excessive pressure in stationary and moveable gas cylinders and pressure vessels. Approved for non-inflammable and inflammable vapours, gases and fluids.
Working temperature: -270°C / -454°F (3K) up to +225°C / +437°F (498K)
Maximum allowed back pressure: 15% of set pressure, pressure-temperature must be observed

Materials		DIN EN	ASME/ASTM
1	Inlet body	1.4571	A 276 Grade 316Ti
2	Outlet body	1.4308	A 351 CF8
3	Disc	1.4541	A 276 Grade 321
4	Bellow	1.4571	A 276 Grade 316Ti
5	Bellow stem	1.4571	A 276 Grade 316Ti
6	Stem	CW453K	B 103 UNS C52100
7	Bonnet	1.4301	A 276 Grade 304
8	Spring	1.4571	A 276 Grade 316Ti
9	Lifting cap	1.4301	A 276 Grade 304
10	Lever	1.4408	A 351 CF8M

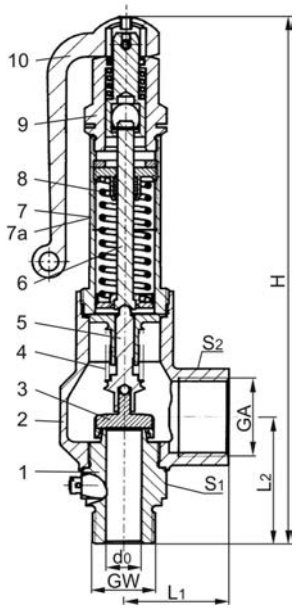

Important:
For nominal size GW 3/4, d_0 = 15.0 mm the back pressure reduces the blow off performance of the safety valve (see diagram 06806-3/4).

Type 06806	Technical data				
Nominal size	**GW**	**1/2**	**3/4**	**1**	**1**
Orifice	d_0	12.5	15	20	23
Dimension code	.X.	1204	1506	2010	2310
Set pressure range	bar	3.0-25.0	3.0-25.0	3.0-25.0	3.0-25.0
Outlet	GA	G 1	G 1	G 1-1/4	G 1-1/2
Height	H	221	225	250	305
Length	L_1	44	44	51	56
Length	L_2	52	54	63	65
Wrench size across flats	S_1	36	36	41	50
Wrench size across flats	S_2	41	41	50	55
Weight	ca. kg	1.23	1.25	1.95	3.10
Coeff. of discharge vapours, gases	α_w	0.60	0.50	0.60	0.66
Coeff. of discharge fluids	α_w	-	0.39	0.45	0.48

Dimensions in mm.

Safety Valves
Type 06806 with bellow seal

Discharge capacities
Calculation of flow rate acc. to AD2000-Merkblatt A2 / DIN EN ISO 4126-1

Medium:
Air in m^3/h at 0°C and 1013.25 mbar
Water in kg/h
Saturated steam in kg/h

The capacity indicated below is for a fully opened valve.
Maximum allowed back pressure: 15% of set pressure.
For nominal size GW 3/4 the back pressure reduces the blow off performance of the safety valve (see diagram 06806-3/4).

d_0 - orifice
A_0 - flow area

Set pressure in bar (g)	GW	1/2	3/4	1	1	1/2	3/4	1	1	3/4	1	1
	d_0(mm)	12.5	15.0	20.0	23.0	12.5	15.0	20.0	23.0	15.0	20.0	23.0
	A_0(mm^2)	122.7	176.7	314.2	415.5	122.7	176.7	314.2	415.5	176.7	314.2	415.5
	Medium	**Air**				**Saturated steam**				**Water**		
3.0		217	260	555	807	169	203	433	630	6374	13075	18445
4.0		272	327	697	1013	211	254	541	787	7360	15098	21299
5.0		328	394	840	1222	253	304	648	943	8229	16880	23813
6.0		383	460	982	1428	295	354	754	1097	9015	18492	26085
7.0		439	527	1124	1635	336	403	860	1251	9737	19973	28175
8.0		496	595	1269	1847	377	452	965	1404	10409	21352	30121
9.0		551	662	1412	2054	418	502	1070	1557	11041	22647	31948
10.0		608	730	1557	2265	459	551	1174	1709	11638	23872	33676
12.0		720	864	1842	2680	540	648	1383	2011	12749	26151	36890
14.0		831	997	2127	3095	621	745	1590	2313	13770	28246	39846
16.0		942	1131	2412	3509	702	842	1797	2615	14721	30197	42597
18.0		1054	1265	2698	3924	783	940	2005	2916	15614	32028	45181
20.0		1176	1412	3011	4381	864	1037	2212	3218	16458	33761	47625
22.0		1289	1546	3299	4799	945	1134	2420	3520	17262	35409	49950
25.0		1457	1749	3731	5427	1067	1281	2732	3975	18401	37746	53247

Diagram 06806-3/4

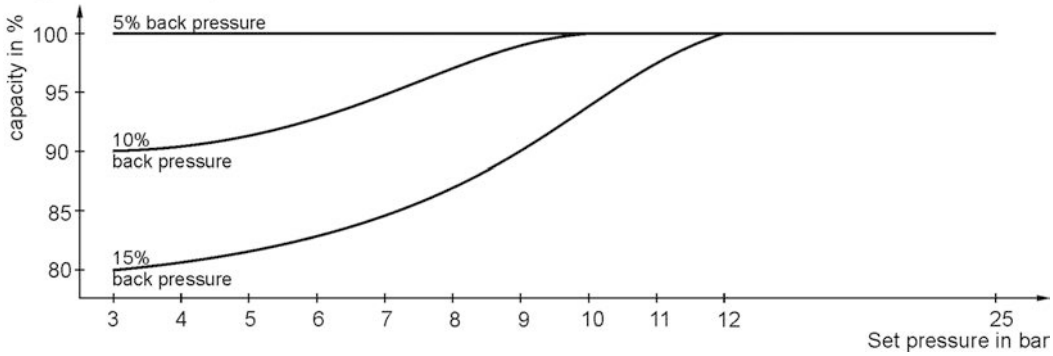

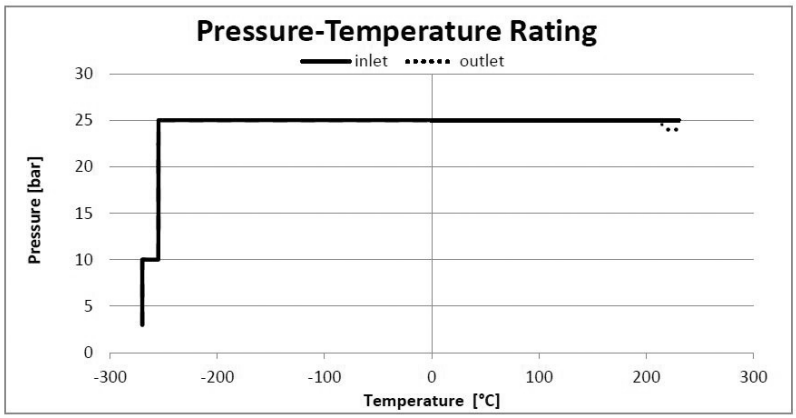

Safety Valves
Type 06800 with bellow seal

Stainless steel bellow sealed Safety Valves, angle type, PN40, type tested TÜV-SV.1105. S/G/L orifice d_0 = 12.5 mm TÜV-SV.1105. only S/G

Standard safety valve,
metal to metal seated, closed bonnet
"cleaned and degreased for oxygen service"

Part No. 06800.X.0000
Inlet: female thread type G (BSPP) acc. to ISO 228/1,
Outlet: female thread type G (BSPP) acc. to ISO 228/1
Part No. 06800.X.5000
Inlet: female NPT acc. to ANSI B 1.20.1,
Outlet: female thread type G (BSPP) acc. to ISO 228/1
Part No. 06800.X.6000
Inlet: female thread NPT acc. to ANSI B 1.20.1,
Outlet: female thread NPT acc. to ANSI B 1.20.1

Applications:
Provided as safety device for protection against excessive pressure in stationary and moveable gas cylinders and pressure vessels. Approved for non-inflammable and inflammable vapours, gases and fluids.
Working temperature: -270°C / -454°F (3K) up to +225°C / +437°F (498K)
Maximum allowed back pressure: 15% of set pressure, pressure-temperature must be observed

Materials		DIN EN	ASME/ASTM
1	Inlet body	1.4571	A 276 Grade 316Ti
2	Outlet body	1.4308	A 351 CF8
3	Disc	1.4541	A 276 Grade 321
4	Bellow	1.4571	A 276 Grade 316Ti
5	Bellow stem	1.4571	A 276 Grade 316Ti
6	Stem	CW453K	B 103 UNS C52100
7	Bonnet	1.4301	A 276 Grade 304
8	Spring	1.4571	A 276 Grade 316Ti
9	Cap	1.4301	A 276 Grade 304

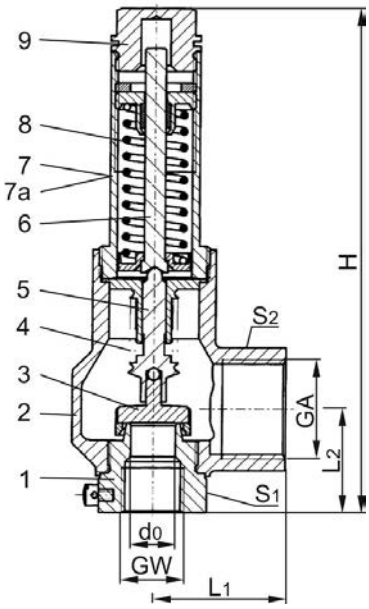

Important:
For nominal size GW 1/2, d_0 = 15.0 mm the back pressure reduces the blow off performance of the safety valve (see diagram 06800-1/2, d_0 = 15.0).

Type 06800	Technical data				
Nominal size	**GW**	**1/2**	**1/2**	**3/4**	**1**
Orifice	d_0	12.5	15	20	23
Dimension code	.X.	1204	1504	2006	2310
Set pressure range	bar	3.0-25.0	3.0-25.0	3.0-25.0	3.0-25.0
Outlet	GA	G 1	G 1	G 1-1/4	G 1-1/2
Height	H	170	170	198	245
Length	L_1	44	44	51	56
Length	L_2	35	35	48	58
Wrench size across flats	S_1	36	36	41	50
Wrench size across flats	S_2	41	41	50	55
Weight	ca. kg	1.0	0.97	1.65	2.50
Coeff. of discharge vapours, gases	α_w	0.60	0.50	0.60	0.66
Coeff. of discharge fluids	α_w	-	0.39	0.45	0.48

Dimensions in mm.

Safety Valves
Type 06800 with bellow seal

Discharge capacities
Calculation of flow rate acc. to AD2000-Merkblatt A2 / DIN EN ISO 4126-1

Medium:
Air in m^3/h at 0°C and 1013.25 mbar
Water in kg/h
Saturated steam in kg/h

The capacity indicated below is for a fully opened valve.
Maximum allowed back pressure: 15% of set pressure.
For nominal size GW 1/2, d_0 = 15.0 mm the back pressure reduces the blow off performance of the safety valve (see diagram 06800-1/2, d_0 = 15.0)

d_0 - orifice
A_0 - flow area

Set pressure in bar (g)	GW	1/2	1/2	3/4	1	1/2	1/2	3/4	1	1/2	3/4	1
	d_0(mm)	12.5	15.0	20.0	23.0	12.5	15.0	20.0	23.0	15.0	20.0	23.0
	A_0(mm^2)	122.7	176.7	314.2	415.5	122.7	176.7	314.2	415.5	176.7	314.2	415.5
	Medium	**Air**				**Saturated steam**				**Water**		
3.0		217	260	555	807	169	203	433	630	6374	13075	18445
4.0		272	327	697	1013	211	254	541	787	7360	15098	21299
5.0		328	394	840	1222	253	304	648	943	8229	16880	23813
6.0		383	460	982	1428	295	354	754	1097	9015	18492	26085
7.0		439	527	1124	1635	336	403	860	1251	9737	19973	28175
8.0		496	595	1269	1847	377	452	965	1404	10409	21352	30121
9.0		551	662	1412	2054	418	502	1070	1557	11041	22647	31948
10.0		608	730	1557	2265	459	551	1174	1709	11638	23872	33676
12.0		720	864	1842	2680	540	648	1383	2011	12749	26151	36890
14.0		831	997	2127	3095	621	745	1590	2313	13770	28246	39846
16.0		942	1131	2412	3509	702	842	1797	2615	14721	30197	42597
18.0		1054	1265	2698	3924	783	940	2005	2916	15614	32028	45181
20.0		1176	1412	3011	4381	864	1037	2212	3218	16458	33761	47625
22.0		1289	1546	3299	4799	945	1134	2420	3520	17262	35409	49950
25.0		1457	1749	3731	5427	1067	1281	2732	3975	18401	37746	53247

Diagram 06800-1/2, d0=15,0

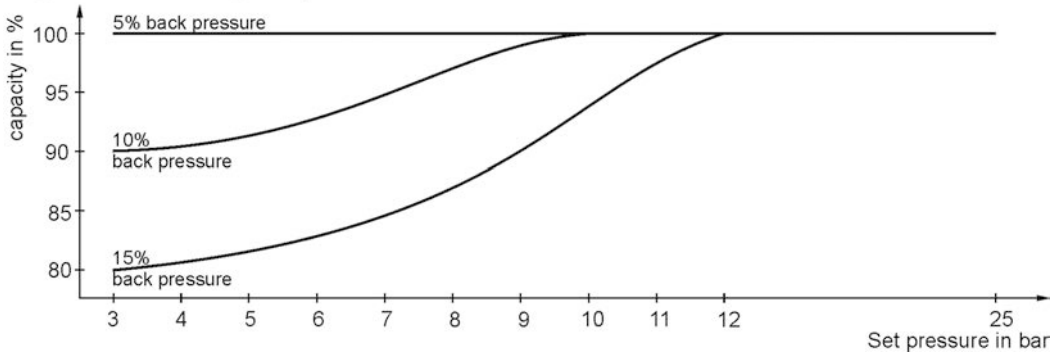

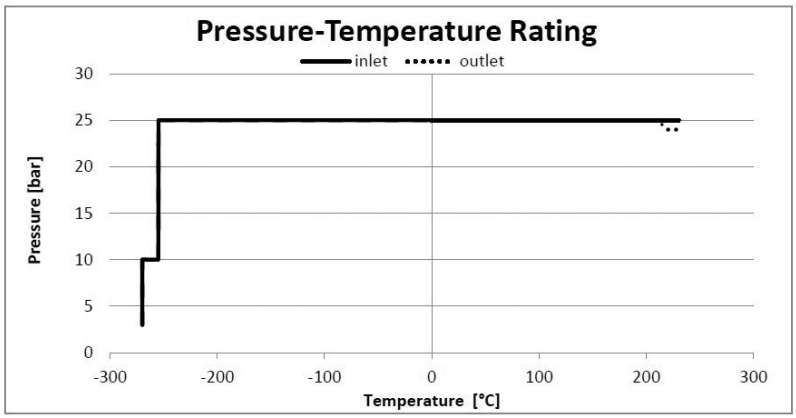

Edition 2022-11

Safety Valves
Type 06805 with bellow seal

Stainless steel bellow sealed Safety Valves, angle type, PN40, type tested TÜV-SV.1105. S/G/L orifice d_0 = 12.5 mm TÜV-SV.1105. only S/G

Standard safety valve,
metal to metal seated, closed bonnet, with lifting device
"cleaned and degreased for oxygen service"

Part No. 06805.X.0000
Inlet: female thread type G (BSPP) acc. to ISO 228/1,
Outlet: female thread type G (BSPP) acc. to ISO 228/1
Part No. 06805.X.5000
Inlet: female thread NPT acc. to ANSI B 1.20.1,
Outlet: female thread type G (BSPP) acc. to ISO 228/1
Part No. 06805.X.6000
Inlet: female thread NPT acc. to ANSI B 1.20.1,
Outlet: female thread NPT acc. to ANSI B 1.20.1

Applications:
Provided as safety device for protection against excessive pressure in stationary and moveable gas cylinders and pressure vessels. Approved for non-inflammable and inflammable vapours, gases and fluids.
Working temperature: -270°C / -454°F (3K) up to +225°C / +437°F (498K)
Maximum allowed back pressure: 15% of set pressure, pressure-temperature must be observed

Materials		DIN EN	ASME/ASTM
1	Inlet body	1.4571	A 276 Grade 316Ti
2	Outlet body	1.4308	A 351 CF8
3	Disc	1.4541	A 276 Grade 321
4	Bellow	1.4571	A 276 Grade 316Ti
5	Bellow stem	1.4571	A 276 Grade 316Ti
6	Stem	CW453K	B 103 UNS C52100
7	Bonnet	1.4301	A 276 Grade 304
8	Spring	1.4571	A 276 Grade 316Ti
9	Lifting cap	1.4301	A 276 Grade 304
10	Lever	1.4408	A 351 CF8M

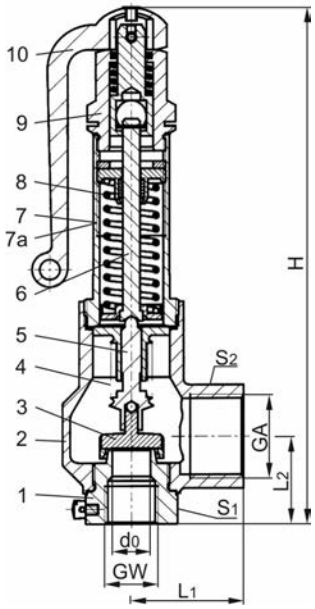

Important:
For nominal size GW 1/2, d_0 = 15.0 mm the back pressure reduces the blow off performance of the safety valve (see diagram 06805-1/2, d_0 = 15.0).

Type 6805	Technical data					
Nominal size	**GW**	**1/2**	**1/2**	**3/4**	**3/4**	**1**
Orifice	d_0	12.5	15	15	20	23
Dimension code	.X.	1204	1504	1506	2006	2310
Set pressure range	bar	3.0-25.0	3.0-25.0	3.0-25.0	3.0-25.0	3.0-25.0
Outlet	GA	G 1	G 1	G 1	G 1-1/4	G 1-1/2
Height	H	205	210	215	243	295
Length	L_1	44	44	44	51	56
Length	L_2	35	35	40	48	58
Wrench size across flats	S_1	36	36	41	41	50
Wrench size across flats	S_2	41	41	41	50	55
Weight	ca. kg	1.24	1.21	1.31	1.88	3.15
Coeff. of discharge vapours, gases	α_w	0.60	0.50	0.50	0.60	0.66
Coeff. of discharge fluids	α_w	-	0.39	0.39	0.45	0.48

Dimensions in mm.

Safety Valves
Type 06805 with bellow seal

Discharge capacities
Calculation of flow rate acc. to AD2000-Merkblatt A2 / DIN EN ISO 4126-1

Medium:
Air in m^3/h at 0°C and 1013.25 mbar
Water in kg/h
Saturated steam in kg/h

The capacity indicated below is for a fully opened valve.
Maximum allowed back pressure: 15% of set pressure.
For nominal size GW 1/2, d_0 = 15.0 mm the back pressure reduces the blow off performance of the safety valve (see diagram 06805-1/2, d_0 = 15.0).

d_0 - orifice
A_0 - flow area

Set pressure in bar (g)	GW	1/2	1/2 & 3/4	3/4	1	1/2	1/2 & 3/4	3/4	1	1/2 & 3/4	3/4	1
	d_0(mm)	12.5	15.0	20.0	23.0	12.5	15.0	20.0	23.0	15.0	20.0	23.0
	A_0(mm^2)	122.7	176.7	314.2	415.5	122.7	176.7	314.2	415.5	176.7	314.2	415.5
	Medium	**Air**				**Saturated steam**				**Water**		
3.0		217	260	555	807	169	203	433	630	6374	13075	18445
4.0		272	327	697	1013	211	254	541	787	7360	15098	21299
5.0		328	394	840	1222	253	304	648	943	8229	16880	23813
6.0		383	460	982	1428	295	354	754	1097	9015	18492	26085
7.0		439	527	1124	1635	336	403	860	1251	9737	19973	28175
8.0		496	595	1269	1847	377	452	965	1404	10409	21352	30121
9.0		551	662	1412	2054	418	502	1070	1557	11041	22647	31948
10.0		608	730	1557	2265	459	551	1174	1709	11638	23872	33676
12.0		720	864	1842	2680	540	648	1383	2011	12749	26151	36890
14.0		831	997	2127	3095	621	745	1590	2313	13770	28246	39846
16.0		942	1131	2412	3509	702	842	1797	2615	14721	30197	42597
18.0		1054	1265	2698	3924	783	940	2005	2916	15614	32028	45181
20.0		1176	1412	3011	4381	864	1037	2212	3218	16458	33761	47625
22.0		1289	1546	3299	4799	945	1134	2420	3520	17262	35409	49950
25.0		1457	1749	3731	5427	1067	1281	2732	3975	18401	37746	53247

Diagram 06805-1/2, d0=15,0

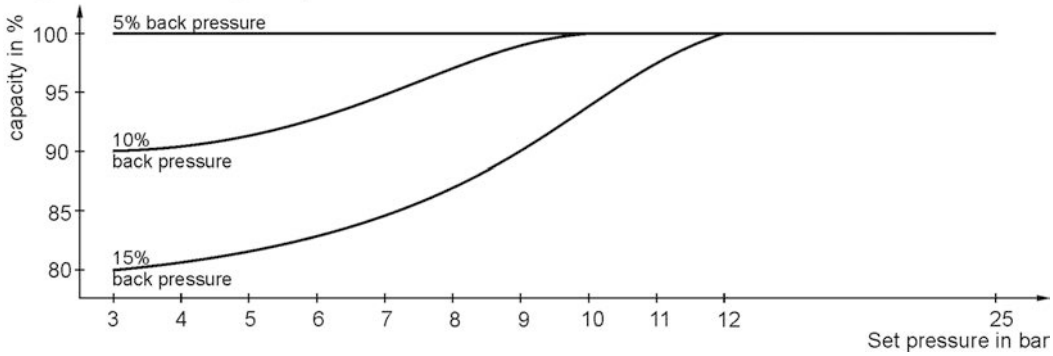

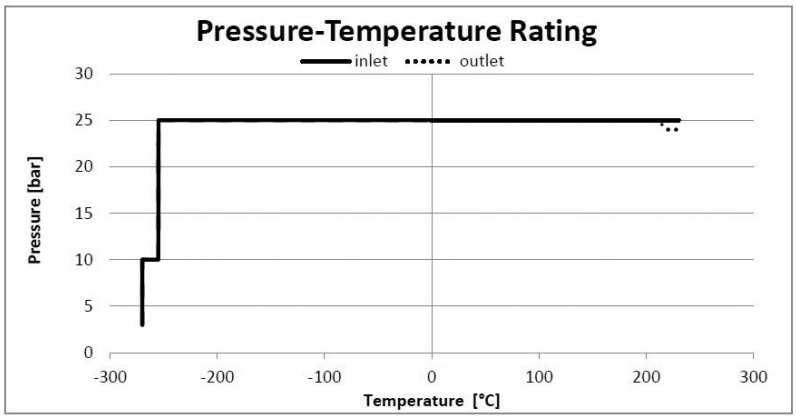

Edition 2022-11

Safety Valves
Type 06810, Type 06815

Safety Valves, angle type, stainless steel, type tested, TÜV-SV.1130. S/G/L

Standard safety valve
metal to metal seated, "cleaned and degreased for oxygen service"
closed bonnet, gastight cap or lifting device
Inlet: male thread type G (BSPP) acc. to ISO 228/1
Outlet: female thread type G (BSPP) acc. to ISO 228/1

Part No. 06810.X.000000M (Pmax 16.0 bar)
Part No. 06810.X.000000H (Pmax 550.0 bar) stellited version
with gastight cap

Part No. 06815.X.000000M (Pmax 16.0 bar)
Part No. 06815.X.000000H (Pmax 300.0 bar) stellited version
with lifting device

Available options - on request only:
· Flange-, NPT- or Tri-Clamp connection for in- and outlet

Applications:
Provided as safety device for protection against excessive pressure in gas cylinders and pressure vessels.
Approved for gases, vapours and liquids. Working temperature: -270°C / -454°F (3K) up to +400°C / +752°F (673K)
Pressure-temperature must be observed, suitable for horizontal installation from 20 bar up to 300 bar

Materials		DIN EN	ASME/ASTM
1	Outlet body	1.4408	A 351 CF 8M
2	Inlet body	1.4571	A 276 Grade 316Ti
3	Disc	1.4571	A 276 Grade 316Ti
5	Stem	1.4404	A 276 Grade 316L
6	Bonnet	1.4408	A 351 CF8M
7	Spring	1.4571	A 313 Grade 316Ti
8	Cap	1.4408	A 351 CF8M
9	Lifting cap	1.4408	A 351 CF8M
10	Lever	1.4301	A 276 Grade 304
Spare Parts			
2	Inlet body	1.4571	316Ti
3	Disc	1.4571	316Ti
3.1	Split pin	1.4310	301
11	Gasket	Graphite	
12	Gasket	PTFE	
13	Gasket	PTFE	
14	O-ring	FPM (VITON)	

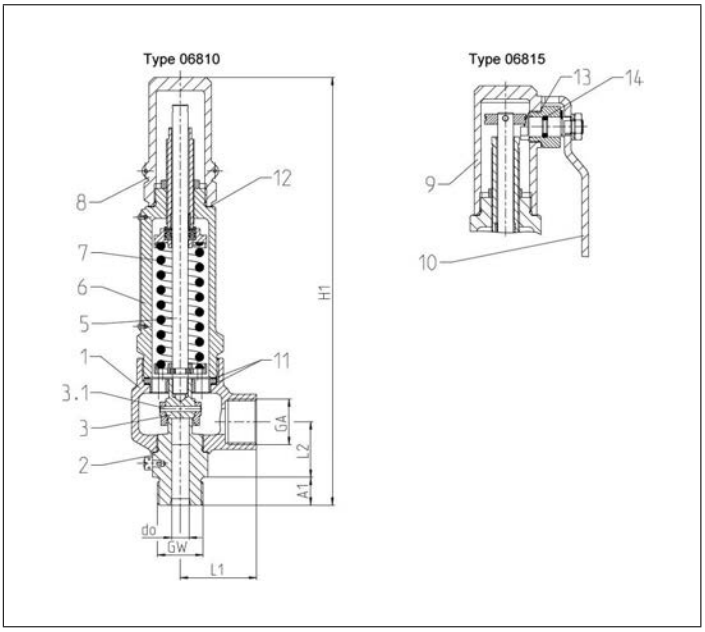

Type 06810, 06815	Technical data							
Nominal size	**GW**	**1/2**	**1/2**	**3/4**	**3/4**	**1/2**	**1/2**	**3/4**
Orifice	d_0	6.0	6.0	6.0	6.0	10.0	10.0	10.0
Dimension code	.X.	0622	0623	0632	0633	1022	1023	1033
Set pressure range	bar	30-300	30-300	30-550	30-550	0.5-180	0.5-180	0.5-180
Outlet	GA	1/2	3/4	1/2	3/4	1/2	3/4	3/4
Height	H_1	245	245	247	247	245	245	245
Length	L_1	44	44	44	44	44	44	44
Length	L_2	32	32	32	32	32	32	32
Length	A_1	14	14	16	16	14	14	16
Weight 06810	ca. kg	1.8	1.8	1.8	1.8	1.8	1.8	1.8
Weight 06815	ca. kg	2.0	2.0	2.0	2.0	2.0	2.0	2.0
Coeff. of discharge gases, vapours	α_w	0.52	0.52	0.52	0.52	0.5	0.5	0.5
Coeff. of discharge fluids	α_w	0.42	0.42	0.42	0.42	0.5	0.5	0.5

Dimensions in mm.

Safety Valves
Type 06810, Type 06815

Discharge capacities
Calculation of flow rate acc. to AD2000-Merkblatt A2 / DIN EN ISO 4126-1

Medium:
A = Saturated steam in kg/h
B = Air in m^3/h at 0°C and 1013,25 mbar
C = Water in kg/h at 20°C

The capacity indicated below is for a fully opened valve.

d_0 - orifice
A_0 - flow area

Set pressure in bar (g)	GW	1/2			3/4		
	d_0(mm)	6.0			6.0		
	A_0(mm^2)	28.27			28.27		
	Medium	**A**	**B**	**C**	**A**	**B**	**C**
30.0		254	350	3473	254	350	3473
40.0		336	468	4011	336	468	4011
60.0		503	708	4912	503	708	4912
80.0		670	953	5672	670	953	5672
100.0		845	1203	6341	845	1203	6341
120.0		1032	1451	6947	1032	1451	6947
140.0		1230	1703	7503	1230	1703	7503
160.0		1437	1952	8021	1437	1952	8021
180.0		1688	2194	8508	1688	2194	8508
200.0		2215	2429	8968	2215	2429	8968
220.0		-	2659	9406	-	2659	9406
240.0		-	2893	9824	-	2893	9824
260.0		-	3133	10225	-	3133	10225
280.0		-	3374	10611	-	3374	10611
300.0		-	3614	10983	-	3614	10983
320.0		-	-	-	-	3854	11344
340.0		-	-	-	-	4094	11693
360.0		-	-	-	-	4334	12032
380.0		-	-	-	-	4575	12361
400.0		-	-	-	-	4815	12683
420.0		-	-	-	-	5055	12996
440.0		-	-	-	-	5295	13302
460.0		-	-	-	-	5535	13601
480.0		-	-	-	-	5776	13893
500.0		-	-	-	-	6016	14180
520.0		-	-	-	-	6256	14460
550.0		-	-	-	-	6616	14872

Pressure-Temperature Rating

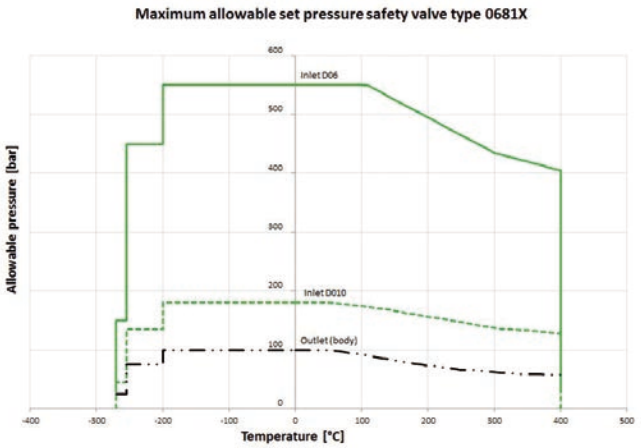

Safety Valves
Type 06810, Type 06815

Discharge capacities
Calculation of flow rate acc. to AD2000-Merkblatt A2 / DIN EN ISO 4126-1

Medium:
A = Saturated steam in kg/h
B = Air in m^3/h at 0°C and 1013,25 mbar
C = Water in kg/h at 20°C

The capacity indicated below is for a fully opened valve.

d_0 - orifice
A_0 - flow area

Set pressure in bar (g)	GW	1/2 & 3/4		
	d_0(mm)	10.0		
	A_0(mm^2)	78.5		
	Medium	**A**	**B**	**C**
0.5		33	40	1549
1.0		44	55	2097
2.0		68	86	2966
3.0		90	116	3632
4.0		113	145	4194
5.0		135	175	4689
6.0		157	205	5137
7.0		179	234	5548
8.0		201	264	5931
9.0		223	294	6291
10.0		245	324	6631
12.0		288	384	7264
14.0		331	443	7846
16.0		374	503	8388
18.0		418	562	8897
20.0		461	627	9378
25.0		569	777	10485
30.0		678	936	11486
35.0		788	1087	12406
40.0		899	1249	13262
45.0		1009	1402	14067
50.0		1120	1568	14828
60.0		1343	1890	16243
70.0		1566	2216	17545
80.0		1791	2546	18756
90.0		2020	2878	19894
100.0		2256	3212	20970
120.0		2756	3877	22971
130.0		3018	4197	23909
140.0		-	4549	24812
160.0		-	5213	26525
180.0		-	5861	28134

Safety Valves

Type 06810, Type 06815 - Sealing plate

Safety Valves, angle type, stainless steel, type tested, TÜV-SV.1130. S/G/L

Standard safety valve
with soft valve seal, " cleaned and degreased "
closed bonnet, gastight cap or lifting device
Inlet: male thread type G (BSPP) acc. to ISO 228/1
Outlet: female thread type G (BSPP) acc. to ISO 228/1

Part No. 06810.X.000001L (Pmax 150.0 bar)
with gastight cap

Part No. 06815.X.000001L (Pmax 150.0 bar)
with lifting device

Available options - on request only:
· Flange-, NPT- or Tri-Clamp connection for in- and outlet

Applications:
Provided as safety device for protection against excessive pressure in gas cylinders and pressure vessels. Approved for gases, vapours and liquids. Working temperature: -270°C / -454°F (3K) up to +300°C / +572°F (573K)
Pressure-temperature must be observed, suitable for horizontal installation from 20 bar

Materials		DIN EN	ASME/ASTM
1	Outlet body	1.4408	A 351 CF8M
2	Inlet body	1.4571	A 276 Grade 316Ti
3	Disc	1.4571	A 276 Grade 316Ti
4	Sealing plate	VESPEL	
5	Stem	1.4404	A 276 Grade 316L
6	Bonnet	1.4408	A 351 CF8M
7	Spring	1.4571	A 313 Grade 316Ti
8	Cap	1.4408	A 351 CF8M
9	Lifting cap	1.4408	A 351 CF8M
10	Lever	1.4301	A 276 Grade 304
Spare Parts			
2	Inlet body	1.4571	316Ti
3.1	Split pin	1.4571	316Ti
4	Sealing plate	VESPEL	
11	Gasket	1.4404 Graphite	316L Graphite
12	Gasket	PTFE	
13	Gasket	PTFE	
14	O-ring	FPM (VITON)	

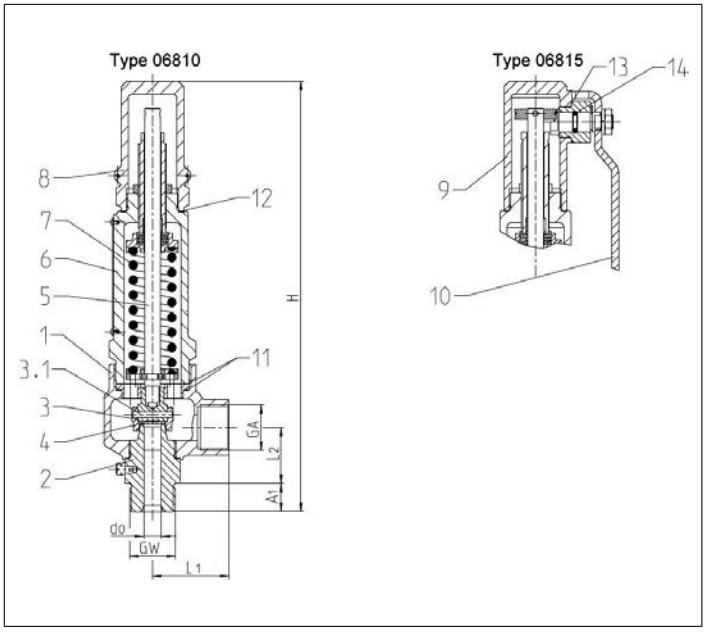

Type 06810, 06815	Technical Data			
D_0	[mm]	10		
Inlet	GW	1/2	1/2	3/4
Outlet	GW	1/2	3/4	3/4
Dimension code	.X.	1022	1023	1033
Height	H	245.0	245.0	245.0
Length	L1	44.0	44.0	44.0
Length	L2	32.0	32.0	32.0
Length	A1	14.0	14.0	16.0
Weight 06810	ca. kg	1.8	1.8	1.8
Weight 06815	ca. kg	2.0	2.0	2.0
Coeff. of discharge	α_wS/G/L	0.50	0.50	0.50
Min. set pressure	bar-g	1.5	1.5	1.5
Max. set pressure	bar-g	150.0	150.0	150.0
Min. temperature	°C	-270	-270	-270
Max. temperature	°C	+300	+300	+300

Dimensions in mm.

Edition 2022-11

Pressure-Temperature Rating

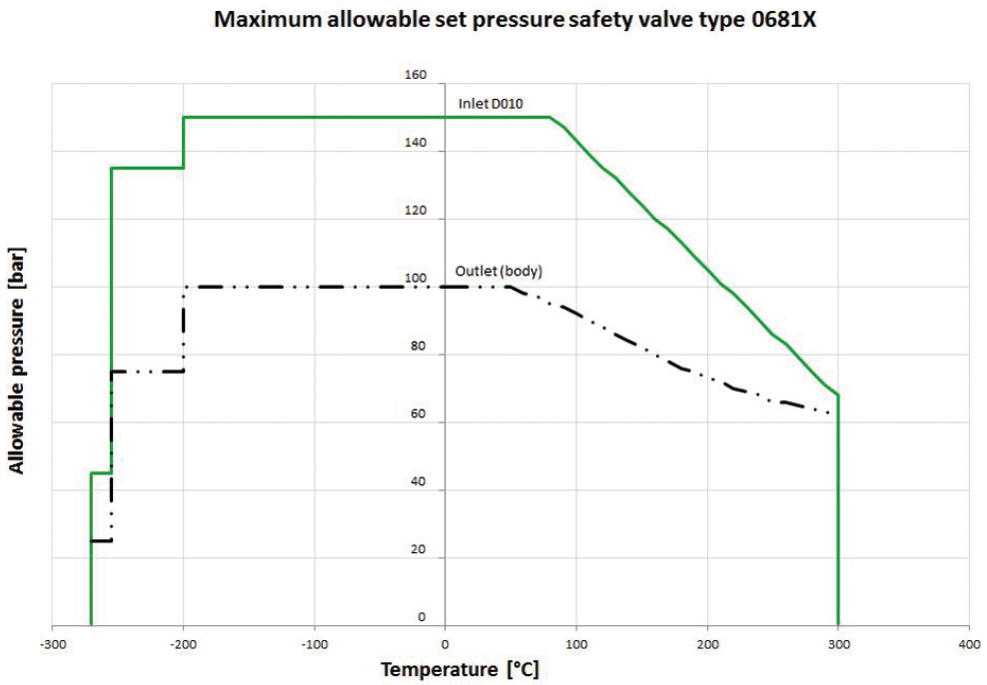

Type 06810, Type 06815 - Sealing plate

Discharge capacities
Calculation of flow rate acc. to AD2000-Merkblatt A2 / DIN EN ISO 4126-1

Medium:
A = Saturated steam in kg/h
B = Air in m^3/h at 0°C and 1013,25 mbar
C = Water in kg/h at 20°C

The capacity indicated below is for a fully opened valve.

d_0 - orifice
A_0 - flow area

Set pressure in bar (g)	GW	1/2, 3/4 & 1		
	d_0(mm)	10.0		
	A_0(mm^2)	78.5		
	Medium	**A**	**B**	**C**
0.2		-	-	-
0.5		-	40	1549
1.0		-	55	2097
2.0		-	86	2966
3.0		-	116	3632
4.0		-	145	4194
5.0		-	175	4689
6.0		-	205	5137
7.0		-	234	5548
8.0		-	264	5931
9.0		-	294	6291
10.0		-	324	6631
15.0		-	472	6947
20.0		-	627	9378
30.0		-	936	11485
40.0		-	1249	13262
50.0		-	1568	14828
60.0		-	1890	16243
65.0		-	2045	16906
70.0		-	2216	-
80.0		-	2546	-
90.0		-	2878	-
100.0		-	3212	-
110.0		-	3544	-
120.0		-	3877	-
140.0		-	4549	-
150.0		-	4872	-

Safety Valves
Type 06810, Type 06815 - O-ring

Safety Valves, angle type, stainless steel, type tested, TÜV-SV.1130. S/G/L

Standard safety valve
with O-ring valve seal, "cleaned and degreased"
closed bonnet, gastight cap or lifting device
Inlet: male thread type G (BSPP) acc. to ISO 228/1
Outlet: female thread type G (BSPP) acc. to ISO 228/1

Part No. 06810.X.000002N (Pmax 15.99 bar)
Part No. 06815.X.000002N (Pmax 15.99 bar)
with NBR O-ring valve seal

Part No. 06810.X.000002F (Pmin 16.00 bar, Pmax 180.0 bar)
Part No. 06815.X.000002F (Pmin 16.00 bar, Pmax 180.0 bar)
with FKM O-ring valve seal

Available options - on request only:
· Flange-, NPT- or Tri-Clamp connection for in- and outlet

Applications:
Provided as safety device for protection against excessive pressure in gas cylinders and pressure vessels. Approved for gases and liquids. Working temperature: 0°C / 32°F (273K) up to 70°C / 158°F (343K), suitable for horizontal installation from 20 bar.

Materials		DIN EN	ASME/ASTM
1	Outlet body	1.4408	A 351 CF8M
2	Inlet body	1.4571	A 276 Grade 316Ti
3	Disc	1.4571	A 276 Grade 316Ti
4	O-ring	NBR or FKM	
5	Stem	1.4404	A 276 Grade 316L
6	Bonnet	1.4408	A 351 CF8M
7	Spring	1.4571	A 313 Grade 316Ti
8	Cap	1.4408	A 351 CF8M
9	Lifting cap	1.4408	A 351 CF8M
10	Lever	1.4301	A 276 Grade 304
Spare Parts			
3	Complete disc	1.4571+NBR or FKM	316Ti + NBR or FKM
4	O-ring + screw	NBR or FKM	
11	Gasket	1.4404 Graphite	316L Graphite
12	Gasket	PTFE	
13	Gasket	PTFE	
14	O-ring	FPM (VITON)	

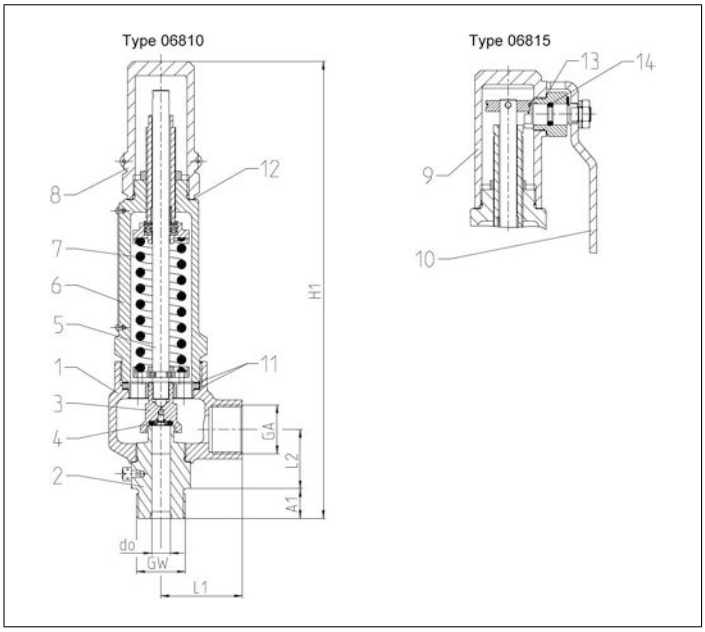

Type 06810, 06815	Technical Data			
D_0	[mm]	10		
Inlet	GW	1/2	1/2	3/4
Outlet	GW	1/2	3/4	3/4
Dimension code	.X.	1022	1023	1033
Height	H1	245.0	245.0	245.0
Length	L1	44.0	44.0	44.0
Length	L2	32.0	32.0	32.0
Length	A1	14.0	14.0	16.0
Weight 06810	ca. kg	1.8	1.8	1.8
Weight 06815	ca. kg	2.0	2.0	2.0
Coeff. of discharge	α_wS/G/L	0.50	0.50	0.50
Min. set pressure	bar-g	3.0	3.0	3.0
Max. set pressure	bar-g	180.0	180.0	180.0

Dimensions in mm.

Safety Valves

Type 06810, Type 06815 - O-ring

Discharge capacities
Calculation of flow rate acc. to AD2000-Merkblatt A2 / DIN EN ISO 4126-1

Medium:
A = Saturated steam in kg/h
B = Air in m^3/h at 0°C and 1013,25 mbar
C = Water in kg/h at 20°C

The capacity indicated below is for a fully opened valve.

d_0 - orifice
A_0 - flow area

Set pressure in bar (g)	GW	1/2, 3/4 & 1		
	d_0(mm)	10.0		
	A_0(mm^2)	78.5		
	Medium	**A**	**B**	**C**
3.0		-	116	3632
4.0		-	145	4194
5.0		-	175	4689
6.0		-	205	5137
7.0		-	234	5548
8.0		-	264	5931
9.0		-	294	6291
10.0		-	324	6631
12.0		-	384	7264
14.0		-	443	7846
16.0		-	503	8388
18.0		-	562	8897
20.0		-	627	9378
25.0		-	777	10485
30.0		-	936	11486
35.0		-	1087	12406
40.0		-	1249	13262
45.0		-	1402	14067
50.0		-	1568	14828
60.0		-	1890	16243
70.0		-	2216	17545
80.0		-	2546	18756
90.0		-	2878	19894
100.0		-	3212	20970
110.0		-	3531	21993
120.0		-	3877	22971
130.0		-	4197	23909
140.0		-	4549	24812
150.0		-	4872	25683
160.0		-	5213	26525
170.0		-	5537	27341
180.0		-	5861	28134

Safety Valves
Type 06820

Safety Valves, angle type, stainless steel, type tested, TÜV-SV.1130. S/G/L

Standard safety valve
metal to metal seated, "cleaned and degreased for oxygen service"
closed bonnet, gastight cap
Inlet: male thread type G (BSPP) acc. to ISO 228/1
Outlet: female thread type G (BSPP) acc. to ISO 228/1

Part No. 06820.X.000000H (Pmax 550.0 bar) stellited version
with gastight cap

Available options - on request only:
· Flange- or NPT- connection for in- and outlet
· Special materials such as Monel, Hastelloy or Duplex for medium wetted parts

Applications:
Provided as safety device for protection against excessive pressure in gas cylinders and pressure vessels. Approved for gases, vapours and liquids. Working temperature: -270°C / -454°F (3K) up to +400°C / +752°F (673K)
Pressure-temperature must be observed, suitable for horizontal installation up to 300 bar

Materials		DIN EN	ASME/ASTM
1	Outlet body	1.4404	A 276 Grade 316L
2	Inlet body	1.4571	A 276 Grade 316Ti
3	Disc	1.4571	A 276 Grade 316Ti
5	Stem	1.4404	A 276 Grade 316L
6	Bonnet	1.4404	A 276 Grade 316L
7	Spring	1.4571	A 313 Grade 316Ti
8	Cap	1.4404	A 276 Grade 316L
Spare Parts			
2	Inlet body	1.4571	316Ti
3	Disc	1.4571	316Ti
3.1	Split pin	1.4310	301
11	Gasket	Graphite	
12	Gasket	Graphite	

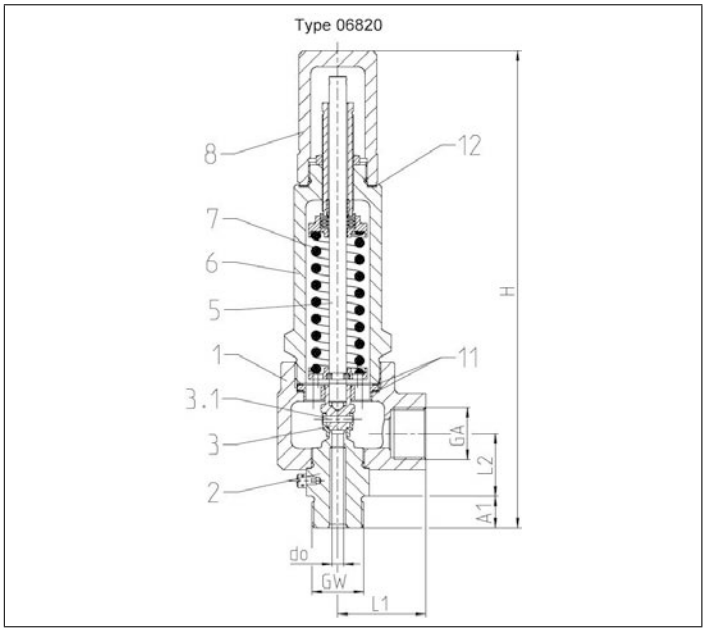

Type 06820	Technical data	
Nominal size	**GW**	**3/4**
Orifice	d_0	6.0
Dimension code	.X.	0633
Set pressure range	bar	30-550
Outlet	GA	3/4
Height	H_1	247
Length	L_1	45
Length	L_2	29
Length	A_1	16
Weight 06820	ca. kg	2.9
Coeff. of discharge gases, vapours	α_w	0.52
Coeff. of discharge fluids	α_w	0.42

Dimensions in mm.

Safety Valves
Type 06820

Discharge capacities
Calculation of flow rate acc. to AD2000-Merkblatt A2 / DIN EN ISO 4126-1

Medium:
A = Saturated steam in kg/h
B = Air in m^3/h at 0°C and 1013,25 mbar
C = Water in kg/h at 20°C

The capacity indicated below is for a fully opened valve.

d_0 - orifice
A_0 - flow area

Set pressure in bar (g)	GW	3/4		
	d_0(mm)	6.0		
	A_0(mm^2)	28.27		
	Medium	**A**	**B**	**C**
30.0		254	350	3473
40.0		336	468	4011
60.0		503	708	4912
80.0		670	953	5672
100.0		845	1203	6341
120.0		1032	1451	6947
140.0		1230	1703	7503
160.0		1437	1952	8021
180.0		1688	2194	8508
200.0		2215	2429	8968
220.0		-	2659	9406
240.0		-	2893	9824
260.0		-	3133	10225
280.0		-	3374	10611
300.0		-	3614	10983
320.0		-	3854	11344
340.0		-	4094	11693
360.0		-	4334	12032
380.0		-	4575	12361
400.0		-	4815	12683
420.0		-	5055	12996
440.0		-	5295	13302
460.0		-	5535	13601
480.0		-	5776	13893
500.0		-	6016	14180
520.0		-	6256	14460
550.0		-	6616	14872

Pressure-Temperature Rating

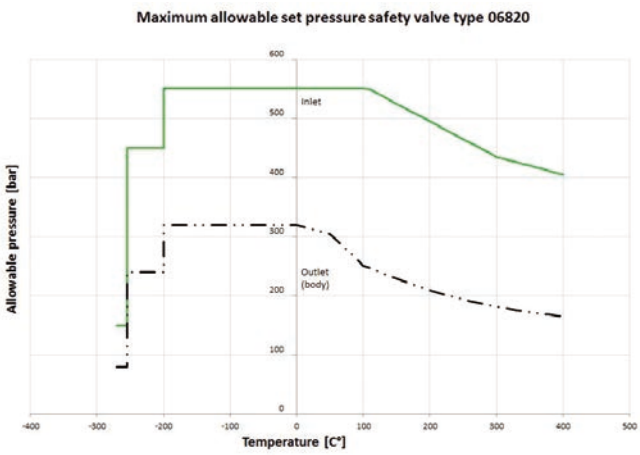

Safety Valves
Type 06850, Type 06855

Safety Valves, angle type, stainless steel, type tested, TÜV-SV.1130. S/G/L

Standard safety valve
metal to metal seated, "cleaned and degreased for oxygen service"
closed bonnet, gastight cap or lifting device
Inlet: male thread type G (BSPP) acc. to ISO 228/1
Outlet: female thread type G (BSPP) acc. to ISO 228/1

Part No. 06850.X.000000M (Pmax 20.0 bar)
Part No. 06850.X.000000H (Pmax 250.0 bar) stellited version
with gastight cap
Part No. 06855.X.000000M (Pmax 20.0 bar)
Part No. 06855.X.000000H (Pmax 250.0 bar) stellited version
with lifting device
Available options - on request only:
· Flange-, NPT- or Tri-Clamp connection for in- and outlet

Applications:
Provided as safety device for protection against excessive pressure in gas cylinders and pressure vessels.
Approved for gases, vapours and liquids. Working temperature: -270°C / -454°F (3K) up to +400°C / +752°F (673K)
Pressure-temperature must be observed, suitable for horizontal installation from 20 bar

Materials		DIN EN	ASME/ASTM
1	Outlet body	1.4408	A 351 CF8M
2	Inlet body	1.4571	A 276 Grade 316Ti
3	Disc	1.4571	A 276 Grade 316Ti
5	Stem	1.4404	A 276 Grade 316L
6	Bonnet	1.4408	A 351 CF8M
7	Spring	1.4571	A 313 Grade 316Ti
8	Cap	1.4408	A 351 CF8M
9	Lifting cap	1.4408	A 351 CF8M
10	Lever	1.4301	A 276 Grade 304
Spare Parts			
2	Inlet body	1.4571	316Ti
3	Disc	1.4571	316Ti
3.1	Split pin	1.4310	301
11	Gasket	1.4404 Graphite	316L Graphite
12	Gasket	PTFE	
13	Gasket	PTFE	
14	O-ring	FPM (VITON)	

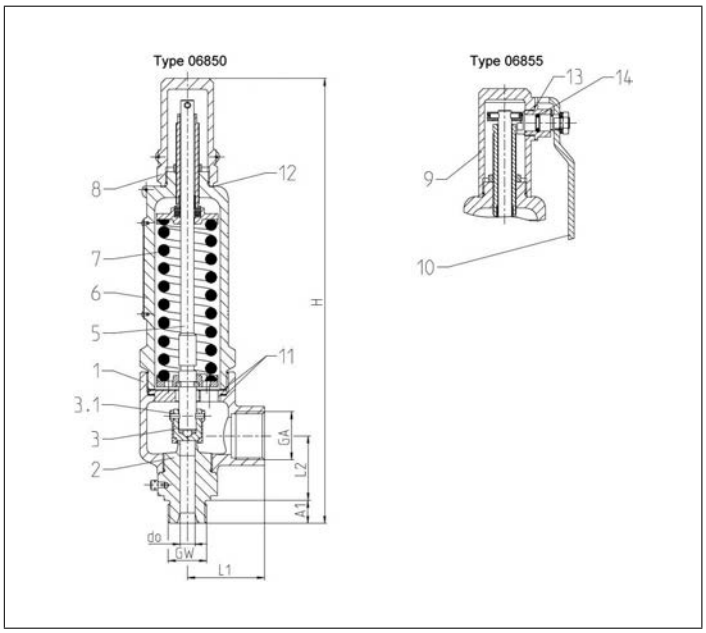

KOREA GAS SAFETY CORPORATION

Type 06850, 06855	Technical data									
Orifice	**[mm]**	**10**			**14**					
Inlet	GW	1/2	3/4	1	3/4	3/4	3/4	1	1	1
Outlet	GW	1	1	1	1	1-1/4	1-1/2	1	1-1/4	1-1/2
Dimension code	.X.	1024	1034	1044	1434	1435	1436	1444	1445	1446
Height	H	305.0	307.0	309.0	310.5	310.5	310.5	312.5	312.5	312.5
Length	L1	53.0	53.0	53.0	55.0	55.0	55.0	55.0	55.0	55.0
Length	L2	44.5	44.5	44.5	48.2	48.2	48.2	48.2	48.2	48.2
Length	A1	14.0	16.0	18.0	16.0	16.0	16.0	18.0	18.0	18.0
Weight 06850	ca. kg	3.2	3.2	3.2	3.4	3.4	3.4	3.4	3.4	3.4
Weight 06855	ca. kg	3.4	3.4	3.4	3.6	3.6	3.6	3.6	3.6	3.6
coefficient of discharge	α_wS/G	0.84	0.84	0.84	0.70	0.70	0.70	0.70	0.70	0.70
coefficient of discharge	α_wL	0.68	0.68	0.68	*	*	*	*	*	*
Min. set pressure	bar-g	0.5	0.5	0.5	0.5	0.5	0.5	0.5	0.5	0.5
Max. set pressure	bar-g	250.0	250.0	250.0	200.0	200.0	200.0	200.0	200.0	200.0
Min. temperature	°C	-270	-270	-270	-270	-270	-270	-270	-270	-270
Max. temperature	°C	+400	+400	+400	+400	+400	+400	+400	+400	+400

Dimensions in mm. * 0.20-11.50 bar=0.50 / 11.51-74.99 bar=0.49 / 75.00-200.00 bar=0.46

Safety Valves
Type 06850, Type 06855

Type 06850, 06855	Technical data						
Orifice	**[mm]**	**18**					
Inlet	GW	1	1	1-1/4	1-1/4	1-1/2	1-1/2
Outlet	GW	1-1/2	2	1-1/2	2	1-1/2	2
Dimension code	.X.	1846	1847	1856	1857	1866	1867
Height	H	304.0	304.0	304.0	304.0	306.0	306.0
Length	L1	60.0	63.0	60.0	63.0	60.0	63.0
Length	L2	49.0	53.0	49.0	53.0	49.0	53.0
Length	A1	18.0	18.0	20.0	20.0	22.0	22.0
Weight 06850	ca. kg	3.9	4.1	3.9	4.1	4.0	4.2
Weight 06855	ca. kg	4.1	4.3	4.1	4.3	4.2	4.4
coefficient of discharge	$\alpha_w S/G$	0.76	0.76	0.76	0.76	0.76	0.76
coefficient of discharge	$\alpha_w L$	0.50	0.50	0.50	0.50	0.50	0.50
Min. set pressure	bar-g	0.5	0.5	0.5	0.5	0.5	0.5
Max. set pressure	bar-g	110.0	110.0	110.0	110.0	110.0	110.0
Min. temperature	°C	-270	-270	-270	-270	-270	-270
Max. temperature	°C	+400	+400	+400	+400	+400	+400

Dimensions in mm.

Pressure-Temperature Rating

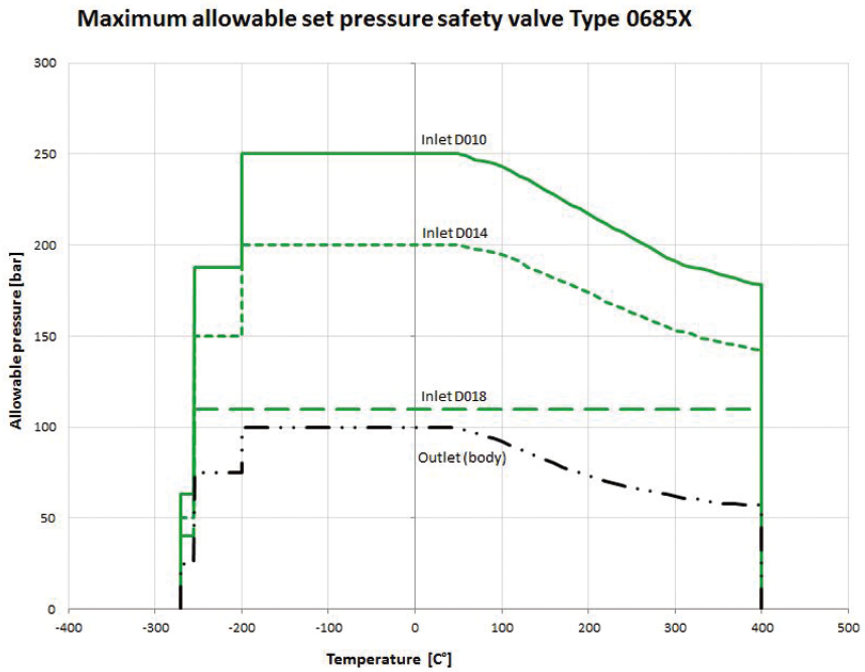

Safety Valves
Type 06850, Type 06855

Discharge capacities
Calculation of flow rate acc. to AD2000-Merkblatt A2 / DIN EN ISO 4126-1

Medium:
A = Saturated steam in kg/h
B = Air in m^3/h at 0°C and 1013,25 mbar
C = Water in kg/h at 20°C

The capacity indicated below is for a fully opened valve.

d_0 - orifice
A_0 - flow area

Set pressure in bar (g)	GW	1/2, 3/4 & 1			3/4 & 1			1, 1-1/4 & 1-1/2		
	d_0(mm)	10.0			14.0			18.0		
	A_0(mm^2)	78.5			153.9			254.0		
	Medium	**A**	**B**	**C**	**A**	**B**	**C**	**A**	**B**	**C**
0.5		47	56	2075	81	96	3035	127	152	5018
1.0		70	88	2852	116	146	4110	191	242	6794
2.0		112	143	4033	185	236	5813	320	407	9608
3.0		152	194	4940	248	317	7119	444	570	11768
4.0		189	244	5704	309	398	8220	555	715	13588
5.0		227	294	6377	370	480	9190	665	862	15192
6.0		264	344	6986	431	561	10068	774	1007	16642
7.0		301	393	7545	492	642	10874	882	1153	17976
8.0		338	444	8066	552	726	11625	990	1302	19217
9.0		375	494	8556	612	807	12330	1098	1448	20383
10.0		411	545	9018	671	890	12997	1205	1598	21485
15.0		593	794	11045	968	1298	15600	1738	2329	26314
20.0		774	1054	12754	1264	1721	18013	2269	3089	30385
30.0		1140	1572	15620	1861	2568	22062	3341	4609	37213
40.0		1510	2099	18037	2466	3428	25475	4425	6152	42970
50.0		1882	2634	20166	3075	4302	28481	5518	7720	48042
60.0		2256	3175	22091	3685	5186	31200	6614	9308	52628
70.0		2631	3723	23861	4297	6081	33700	7712	10914	56845
80.0		3009	4277	25508	4914	6985	33821	8819	12537	60769
90.0		3394	4835	27055	5543	7898	35872	9949	14174	64456
100.0		3791	5397	28519	6191	8814	37813	11112	15820	67942
110.0		4202	5931	29911	6864	9688	39658	12319	17387	71258
120.0		4629	6513	31241	7561	10637	41422	-	-	-
140.0		5520	7642	33744	9016	12482	44741	-	-	-
160.0		6448	8758	36074	-	14305	47830	-	-	-
180.0		7575	9847	38262	-	16083	50731	-	-	-
200.0		-	10898	40332	-	17801	53475	-	-	-
220.0		-	11931	42300	-	-	-	-	-	-
240.0		-	12983	44181	-	-	-	-	-	-
250.0		-	13522	45092	-	-	-	-	-	-

Safety Valves

Type 06850, Type 06855 - Sealing plate

Safety Valves, angle type, stainless steel, type tested, TÜV-SV.1130. G/L

standard safety valve
with soft valve seal, " cleaned and degreased "
closed bonnet, gastight cap or lifting device
Inlet: male thread type G (BSPP) acc. to ISO 228/1
Outlet: female thread type G (BSPP) acc. to ISO 228/1

Part No. 06850.X.000001L (Pmax 150.0 bar)
with gastight cap

Part No. 06855.X.000001L (Pmax 150.0 bar)
with lifting device

Available options - on request only:
· Flange-, NPT- or Tri-Clamp connection for in- and outlet

Applications:
Provided as safety device for protection against excessive pressure in gas cylinders and pressure vessels.
Approved for gases and liquids. Working temperature: -270°C / -454°F (3K) up to +300°C / +572°F (573K)
Pressure-temperature must be observed, suitable for horizontal installation from 20 bar

Materials		DIN EN	ASME/ASTM
1	Outlet body	1.4408	A 351 CF8M
2	Inlet body	1.4571	A 276 Grade 316Ti
3	Disc	1.4571	A 276 Grade 316Ti
4	Sealing plate	VESPEL	
5	Stem	1.4404	A 276 Grade 316L
6	Bonnet	1.4408	A 351 CF8M
7	Spring	1.4571	A 313 Grade 316Ti
8	Cap	1.4408	A 351 CF8M
9	Lifting cap	1.4408	A 351 CF8M
10	Lever	1.4301	A 276 Grade 304
Spare Parts			
2	Inlet body	1.4571	316Ti
3.1	Split pin	1.4571	316Ti
4	Sealing plate	VESPEL	
11	Gasket	1.4404 Graphite	316L Graphite
12	Gasket	PTFE	
13	Gasket	PTFE	
14	O-ring	FPM (VITON)	

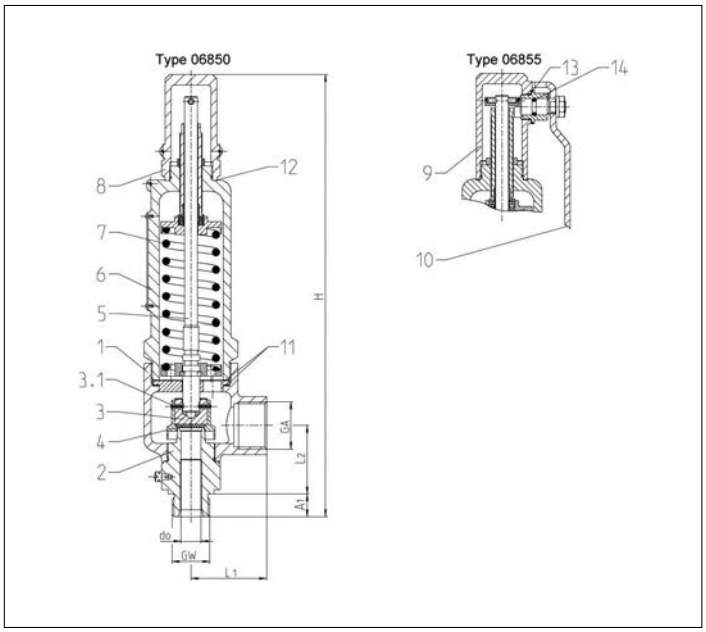

Typ 06850, 06855	Technical data									
Orifice	**[mm]**	**10**			**14**					
Inlet	GW	1/2	3/4	1	3/4	3/4	3/4	1	1	1
Outlet	GW	1	1	1	1	1-1/4	1-1/2	1	1-1/4	1-1/2
Dimension code	.X.	1024	1034	1044	1434	1435	1436	1444	1445	1446
Height	H	305.0	307.0	309.0	310.5	310.5	310.5	312.5	312.5	312.5
Length	L1	53.0	53.0	53.0	55.0	55.0	55.0	55.0	55.0	55.0
Length	L2	44.5	44.5	44.5	48.2	48.2	48.2	48.2	48.2	48.2
Length	A1	14.0	16.0	18.0	16.0	16.0	16.0	18.0	18.0	18.0
Weight 06850	ca. kg	3.2	3.2	3.2	3.4	3.4	3.4	3.4	3.4	3.4
Weight 06855	ca. kg	3.4	3.4	3.4	3.6	3.6	3.6	3.6	3.6	3.6
Coefficient of discharge	α_wS/G	0.84	0.84	0.84	0.70	0.70	0.70	0.70	0.70	0.70
Coefficient of discharge	α_wL	0.68	0.68	0.68	*	*	*	*	*	*
Min. set pressure	bar-g	0.5	0.5	0.5	0.5	0.5	0.5	0.5	0.5	0.5
Max. set pressure	bar-g	150.0	150.0	150.0	120.0	120.0	120.0	120.0	120.0	120.0
Min. temperature	°C	-270	-270	-270	-270	-270	-270	-270	-270	-270
Max. temperature	°C	+300	+300	+300	+300	+300	+300	+300	+300	+300

Dimensions in mm. * 0.20-11.50 bar=0.50 / 11.51-74.99 bar=0.49 / 75.00-120.00 bar=0.46

Edition 2022-11

Type 06850, Type 06855 - Sealing plate

Type 06850, 06855	Technical data						
Orifice	**[mm]**	**18**					
Inlet	GW	1	1	1-1/4	1-1/4	1-1/2	1-1/2
Outlet	GW	1-1/2	2	1-1/2	2	1-1/2	2
Dimension code	.X.	1846	1847	1856	1857	1866	1867
Height	H	304.0	304.0	304.0	304.0	306.0	306.0
Length	L1	60.0	63.0	60.0	63.0	60.0	63.0
Length	L2	49.0	53.0	49.0	53.0	49.0	53.0
Length	A1	18.0	18.0	20.0	20.0	22.0	22.0
Weight 06850	ca. kg	3.9	4.1	3.9	4.1	4.0	4.2
Weight 06855	ca. kg	4.1	4.3	4.1	4.3	4.2	4.4
Coefficient of discharge	$\alpha_w S/G$	0.76	0.76	0.76	0.76	0.76	0.76
Coefficient of discharge	$\alpha_w L$	0.50	0.50	0.50	0.50	0.50	0.50
Min. set pressure	bar-g	0.5	0.5	0.5	0.5	0.5	0.5
Max. set pressure	bar-g	110.0	110.0	110.0	110.0	110.0	110.0
Min. temperature	°C	-270	-270	-270	-270	-270	-270
Max. temperature	°C	+300	+300	+300	+300	+300	+300

Dimensions in mm.

Pressure-Temperature Rating

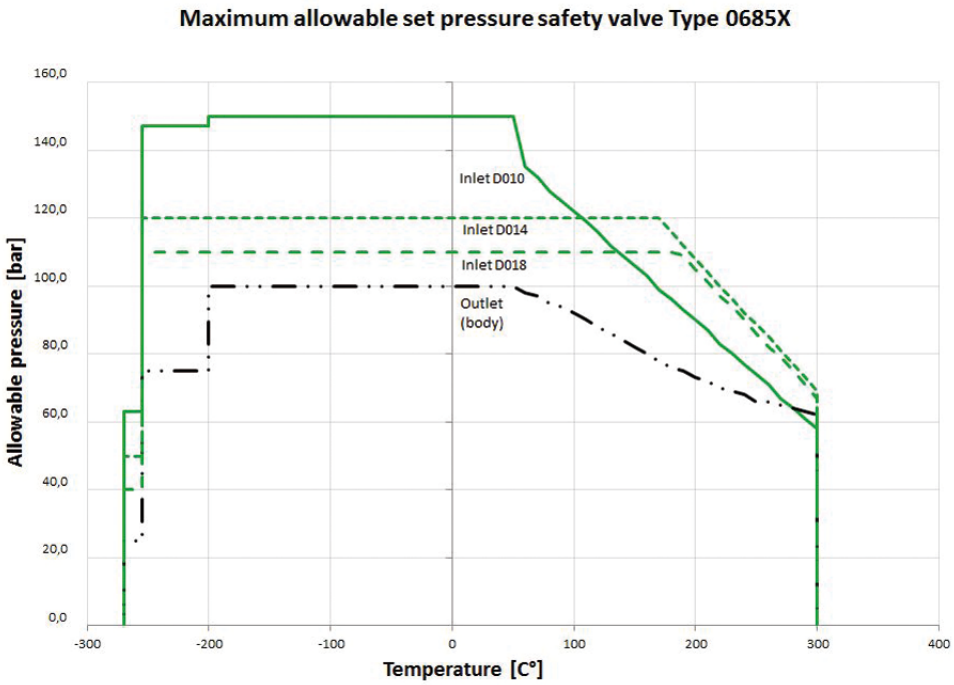

Safety Valves

Type 06850, Type 06855 - Sealing plate

Discharge capacities
Calculation of flow rate acc. to AD2000-Merkblatt A2 / DIN EN ISO 4126-1

Medium:
A = Saturated steam in kg/h*
B = Air in m^3/h at 0°C and 1013,25 mbar
C = Water in kg/h at 20°C

The capacity indicated below is for a fully opened valve.

d_0 - orifice
A_0 - flow area

Set pressure in bar (g)	GW	1/2, 3/4 & 1			3/4 & 1			1, 1-1/4 & 1-1/2		
	d_0(mm)	10.0			14.0			18.0		
	A_0(mm^2)	78.5			153.94			254.0		
	Medium	**A**	**B**	**C**	**A**	**B**	**C**	**A**	**B**	**C**
0.5		-	56	2075	-	96	3035	-	152	5018
1.0		-	88	2852	-	146	4110	-	242	6794
2.0		-	143	4033	-	236	5813	-	407	9608
3.0		-	194	4940	-	317	7119	-	570	11768
4.0		-	244	5704	-	398	8220	-	715	13588
5.0		-	294	6377	-	480	9190	-	862	15192
6.0		-	344	6986	-	561	10068	-	1007	16642
7.0		-	393	7545	-	642	10874	-	1153	17976
8.0		-	444	8066	-	726	11625	-	1302	19217
9.0		-	494	8556	-	807	12330	-	1448	20383
10.0		-	545	9018	-	890	12997	-	1598	21485
15.0		-	794	11045	-	1297	15590	-	2328	26298
20.0		-	1054	12754	-	1721	18013	-	3089	30385
30.0		-	1572	15620	-	2568	22062	-	4609	37213
40.0		-	2099	18037	-	3428	25475	-	6152	42970
45.0		-	2355	19131	-	3847	27020	-	6904	45577
50.0		-	2634	20166	-	4302	28481	-	7720	-
60.0		-	3175	22091	-	5186	-	-	9308	-
65.0		-	3436	22993	-	5612	-	-	10072	-
70.0		-	3723	-	-	6081	-	-	10914	-
80.0		-	4277	-	-	6985	-	-	12537	-
90.0		-	4835	-	-	7898	-	-	14174	-
100.0		-	5397	-	-	8814	-	-	15820	-
110.0		-	5931	-	-	9688	-	-	17387	-
120.0		-	6513	-	-	10637	-	-	-	-
140.0		-	7642	-	-	-	-	-	-	-
150.0		-	8184	-	-	-	-	-	-	-

***not suitable for water steam!**

Safety Valves
Type 06850, Type 06855 - O-ring

Safety Valves, angle type, stainless steel, type tested, TÜV-SV.1130. S/G/L

standard safety valve
with O-ring valve seal, "cleaned and degreased"
closed bonnet, gastight cap or lifting device
Inlet: male thread type G (BSPP) acc. to ISO 228/1
Outlet: female thread type G (BSPP) acc. to ISO 228/1

Part No. 06850.X.000002N	**Orifice**	10	14	18
Part No. 06855.X.000002N	**Pmin**	3.0 bar	3.0 bar	3.0 bar
with NBR O-ring valve seal	**Pmax**	15.9 bar	14.9 bar	19.9 bar
Part No. 06850.X.000002F	**Orifice**	10	14	18
Part No. 06855.X.000002F	**Pmin**	16.0 bar	15.0 bar	20.0 bar
with FKM O-ring valve seal	**Pmax**	250.0 bar	200.0 bar	110.0 bar

Available options - on request only:
· Flange-, NPT- or Tri-Clamp connection for in- and outlet

Applications:
Provided as safety device for protection against excessive pressure in gas cylinders and pressure vessels. Approved for gases and liquids. Working temperature: 0°C / 32°F (273K) up to 70°C / 158°F (343K), suitable for horizontal installation from 20 bar.

Materials		DIN EN	ASME/ASTM
1	Outlet body	1.4408	A 351 CF8M
2	Inlet body	1.4571	A 276 Grade 316Ti
3	Disc	1.4571	A 276 Grade 316Ti
4	O-ring	NBR or FKM	
5	Stem	1.4404	A 276 Grade 316L
6	Bonnet	1.4408	A 351 CF8M
7	Spring	1.4571	A 313 Grade 316Ti
8	Cap	1.4408	A 351 CF8M
9	Lifting cap	1.4408	A 351 CF8M
10	Lever	1.4301	A 276 Grade 304
Spare Parts			
3	Complete disc	1.4571+NBR or FKM	316Ti + NBR or FKM
4	O-ring + screw	NBR or FKM	
11	Gasket	1.4404 Graphite	316L Graphite
12	Gasket	PTFE	
13	Gasket	PTFE	
14	O-ring	FPM (VITON)	

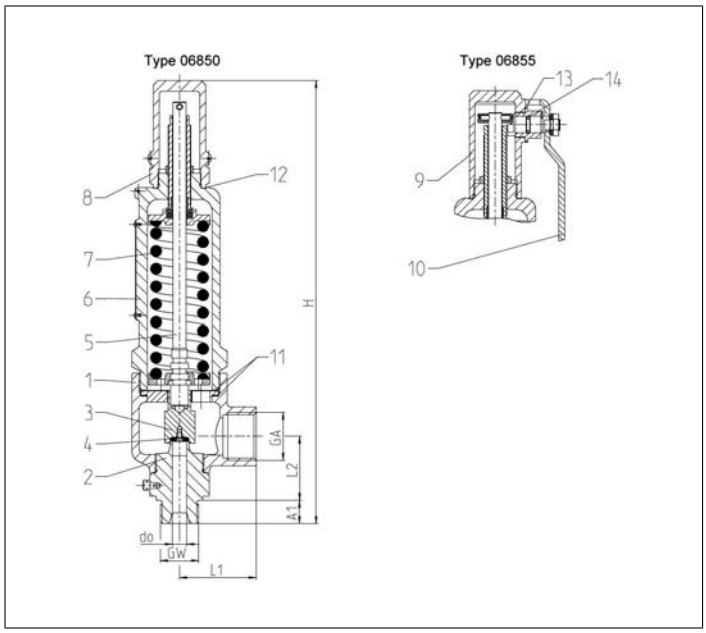

Typ 06850, 06855	Technical data									
Orifice	**[mm]**	**10**			**14**					
Inlet	GW	1/2	3/4	1	3/4	3/4	3/4	1	1	1
Outlet	GW	1	1	1	1	1-1/4	1-1/2	1	1-1/4	1-1/2
Dimension code	.X.	1024	1034	1044	1434	1435	1436	1444	1445	1446
Height	H	305.0	307.0	309.0	310.5	310.5	310.5	312.5	312.5	312.5
Length	L1	53.0	53.0	53.0	55.0	55.0	55.0	55.0	55.0	55.0
Length	L2	44.5	44.5	44.5	48.2	48.2	48.2	48.2	48.2	48.2
Length	A1	14.0	16.0	18.0	16.0	16.0	16.0	18.0	18.0	18.0
Weight 06850	ca. kg	3.2	3.2	3.2	3.4	3.4	3.4	3.4	3.4	3.4
Weight 06855	ca. kg	3.4	3.4	3.4	3.6	3.6	3.6	3.6	3.6	3.6
Coefficient of discharge	$\alpha_w S/G$	0.84	0.84	0.84	0.70	0.70	0.70	0.70	0.70	0.70
Coefficient of discharge	$\alpha_w L$	0.61	0.61	0.61	0.54	0.54	0.54	0.54	0.54	0.54
Min. set pressure	bar-g	3.0	3.0	3.0	3.0	3.0	3.0	3.0	3.0	3.0
Max. set pressure	bar-g	250.0	250.0	250.0	200.0	200.0	200.0	200.0	200.0	200.0

Dimensions in mm.

Type 06850, Type 06855 - O-ring

Type 06850, 06855	Technical data						
Orifice	**[mm]**	**18**					
Inlet	GW	1	1	1-1/4	1-1/4	1-1/2	1-1/2
Outlet	GW	1-1/2	2	1-1/2	2	1-1/2	2
Dimension code	.X.	1846	1847	1856	1857	1866	1867
Height	H	304.0	304.0	304.0	304.0	306.0	306.0
Length	L1	60.0	63.0	60.0	63.0	60.0	63.0
Length	L2	49.0	53.0	49.0	53.0	49.0	53.0
Length	A1	18.0	18.0	20.0	20.0	22.0	22.0
Weight 06850	ca. kg	3.9	4.1	3.9	4.1	4.0	4.2
Weight 06855	ca. kg	4.1	4.3	4.1	4.3	4.2	4.4
Coefficient of discharge	α_wS/G	0.76	0.76	0.76	0.76	0.76	0.76
Coefficient of discharge	α_wL	0.51	0.51	0.51	0.51	0.51	0.51
Min. set pressure	bar-g	3.0	3.0	3.0	3.0	3.0	3.0
Max. set pressure	bar-g	110.0	110.0	110.0	110.0	110.0	110.0

Dimensions in mm.

Safety Valves

Type 06850, Type 06855 - O-ring

Discharge capacities
Calculation of flow rate acc. to AD2000-Merkblatt A2 / DIN EN ISO 4126-1

Medium:
A = Saturated steam in kg/h
B = Air in m^3/h at 0°C and 1013,25 mbar
C = Water in kg/h at 20°C

The capacity indicated below is for a fully opened valve.

d_0 - orifice
A_0 - flow area

Set pressure in bar (g)	GW	1/2, 3/4 & 1			3/4 & 1			1, 1-1/4 & 1-1/2		
	d_0(mm)	10.0			14.0			18.0		
	A_0(mm^2)	78.5			153.94			254.0		
	Medium	**A**	**B**	**C**	**A**	**B**	**C**	**A**	**B**	**C**
3.0		-	194	4431	-	317	7688	-	570	12003
4.0		-	244	5117	-	398	8878	-	715	13860
5.0		-	294	5721	-	480	9926	-	862	15496
6.0		-	344	6267	-	561	10873	-	1007	16975
7.0		-	393	6769	-	642	11744	-	1153	18335
8.0		-	444	7236	-	726	12555	-	1302	19601
9.0		-	494	7675	-	807	13317	-	1448	20790
10.0		-	545	8090	-	890	14037	-	1598	21915
15.0		-	794	9908	-	1298	17192	-	2329	26840
20.0		-	1054	11441	-	1721	19851	-	3089	30992
30.0		-	1572	14012	-	2568	24313	-	4609	37958
40.0		-	2099	16180	-	3428	28074	-	6152	43830
50.0		-	2634	18090	-	4302	31388	-	7720	49003
60.0		-	3175	19817	-	5186	34384	-	9308	53680
70.0		-	3723	21404	-	6081	37138	-	10914	57981
80.0		-	4277	22882	-	6985	39703	-	12537	61985
90.0		-	4835	24270	-	7898	42111	-	14174	65745
100.0		-	5397	25583	-	8814	44389	-	15820	69301
110.0		-	5931	26832	-	9688	46555	-	17387	72684
120.0		-	6513	28025	-	10637	48626	-	-	-
140.0		-	7642	30270	-	12482	52522	-	-	-
150.0		-	8184	31333	-	13368	54365	-	-	-
160.0		-	8758	32360	-	14305	56148	-	-	-
180.0		-	9847	34323	-	16083	59554	-	-	-
200.0		-	10898	36180	-	17801	62775	-	-	-
220.0		-	11931	37946	-	-	-	-	-	-
240.0		-	12983	39633	-	-	-	-	-	-
250.0		-	13522	40451	-	-	-	-	-	-

Safety Valves

Type 55335 - Insect protection screen

Insect protection screen for safety valves
to protect the outlet from insects etc.
wire gauge 0.56mm, mesh size 2.0mm,
"cleaned and degreased for oxygen service"

Part No. 55335.X.0765

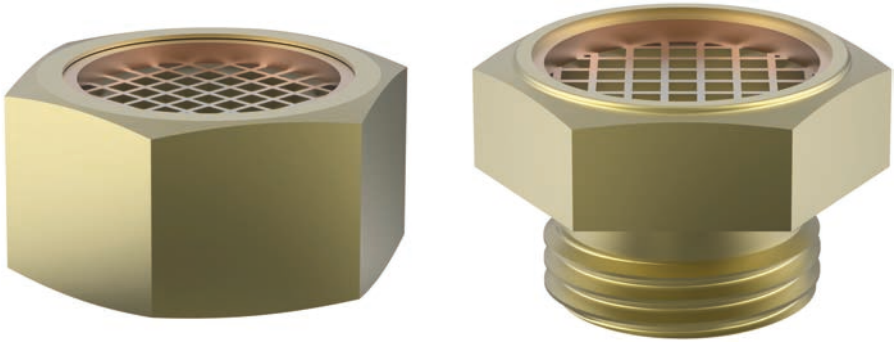

Applications:
Provided as safety device in the outlet of the safety valve against unauthorized ingression by insects, small animals or equivalent, which run a potential threat to the proper response characteristics of the valve.

Materials		DIN EN	ASME/ASTM
1	Copper ring	CW024A	C 106 C12200
2	Screen	1.4301	A 276 Grade 304
3	Union type	CW614N	B 283 UNS C38500

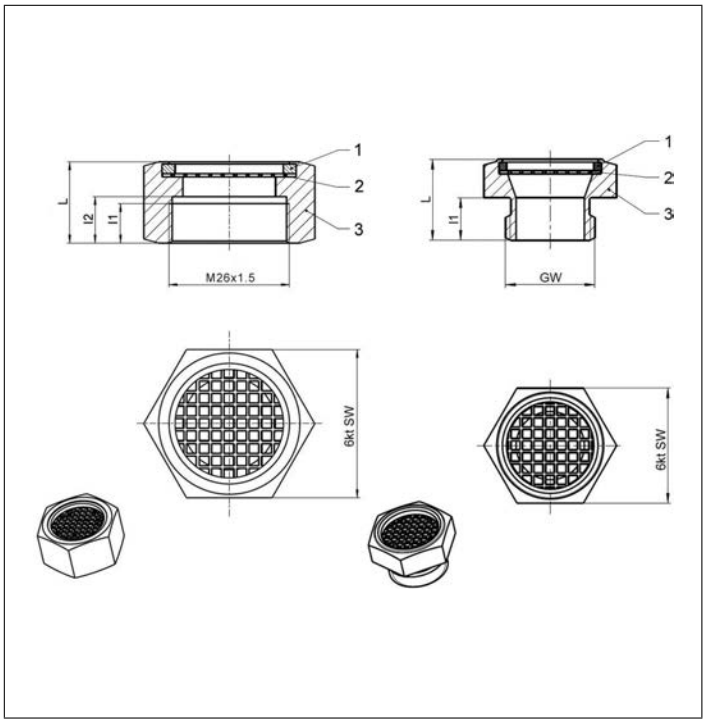

Type 55335	Technical Data							
Nominal size	**GW**	**3/8**	**3/8**	**1/2**	**1/2**	**1/2**	**1**	**26x1.5**
Thread type		**BSPP (G)**	**NPT**	**BSPT (R)**	**NPT**	**BSPP (G)**	**BSPP (G)**	**M**
Thread type		male	male	male	male	male	male	female
Dimension code	.X.	0140	0149	0150	0147	0141	0102	0148
Height	L	19.0	27.0	27.0	27.0	19.0	21.5	17.5
Length	l_1	10.0	17.0	17.0	17.0	10.0	12.0	8.5
Length	l_2	-	-	-	-	-	-	10.0
Wrench size across flats	SW	27	27	27	27	27	41	32

Abmessungen in mm.

Edition 2022-11

Safety Valves

Type 50288 - Locking sleeve connection

Clamping sleeve screw connection for safety valves, PN50
for positioning the outlet of safety valves
soft seated (flat), metal to metal seated (conical) or ball-shaped
"cleaned and degreased for oxygen service"

Part No. 50288.X.X
for part no. details please see next page

Applications:
Provided as additional device for changeover valves to position the outlet of a safety valve in a favoured direction.

Materials	DIN EN	ASME/ASTM
see next page		

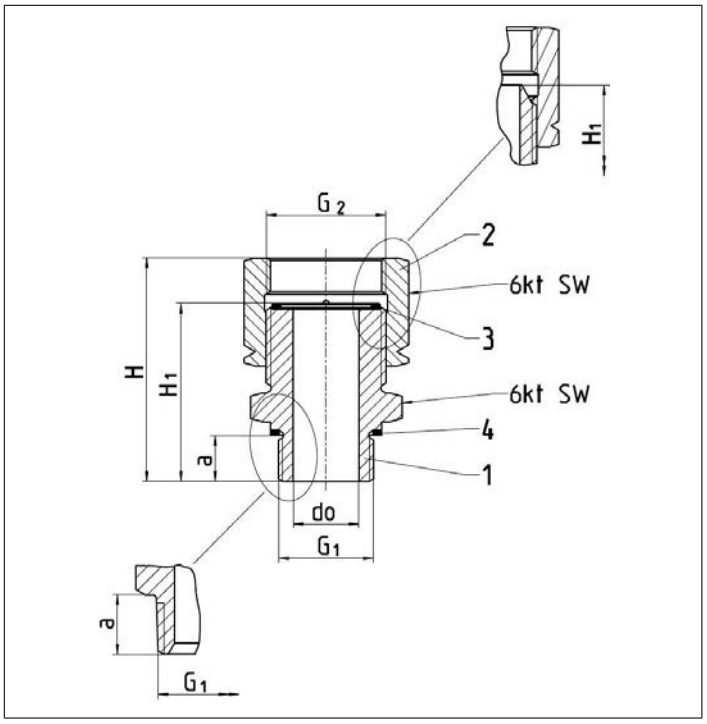

Type 50288 - Locking sleeve connection

HEROSE

Available types of the locking sleeve connection (flat)

Size inlet (G1)	Size outlet (G2)	Orifice (d_0)	Height (a)	Height (H)	Height (H1)	Wrench size across flats (SW)	Material connection (1)	Material sleeve (2)	Material Seal (3)	Material Seal (4)	Part No.
G 1/2	G 1/2	12	11.5	60	46.5	27	CW614N	CW614N	CW024A	CW024A/SF-Cu	50288.0030.0305
G 1/2	G 1/2	12	11.5	60	46.5	27	1.4301	CW614N	CW024A	CW024A/SF-Cu	50288.0030.0765
G 1/2	G 1/2	12	12	59.5	46	27	1.4301	1.4571	PCTFE	PTFE	50288.0145.0765
1/2 NPT	G 1/2	12	14	60	46.5	27	CW614N	CW614N	CW024A	N/A	50288.0054.0302
1/2 NPT	G 1/2	12	14	60	46.5	27	1.4301	CW614N	CW024A	N/A	50288.0054.0765
1/2 NPT	G 1/2	12	14	60	46.5	27	1.4301	1.4301	CW024A	N/A	50288.0060.0765
G 3/4	G 1/2	12	13.5	62	48.5	36	CW614N	CW614N	CW024A	CW024A	50288.0056.0302
R 3/4	G 1/2	12	20	65.5	52	30	1.4301	CW614N	CW024A	N/A	50288.0141.0765
R 3/4	G 1/2	16	20	65.5	52	30	1.4301	CW614N	CW024A	N/A	50288.0141.0302
G 3/4	G 3/4	16	13.5	78	59	36	CW614N	CW614N	CW024A	CW024A/SW-Cu	50288.0035.0305
G 3/4	G 3/4	16	13.5	76.5	58.5	36	CW614N/ nickel plated	CW614N	CW024A	CW024A	50288.0040.0700
G 3/4	G 3/4	16	13.5	76.5	58.5	36	1.4301	1.4571	PTFE	PTFE	50288.0038.0765
3/4 NPT	G 3/4	16	17	76.5	58.5	36	CW614N	CW614N	CW024A	N/A	50288.0005.0302
3/4 NPT	G 1	16	17	78.5	62.5	41	CW614N	CW614N	CW024A	N/A	50288.0006.0302
G 1	G 1/2	12	18	66.5	52.5	27/41	CW614N	CW614N	CW024A	CW024A	50288.0062.0302
G 1	G 3/4	16	16	80.5	62.5	41	CW614N	CW614N	CW024A	CW024A	50288.0061.0302
G 1	G 1	16	16	78.5	62.5	41	CW614N	CW614N	CW024A	CW024A	50288.0050.0302
1 NPT	G 1	16	21	78.5	62.5	41	CW614N	CW614N	CW024A	N/A	50288.0003.0305
G 1	G 1 1/4	23	16	78.5	62.5	46	CW614N	CW614N	CW024A	CW024A	50288.0047.0302
G 1 1/4	G 1 1/4	23	18	78.5	62.5	50	CW614N	CW614N	CW024A	CW024A	50288.0055.0302
G 1 1/2	G 1 1/2	23	20	82.5	66.5	55	CW614N	CW614N	CW024A	CW024A	50288.0146.0302
1 1/2 NPT	G 1 1/2	23	21	82.5	66.5	55	CW614N	CW614N	CW024A	N/A	50288.0004.0305

Available types of the locking sleeve connection (cone)

Size inlet (G1)	Size outlet (G2)	Orifice (d_0)	Height (a)	Height (H)	Height (H1)	Wrench size across flats (SW)	Material connection (1)	Material sleeve (2)	Material Seal (3)	Material Seal (4)	Part No.
G 1/2	G 1/2	13	11.5	61.5	48	27	CW614N	CW614N	N/A	CW024A/SF-Cu	50288.0001.0000
G 1/2	G 1/2	13	12	61.5	48	27	1.4571	1.4301	N/A	PTFE	50288.0049.0765
G 1/2	G 1/2	13	11.5	61.5	48	27	1.4571	CW614N	N/A	PTFE	50288.0043.0765
1/2 NPT	G 1/2	13	14	61.5	48	27	CW614N	CW614N	N/A	N/A	50288.0002.0000
1/2 NPT	G 1/2	13	14	61.5	48	27	1.4571	CW614N	N/A	N/A	50288.0002.0767
G 1/2	G 3/4	12	13	75	57	36	CW614N	CW614N	N/A	CW024A	50288.0007.0302
G 3/4	G 1/2	13	11.5	61.5	48	27/32	1.4571	CW614N	N/A	CW024A	50288.0045.0767
G 1	G 1/2	12	16	67	54	27/41	CW614N	CW614N	N/A	CW024A	50288.0072.0302

Available types of the locking sleeve connection (ball)

Size inlet (G1)	Size outlet (G2)	Orifice (d_0)	Height (a)	Height (H)	Height (H1)	Wrench size across flats (SW)	Material connection (1)	Material sleeve (2)	Material Seal (3)	Material Seal (4)	Part No.
G 1/2	G 1	12	17	82	66	41	CW614N	CW614N	N/A	CW024A	50288.0008.0302
G 1	G 1	18	16	82	66	41	CW614N	CW614N	N/A	CW024A	50288.0036.0302

Overflow Valves
Type 06386

Cryogenic Overflow Valves, angle type, bronze, PN40, not type tested
with adjusting device, metal to metal seated, closed bonnet
Inlet: male thread type G (BSPP) acc. to ISO 228/1
Outlet: female thread type G (BSPP) acc. to ISO 228/1
"cleaned and degreased for oxygen service"

Part No. 06386.X.9005 (0.5 up to 1.5 bar)
Part No. 06386.X.9003 (1.0 up to 4.0 bar)
Part No. 06386.X.9001 (3.0 up to 8.0 bar)
Part No. 06386.X.9002 (7.0 up to 17.0 bar)
Part No. 06386.X.9004 (16.0 up to 20.0 bar)
Part No. 06386.X.9007 (21.0 up to 28.0 bar)
Part No. 06386.X.9006 (28.0 up to 36.0 bar)

Available options - on request only:
· other spring ranges acc. to customer specification

Applications:
Provided as overflow valve for protection against excessive pressure in pipe systems and pressure vessels, which are not subject to approval.
Working temperature: -196°C / -321°F (77K) up to +185°C / +365°F (458K)

Materials		DIN EN	ASTM
1	Outlet body	CC491K	B 62 UNS C83600
2	Inlet body	1.4301	A 276 Grade 304
3	Disc	1.4541	A 276 Grade 321
4	Guide plate	CW453K	B 103 UNS C52100
5	Stem	CW453K	B 103 UNS C52100
6	Spring	1.4571	A 313 Grade 316Ti
7	Bonnet	1.4305	A 314 Grade 303
8	Spring clamp	CW614N	B 283 UNS C38500
9	Adjusting screw	CW614N	B 283 UNS C38500
10	Plug	CW614N	B 283 UNS C38500
11	Nut	CW614N	B 283 UNS C38500
12	Closing cap	CW614N	B 283 UNS C38500

Important: Adjusting ranges of springs are marked with a label on the bonnet.

Not to use as equipment with safety function acc. to Pressure Equipment Directive 2014/68/EU (PED) (No CE marking).

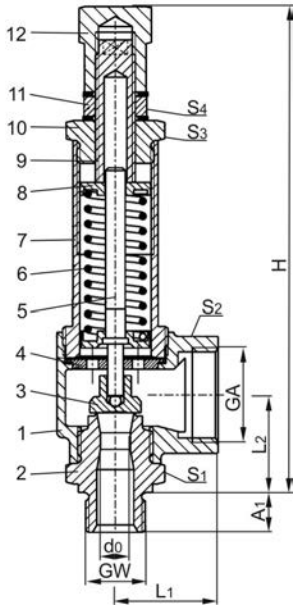

Type 06386	Technical data		
Nominal size	**GW**	**1/2**	**3/4**
Orifice	d_0	10.5	10.5
Dimension code	.X.	1004	1006
Outlet	GA	1	1
Height	H	171	171
Length	L_1	36	36
Length	L_2	34	34
Length	A_1	14	16
Wrench size across flats	S_1	30	32
Wrench size across flats	S_2	41	41
Wrench size across flats	S_3	30	30
Wrench size across flats	S_4	22	22
Weight	ca. kg	0.78	0.81

Dimensions in mm.

Overflow Valves
Type 06386

Discharge capacities
Calculation of flow rate acc. to AD2000-Merkblatt A2 / DIN EN ISO 4126-1

Medium:
Air in m^3/h at 0°C and 1013.25 mbar

The capacity indicated below is for 10% pressure increase.

d_0 - orifice
A_0 - flow area

Set pressure in bar (g)	GW	1/2 & 3/4						
	d_0(mm)	10.5						
	A_0(mm^2)	86.6						
	Medium	**Air**						
Pressure range in bar		**0.5 - 1.5**	**1.0 - 4.0**	**3.0 - 8.0**	**7.0 - 17.0**	**16.0 - 20.0**	**21.0 - 28.0**	**28.0 - 36.0**
0.5		8	-	-	-	-	-	-
1.0		11	6	-	-	-	-	-
1.5		14	9	-	-	-	-	-
2.0		-	12	-	-	-	-	-
3.0		-	21	10	-	-	-	-
4.0		-	32	25	-	-	-	-
5.0		-	-	48	-	-	-	-
6.0		-	-	76	-	-	-	-
7.0		-	-	107	82	-	-	-
8.0		-	-	144	104	-	-	-
9.0		-	-	-	128	-	-	-
10.0		-	-	-	155	-	-	-
11.0		-	-	-	177	-	-	-
12.0		-	-	-	217	-	-	-
13.0		-	-	-	248	-	-	-
14.0		-	-	-	280	-	-	-
15.0		-	-	-	319	-	-	-
16.0		-	-	-	361	186	-	-
17.0		-	-	-	409	220	-	-
18.0		-	-	-	-	263	-	-
19.0		-	-	-	-	304	-	-
20,0		-	-	-	-	339	-	-
21.0		-	-	-	-	-	227	-
22.0		-	-	-	-	-	244	-
24.0		-	-	-	-	-	278	-
25.0		-	-	-	-	-	296	-
26.0		-	-	-	-	-	314	-
28.0		-	-	-	-	-	353	431
30.0		-	-	-	-	-	-	461
32.0		-	-	-	-	-	-	491
34.0		-	-	-	-	-	-	521
35.0		-	-	-	-	-	-	536
36.0		-	-	-	-	-	-	583

GW	1/2 & 3/4
Part No. spring	**Pressure range of springs in bar**
55345.0114.1767	0.5 -1.5
55345.0263.0767	1.0 - 4.0
55345.0118.1767	3.0 - 8.0
55345.0119.1767	7.0 - 17.0
55345.0120.1767	16.0 - 20.0
55345.0233.0767	21.0 - 28.0
55345.0237.0767	28.0 - 36.0

Overflow Valves
Type 06381

Cryogenic Safety Valves, angle type, stainless steel, PN40, not type tested

metal to metal seated, closed bonnet,
Inlet: male thread type G (BSPP) acc. to ISO 228/1
Outlet: female thread type G (BSPP) acc. to ISO 228/1
" cleaned and degreased for oxygen service "

Part No. 06381.X.9005 (0.5 up to 1.5 bar)
Part No. 06381.X.9003 (1.0 up to 4.0 bar)
Part No. 06381.X.9001 (3.0 up to 8.0 bar)
Part No. 06381.X.9002 (7.0 up to 17.0 bar)
Part No. 06381.X.9004 (16.0 up to 21.0 bar)
Part No. 06381.X.9007 (21.0 up to 28.0 bar)
Part No. 06381.X.9006 (28.0 up to 36.0 bar)

Available options - on request only:
· other spring ranges acc. to customer specification

Applications:
Provided as overflow valve for protection against excessive pressure in pipe systems and pressure vessels, which are not subject to approval.
Working temperature: -196°C / -321°F (77K) up to +185°C / +365°F (458K)

Materials		DIN EN	ASTM
1	Outlet body	1.4308	A 351 CF8
2	Inlet body	1.4301	A 276 Grade 304
3	Disc	1.4541	A 276 Grade 321
4	Guide plate	1.4301	A 276 Grade 304
5	Stem	1.4571	A 276 Grade 316Ti
6	Spring	1.4571	A 313 Grade 316Ti
7	Bonnet	1.4308	A 351 CF 8
8	Spring Clamp	1.4301	A 276 Grade 304
9	Adjusting screw	1.4571	A 276 Grade 316Ti
10	Cap	1.4301	A 276 Grade 304

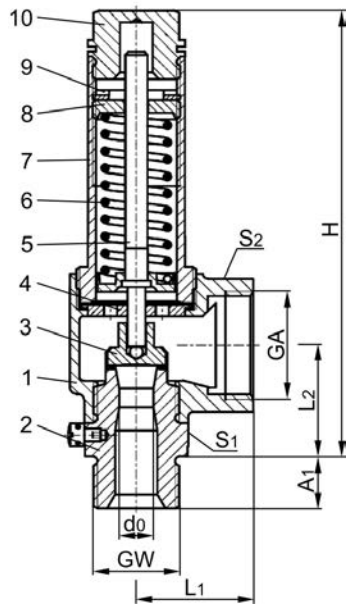

Important: Adjusting ranges of springs are marked with a label on the bonnet.

Not to use as equipment with safety function acc. to Pressure Equipment Directive 2014/68/EU (PED) (No CE marking).

Type 06381	Technical data		
Nominal size	**GW**	**1/2**	**3/4**
Orifice	d_0	10.5	10.5
Dimension code	.X.	1004	1006
Outlet	GA	1	1
Height	H	139	139
Length	L_1	36	36
Length	L_2	34	34
Length	A_1	14	16
Wrench size across flats	S_1	30	32
Wrench size across flats	S_2	41	41
Weight	ca. kg	0.77	0.79

Overflow Valves
Type 06381

Discharge capacities
Calculation of flow rate acc. to AD2000-Merkblatt A2 / DIN EN ISO 4126-1

Medium:
Air in m^3/h at 0°C and 1013.25 mbar

The capacity indicated below is for 10% pressure increase.

d_0 - orifice
A_0 - flow area

Set pressure in bar (g)	GW	1/2 & 3/4						
	d_0(mm)	10.5						
	A_0(mm^2)	86.6						
	Medium	**Air**						
Pressure range in bar		**0.5 - 1.5**	**1.0 - 4.0**	**3.0 - 8.0**	**7.0 - 17.0**	**16.0 - 21.0**	**21.0 - 28.0**	**28.0 - 36.0**
0.5		8	-	-	-	-	-	-
1.0		11	6	-	-	-	-	-
1.5		14	9	-	-	-	-	-
2.0		-	12	-	-	-	-	-
3.0		-	21	10	-	-	-	-
4.0		-	32	25	-	-	-	-
5.0		-	-	48	-	-	-	-
6.0		-	-	76	-	-	-	-
7.0		-	-	107	82	-	-	-
8.0		-	-	144	104	-	-	-
9.0		-	-	-	128	-	-	-
10.0		-	-	-	155	-	-	-
11.0		-	-	-	177	-	-	-
12.0		-	-	-	217	-	-	-
13.0		-	-	-	248	-	-	-
14.0		-	-	-	280	-	-	-
15.0		-	-	-	319	-	-	-
16.0		-	-	-	361	186	-	-
17.0		-	-	-	409	220	-	-
18.0		-	-	-	-	263	-	-
19.0		-	-	-	-	304	-	-
20,0		-	-	-	-	339	-	-
21.0		-	-	-	-	383	227	-
22.0		-	-	-	-	-	244	-
24.0		-	-	-	-	-	278	-
25.0		-	-	-	-	-	296	-
26.0		-	-	-	-	-	314	-
28.0		-	-	-	-	-	353	431
30.0		-	-	-	-	-	-	461
32.0		-	-	-	-	-	-	491
34.0		-	-	-	-	-	-	521
35.0		-	-	-	-	-	-	536
36.0		-	-	-	-	-	-	583

GW	1/2 & 3/4
Part No. spring	**Pressure range of springs in bar**
55345.0114.1767	0.5 -1.5
55345.0263.0767	1.0 - 4.0
55345.0118.1767	3.0 - 8.0
55345.0119.1767	7.0 - 17.0
55345.0120.1767	16.0 - 21.0
55345.0233.0767	21.0 - 28.0
55345.0237.0767	28.0 - 36.0

Overflow Valves
Type 06001

Cryogenic Overflow Valves, angle type, bronze with elbow and silencer for noise reduction, PN40, not type tested

with adjusting device,
with carbon filled PTFE valve seal
Inlet: male thread type G (BSPP) acc. to ISO 228/1
"cleaned and degreased for oxygen service"

Part No. 06001.0400.9001 (11.0 up to 16.0 bar)
Part No. 06001.0400.9002 (16.0 up to 21.0 bar)
Part No. 06001.0400.9003 (22.0 up to 28.0 bar)
Part No. 06001.0400.9004 (28.0 up to 36.0 bar)

Available options - on request only:
· other spring ranges acc. to customer specification

Applications:
Provided as overflow valve for protection against excessive pressure in pipe systems and pressure vessels, which are not subject to approval.
Working temperature: -196°C / -321°F (77K) up to +65°C / +149°F (338K)

Materials		DIN EN	ASTM
1	Body	CW610N	B 283 UNS C36500
2	Disc	PTFE / Carbon filled (25%)	
3	Guide plate	CW614N	B 283 UNS C38500
4	Copper ring	Copper	Copper
5	Stem	CW614N	B 283 UNS C38500
6	Bonnet	CW614N	B 283 UNS C38500
7	Spring	1.4571	A 313 Grade 316Ti
8	Cap	CW614N	B 283 UNS C38500
9	Ring	FKM/V4A	
10	Nut	CW614N	B 283 UNS C38500
11	Adjusting screw	CW614N	B 283 UNS C38500
12	Closing cap	CW614N	B 283 UNS C38500
13	Elbow	CW614N	B 283 UNS C38500
14	Silencer	CC483K	B 30 UNS C90800

Important: Adjusting ranges of springs are marked with a label on the bonnet.

Not to use as equipment with safety function acc. to Pressure Equipment Directive 2014/68/EU (PED) (No CE marking).

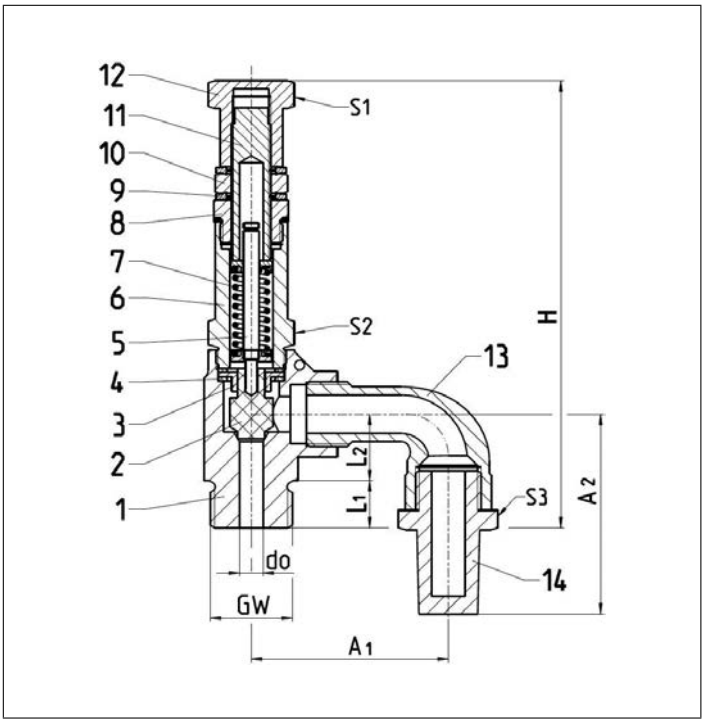

Type 06001	Technical data	
Nominal size	**GW**	**1/2**
Orifice	d_0	6.0
Dimension code	.X.	0400
Height	H	103
Length	L_1	12
Length	L_2	17
Length	A_1	51
Wrench size across flats	S_1	19
Wrench size across flats	S_2	19
Wrench size across flats	S_3	22
Weight	ca. kg	0.39

Dimensions in mm.

Overflow Valves
Type 06001

Discharge capacities
Calculation of flow rate acc. to AD2000-Merkblatt A2 / DIN EN ISO 4126-1

Medium:
Air in m^3/h at 0°C and 1013.25 mbar

The capacity indicated below is for 10% pressure increase.

d_0 - orifice
A_0 - flow area

Set pressure in bar (g)	GW	1/2			
	d_0(mm)	6.0			
	A_0(mm^2)	28.3			
	Medium	**Air**			
Pressure range in bar		**11.0 - 16.0**	**16.0 - 21.0**	**21.0 - 28.0**	**28.0 - 36.0**
11.0		23	-	-	-
12.0		25	-	-	-
13.0		27	-	-	-
14.0		32	-	-	-
15.0		30	-	-	-
16.0		26	20	-	-
17.0		-	34	-	-
18.0		-	29	-	-
19.0		-	24	-	-
20.0		-	32	-	-
21.0		-	30	30	-
22.0		-	-	47	-
23.0		-	-	40	-
24.0		-	-	41	-
25.0		-	-	50	-
26.0		-	-	45	-
27.0		-	-	66	-
28.0		-	-	44	52
29.0		-	-	-	46
30.0		-	-	-	43
31.0		-	-	-	49
32.0		-	-	-	60
33.0		-	-	-	57
34.0		-	-	-	54
35.0		-	-	-	74
36.0		-	-	-	62

Changeover Valves
Type 06510 - Diverter Valve

Cryogenic Diverter Valves, bronze, PN50
for the installation of two safety valves,
provided for bursting disc connections,
"cleaned and degreased for oxygen service"

Part No. 06510.X.0000
Female thread connection (G) acc. to ISO 228/1

Part No. 06510.X.6***
Female thread connection NPT acc. to ANSI B 1.20.1

Available Options - on request only:
· Two extra test connections 1/4" edgeways
· Inlet: female thread (GW) 3/4"
· Outlet GA_1 with installed locking sleeve for easy positioning of safety valves
· Combination of different outlet threads GA_1 - GA_2
· Safety lock (Part No. 55394.0043.0765)

Applications:
Approved for air gases, vapours and cryogenic liquefied gases incl. LNG.
Working temperature: -196°C / -321°F (77K) up to +120°C / +248°F (393K)

Materials		DIN EN	ASTM
1	Body I	CC491K	B 62 UNS C83600
2	Body II	CC491K	B 62 UNS C83600
3	Ball	1.4571	A 276 Grade 316Ti
4	Seat rings	PCTFE	
5	Bush	CW614N	B 283 UNS C38500
6	Spring plates	1.4571	A 313 Grade 316Ti
7	Spring clamp	CW614N	B 283 UNS C38500
8	Thread ring	CW614N	B 283 UNS C38500
9	Plug	CW614N	B 283 UNS C38500
10	Stem	1.4301	A 276 Grade 304
11	Gland packing	Graphite / PTFE	
12	Lever	CC491K	B 62 UNS C83600

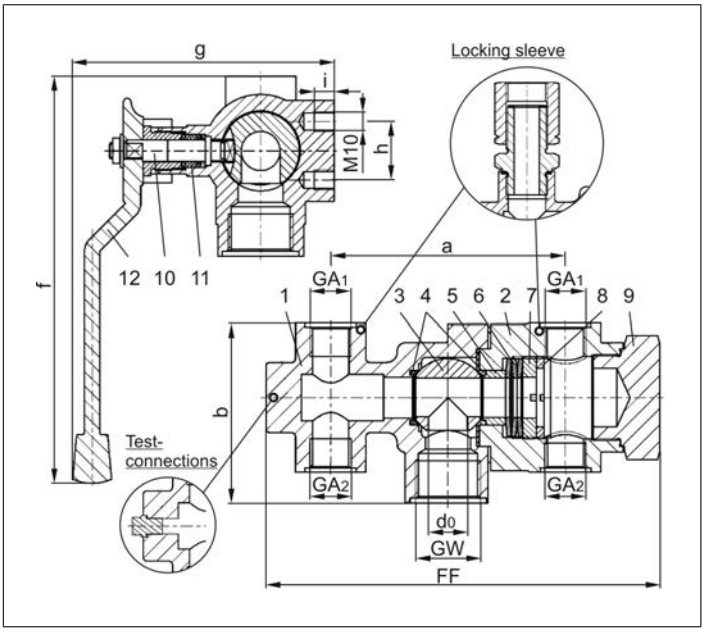

Type 06510 - Standard design	Technical Data		
Nominal Size	**DN**	**20**	**20**
Dimension code	.X.	2004	2006
Flow diameter	d_0	20	20
Inlet	GW	1	1
Outlet	GA_1	1/2	3/4
Outlet	GA_2	1/2	1/2
Face-to-face dimension	FF	201	201
Length	a	120	120
Height	b	92	92
Length	f	208	208
Length	g	134	134
Length	h	30	30
Thread depth	i	10	10
Weight	ca. kg	4.8	4.7
Kvs - Value, one side open	m^3/h	7.7	7.7
Cv - Value, one side open	gal /min	9.2	9.2

Dimensions in mm.

Important:
The valves must be fixed at the provided threads M10.

Changeover Valves
Type 06510 - Diverter Valve

Cryogenic Diverter Valves, bronze, PN50
for the installation of two safety valves,
provided for bursting disc connections,
"cleaned and degreased for oxygen service"

Part No. 06510.X.0008
Inlet: union type braze fitting for pipe outside diameter 26.9mm
Outlet: female thread connection (G) acc. to ISO 228/1

Part No. 06510.X.000*
Inlet: union type butt weld fitting, when order please indicate pipe diameter
Outlet: female thread connection (G) acc. to ISO 228/1

Part No. 06510.X.6026
Inlet: union type butt weld fitting for pipe 33.4mm S10
Outlet: female thread connection NPT acc. to ANSI B 1.20.1

Available options - on request only:
· Two extra test connections 1/4" edgeways
· Inlet: union type braze or butt weld fitting for other pipe diameter
· Outlet GA_1 with installed locking sleeve for easy positioning of safety valves
· Combination of different outlet threads GA_1 - GA_2
· Safety lock (Part No. 55394.0043.0765)

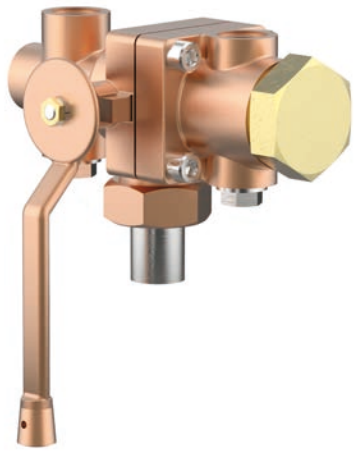

Applications:
Approved for air gases, vapours and cryogenic liquefied gases incl. LNG.
Working temperature: -196°C / -321°F (77K) up to +120°C / +248°F (393K)

Materials		DIN EN	ASTM
1	Body I	CC491K	B 62 UNS C83600
2	Body II	CC491K	B 62 UNS C83600
3	Ball	1.4571	A 276 Grade 316Ti
4	Seat rings	PCTFE	
5	Bush	CW614N	B 283 UNS C38500
6	Spring plates	1.4571	A 313 Grade 316Ti
7	Spring clamp	CW614N	B 283 UNS C38500
8	Thread ring	CW614N	B 283 UNS C38500
9	Plug	CW614N	B 283 UNS C38500
10	Stem	1.4301	A 276 Grade 304
11	Gland packing	Graphit / PTFE	
12	Lever	CC491K	B 62 UNS C83600
13	Braze fitting	CC493K	B 505 UNS C93200
13a	Weld fitting	1.4301	A 276 Grade 304
14	Union nut	CC493K	B 505 UNS C93200

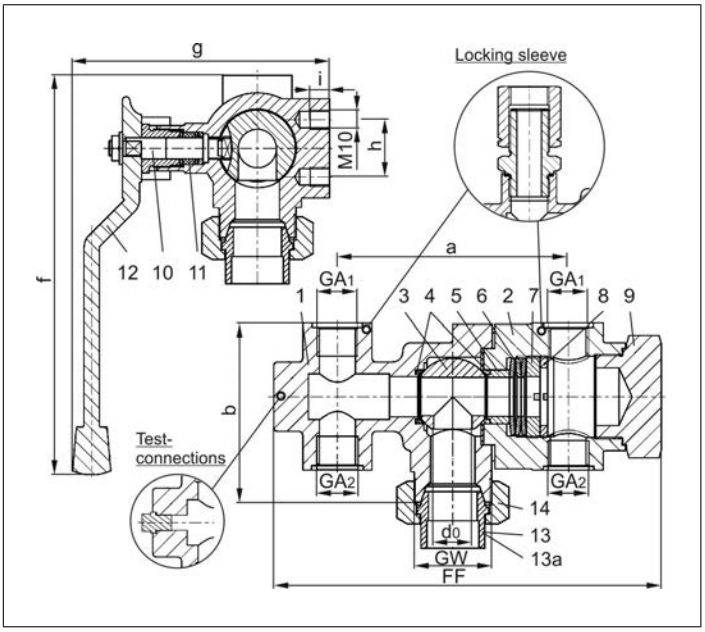

Type 06510 - Standard design	Technical data		
Nominal size	**DN**	**20**	**20**
Dimension code	.X.	2040	2060
Flow diameter	d_0	20	20
Inlet	GW	M40x2	M40x2
Outlet	GA_1	1/2	3/4
Outlet	GA_2	1/2	1/2
Face-to-face dimension	FF	201	201
Length	a	120	120
Height	b	92	92
Length	f	208	208
Length	g	134	134
Length	h	30	30
Thread depth	i	10	10
Wrench size across flats	S_1	50	50
Weight	ca. kg	5.1	5.0
Kvs - Value, one side open	m^3/h	7.7	7.7
Cv - Value, one side open	gal /min	9.2	9.2

Important:
The valves must be fixed at the provided threads M10.

Dimensions in mm.

Edition 2022-11

Changeover Valves
Type 06510 - Diverter Valve

Cryogenic Diverter Valves, bronze, PN50
for the installation of two safety valves,
provided for bursting disc connections,
"cleaned and degreased for oxygen service"

3212/3214 **3210**

Part No. 06510.X.0120
Female thread connection (G) acc. to ISO 228/1

Part No. 06510.X.6000
Female thread connection NPT acc. to ANSI B 1.20.1

Available Options - on request only:
· Inlet with union type braze or butt weld fitting
· Two extra test connections 1/4" edgeways
· Outlet GA_1 with installed locking sleeve for easy positioning of safety valves
· Combination of different outlet threads GA_1 - GA_2
· **Safety lock (Part No. 55394.0049.0765)**

Applications:
Approved for air gases, vapours and cryogenic liquefied gases incl. LNG.
Working temperature: -196°C / -321°F (77K) up to +120°C / +248°F (393K)

Materials		DIN EN	ASTM
1	Body I	CC491K	B 62 UNS C83600
2	Body II	CC491K	B 62 UNS C83600
3	Ball	1.4571	A 276 Grade 316Ti
4	Seat rings	PCTFE	
5	Bush	CW614N	B 283 UNS C38500
6	Spring plates	1.4571	A 313 Grade 316Ti
7	Spring clamp	CW614N	B 283 UNS C38500
8	Thread ring	CW614N	B 283 UNS C38500
10	Stem	1.4301	A 276 Grade 304
11	Gland packing	Graphit / PTFE	
12	Lever	CC491K	B 62 UNS C83600

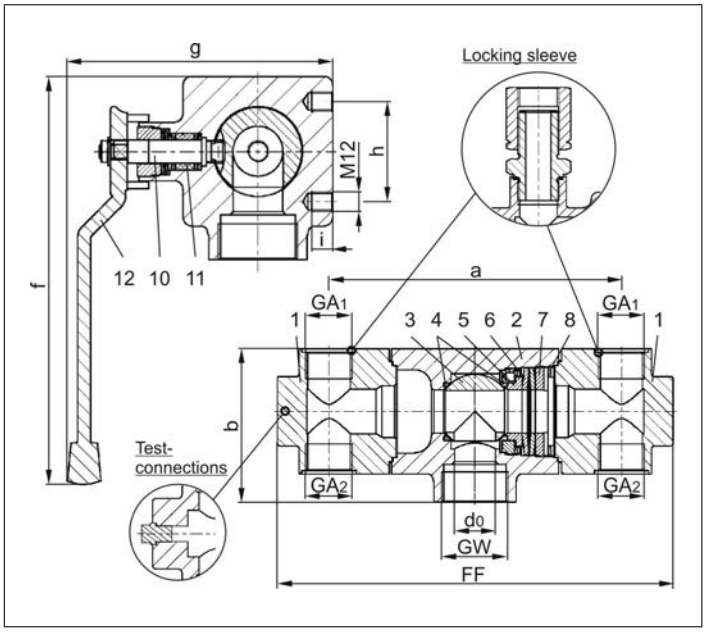

Type 06510 - Standard design	Technical data			
Nominal size	**DN**	**32**	**32**	**32**
Dimension code	.X.	3210	3212	3214
Flow diameter	d_0	30	30	30
Inlet	GW	1-1/2	1-1/2	1-1/2
Outlet	GA_1	1	1-1/4	1-1/2
Outlet	GA_2	1	1-1/4	1-1/2
Face-to-face dimension	FF	300	284	284
Length	a	210	210	210
Height	b	110	145	145
Length	f	245	245	245
Length	g	160	160	160
Length	h	60	60	60
Thread depth	i	12.5	12.5	12.5
Weight	ca. kg	12.2	13.5	13.5
Kvs - Value, one side open	m^3/h	13.5	13.5	13.5
Cv - Value, one side open	gal /min	15.7	15.7	15.7
Kvs - Value, both sides open	m^3/h	25.0	25.0	25.0
Cv - Value, both sides open	gal /min	29.0	29.0	29.0

Important:
The valves must be fixed at the provided threads M12.

Dimensions in mm.

Edition 2022-11

Phone: +49 4531 509-0

Changeover Valves
Type 06512 - Diverter Valve

Cryogenic Diverter Valves, bronze, PN50
for the installation of four safety valves,
provided for bursting disc connections,
"cleaned and degreased for oxygen service"

Part No. 06512.X.0000
Female thread connection (G) acc. to ISO 228/1

Part No. 06512.X.6000
Female thread connection NPT acc. to ANSI B 1.20.1

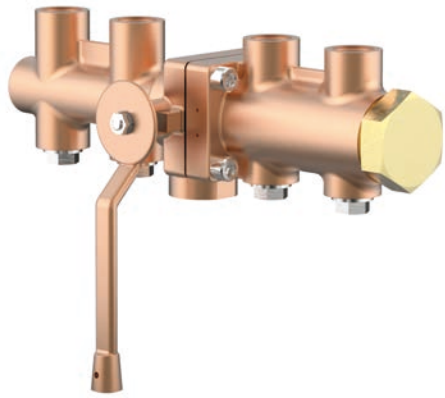

Available Options - on request only:
· Inlet with union type braze or butt weld fitting
· Two extra test connections 1/4" edgeways
· Inlet: female thread (GW) 1/2" or 3/4"
· Outlet GA_1 with installed locking sleeve for easy positioning of safety valves
· Combination of different outlet threads GA_1 - GA_2
· **Safety lock (Part No. 55394.0043.0765)**

Applications:
Approved for air gases, vapours and cryogenic liquefied gases incl. LNG.
Working temperature: -196°C / -321°F (77K) up to +120°C / +248°F (393K)

Materials		DIN EN	ASTM
1	Body I	CC491K	B 62 UNS C83600
2	Body II	CC491K	B 62 UNS C83600
3	Ball	1.4571	A 276 Grade 316Ti
4	Seat rings	PCTFE	
5	Bush	CW614N	B 283 UNS C38500
6	Spring plates	1.4571	A 313 Grade 316Ti
7	Spring clamp	CW614N	B 283 UNS C38500
8	Thread ring	CW614N	B 283 UNS C38500
9	Plug	CW614N	B 283 UNS C38500
10	Stem	1.4301	A 276 Grade 304
11	Gland packing	Graphit / PTFE	
12	Lever	CC491K	B 62 UNS C83600

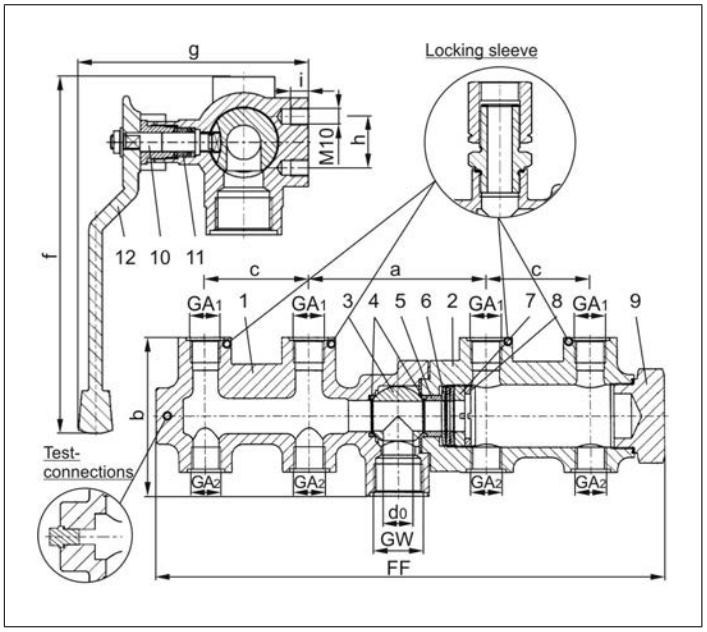

Type 06512 - Standard design	Technical data		
Nominal size	**DN**	**20**	**20**
Dimension code	.X.	2004	2006
Flow diameter	d_0	20	20
Inlet	GW	1	1
Outlet	GA_1	1/2	3/4
Outlet	GA_2	1/2	1/2
Face-to-face dimension	FF	345	345
Length	a	120	120
Height	b	107	107
Length	c	70	70
Length	f	223	223
Length	g	134	134
Length	h	30	30
Thread depth	i	10	10
Weight	ca. kg	7.2	7.1
Kvs - Value, one side open	m^3/h	7.7	7.7
Cv - Value, one side open	gal /min	9.2	9.2

Dimensions in mm.

Important:
The valves must be fixed at the provided threads M10.

Edition 2022-11

Changeover Valves
Type 06520 - Diverter Valve

Cryogenic Diverter Valves, stainless steel, inner parts made of brass, PN50
for the installation of two safety valves,
provided for bursting disc connections,
"cleaned and degreased for oxygen service"

Part No. 06520.X.0000
Female thread connection (G) acc. to ISO 228/1

Part No. 06520.X.6***
Female thread connection NPT acc. to ANSI B 1.20.1

Available Options - on request only:
· Two extra test connections 1/4" edgeways
· Inlet: female thread (GW) 3/4"
· Outlet GA_1 with installed locking sleeve for easy positioning of safety valves
· Combination of different outlet threads GA_1 - GA_2
· **Safety lock (Part No. 55394.0043.0765)**

Applications:
Approved for air gases, vapours and cryogenic liquefied gases incl. LNG.
Working temperature: -196°C / -321°F (77K) up to +120°C / +248°F (393K)

Materials		DIN EN	ASTM
1	Body I	1.4308	A 351 CF8
2	Body II	1.4308	A 351 CF8
3	Ball	1.4571	A 276 Grade 316Ti
4	Seat rings	PCTFE	
5	Bush	CW614N	B 283 UNS C38500
6	Spring plates	1.4571	A 313 Grade 316Ti
7	Spring clamp	CW614N	B 283 UNS C38500
8	Thread ring	CW614N	B 283 UNS C38500
9	Plug	1.4408	A 351 CF8M
10	Stem	1.4301	A 276 Grade 304
11	Gland packing	Graphite / PTFE	
12	Lever	1.4308	A 351 CF8

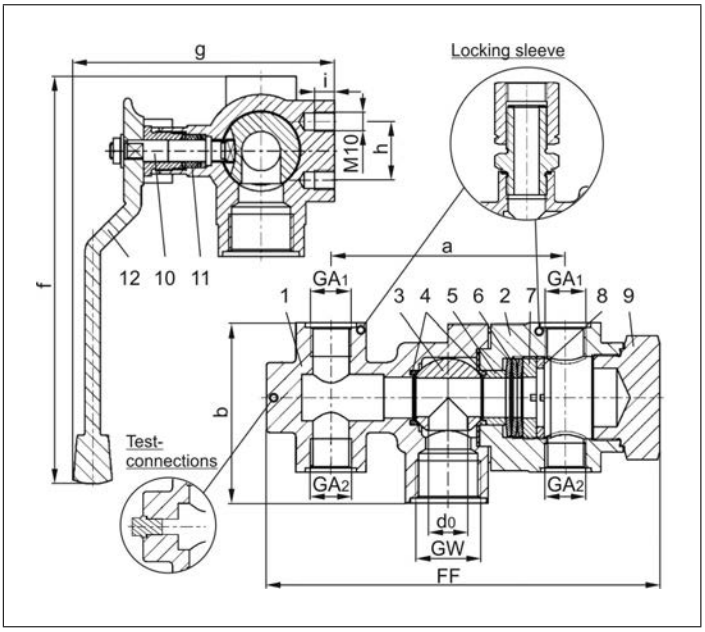

Type 06520 - Standard design	Technical Data		
Nominal Size	**DN**	**20**	**20**
Dimension code	.X.	2004	2006
Flow diameter	d_0	20	20
Inlet	GW	1	1
Outlet	GA_1	1/2	3/4
Outlet	GA_2	1/2	1/2
Face-to-face dimension	FF	201	201
Length	a	120	120
Height	b	92	92
Length	f	208	208
Length	g	134	134
Length	h	30	30
Thread depth	i	10	10
Weight	ca. kg	4.8	4.7
Kvs - Value, one side open	m^3/h	7.7	7.7
Cv - Value, one side open	gal /min	9.2	9.2

Dimensions in mm.

Important:
The valves must be fixed at the provided threads M10.

Changeover Valves
Type 06530 - Diverter Valve

Cryogenic Diverter Valves, stainless steel, PN50
for the installation of two safety valves,
provided for bursting disc connections,
"cleaned and degreased for oxygen service"

Part No. 06530.X.0000
Female thread connection (G) acc. to ISO 228/1

Part No. 06530.X.6***
Female thread connection NPT acc. to ANSI B 1.20.1

Available Options - on request only:
· Two extra test connections 1/4" edgeways
· Inlet: female thread (GW) 3/4"
· Outlet GA_1 with installed locking sleeve for easy positioning of safety valves
· Combination of different outlet threads GA_1 - GA_2
· **Safety lock (Part No. 55394.0043.0765)**

Applications:
Approved for air gases, vapours and cryogenic liquefied gases incl. LNG.
Working temperature: -196°C / -321°F (77K) up to +120°C / +248°F (393K)

Materials		DIN EN	ASTM
1	Body I	1.4308	A 351 CF8
2	Body II	1.4308	A 351 CF8
3	Ball	1.4571	A 276 Grade 316Ti
4	Seat rings	PCTFE	
5	Bush	1.4301	A 276 Grade 304
6	Spring plates	1.4571	A 313 Grade 316Ti
7	Spring clamp	1.4571	A 276 Grade 316Ti
8	Thread ring	1.4571	A 276 Grade 316Ti
9	Plug	1.4408	A 351 CF8M
10	Stem	1.4301	A 276 Grade 304
11	Gland packing	Graphite / PTFE	
12	Lever	1.4308	A 351 CF8

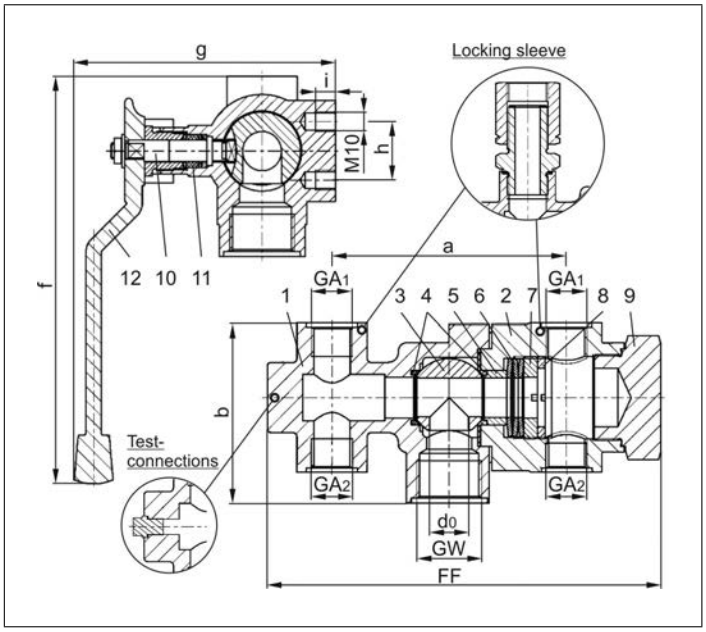

Type 06530 - Standard design	Technical Data		
Nominal Size	**DN**	**20**	**20**
Dimension code	.X.	2004	2006
Flow diameter	d_0	20	20
Inlet	GW	1	1
Outlet	GA_1	1/2	3/4
Outlet	GA_2	1/2	1/2
Face-to-face dimension	FF	201	201
Length	a	120	120
Height	b	92	92
Length	f	208	208
Length	g	134	134
Length	h	30	30
Thread depth	i	10	10
Weight	ca. kg	4.8	4.7
Kvs - Value, one side open	m^3/h	7.7	7.7
Cv - Value, one side open	gal /min	9.2	9.2

Dimensions in mm.

Important:
The valves must be fixed at the provided threads M10.

Edition 2022-11

Changeover Valves
Type 7111 - Diverter-Plug-Valve

Cryogenic Diverter Plug Valves, bronze, PN50
for the installation of two safety valves,
provided for bursting disc connections,
"cleaned and degreased for oxygen service"

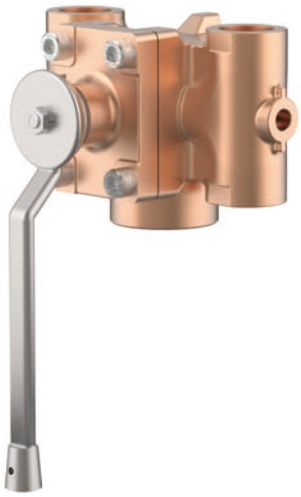

Part No. 7111.X
Female thread connection (G) acc. to ISO 228/1 or
Female thread connection NPT acc. to ANSI B 1.20.1

Available Options - on request only:
· Inlet with union type braze or butt weld fitting
· Combination of different outlet threads GA_1 - GA_2 - GA_3

Applications:
Approved for air gases, vapours and cryogenic liquefied gases incl. LNG.
Working temperature: -196°C / -321°F (77K) up to +120°C / +248°F (393K)
For O_2-applications: Up to 60°C / 140°F (333K): maximum oxygen pressure up to 40 bar
From 60°C / 140°F (333K): maximum oxygen pressure up to 25 bar

Materials		DIN EN	ASTM
1	Body	CC491K	C83600
2	Seal	PTFE	
3	Pin	1.4301	304
4	Cock plug	CW614N	C38500
5	Upper part	CC491K	C83600
6	Stem	1.4301	304
7	Seal	PTFE	
8	Gland packing	Graphite / PTFE	
9	Disc spring	1.4310	301
10	STB screw	CW614N	C38500
11	Screw	1.4301	304
12	Lever	1.4308	CF8
13	Disc spring	1.4568	631
14	Spring	Cu	C11000

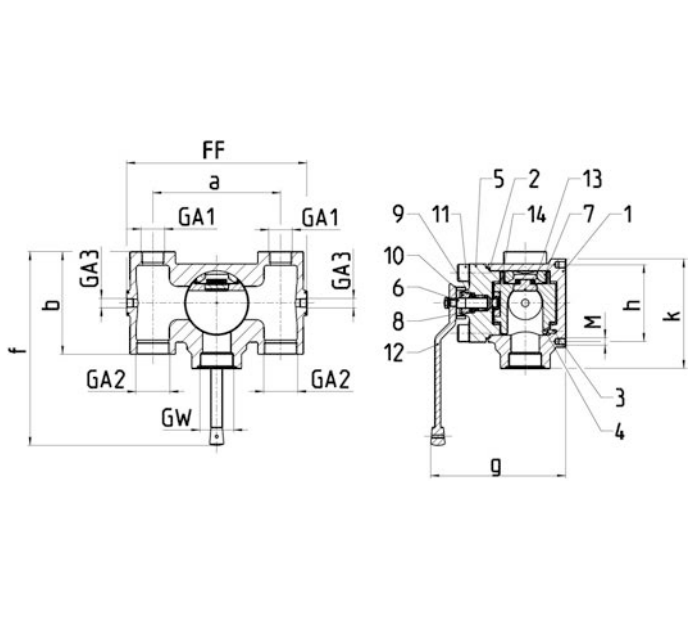

Type 7111 - Standard design	Technical Data						
Nominal Size	**DN**	**32**	**32**	**32**	**32**	**32**	**32**
Dimension code	.X.	FN14000. D3001	FN12000. D3002	FN10000. D3003	FG14000. D3005	FG12000. D3006	FG10000. D3007
Inlet	GW	1-1/2 NPT	1-1/4 NPT	1 NPT	1-1/2 G	1-1/4 G	1 G
Outlet	GA_1	1	3/4	1/2	1	3/4	1/2
Outlet	GA_2	1	3/4	1/2	1	3/4	1/2
Test connection	GA_3	1/4	1/4	1/4	1/4	1/4	1/4
Face-to-face dimension	FF	180	180	180	180	180	180
Length	a	125	125	125	125	125	125
Height	b	94	94	94	94	94	94
Length	f	247	247	247	247	247	247
Length	g	154	154	154	154	154	154
Length	h	82	82	82	82	82	82
Length	k	113	113	113	113	113	113
Weight	ca. kg	5.6	5.6	5.6	5.6	5.6	5.6
Kvs - Value, one side open	m^3/h	22.8	16.0	10.0	22.8	16.0	10.0
Cv - Value, one side open	gal /min	26.5	18.6	11.6	26.5	18.6	11.6
Kvs - Value, both sides open	m^3/h	43.7	33.0	20.0	43.7	33.0	20.0
Cv - Value, both sides open	gal /min	50.8	38.4	23.3	50.8	38.4	23.3

Dimensions in mm.

Changeover Valves
Type 7111 - Diverter-Plug-Valve

Type 7111 - Standard design	Technical Data				
Nominal Size	**DN**	**50**	**50**	**50**	**50**
Dimension code	.X.	FN14000. D5001	FN20000. D5004	FG14000. D5005	FG20000. D5008
Inlet	GW	1-1/2 NPT	2 NPT	1-1/2 G	2 G
Outlet	GA_1	1	1-1/2	1	1-1/2
Outlet	GA_2	1	1-1/2	1	1-1/2
Test connection	GA_3	1/4	1/4	1/4	1/4
Face-to-face dimension	FF	254	254	254	254
Length	a	180	180	180	180
Height	b	144	144	144	144
Length	f	272	272	272	272
Length	g	190	190	190	190
Length	h	108	108	108	108
Length	k	124	124	124	124
Weight	ca. kg	16.9	16.9	16.9	16.9
Kvs - Value, one side open	m^3/h	25.3	49.5	25.3	49.5
Cv - Value, one side open	gal /min	29.3	57.4	29.3	57.4
Kvs - Value, both sides open	m^3/h	47.0	114.0	47.0	114.0
Cv - Value, both sides open	gal /min	54.5	132.2	54.5	132.2

Dimensions in mm.

Spare Parts Diverter-Plug-Valve:

Spare Part Kit Cock Plug Seal DN32
Part No. 30003.0002.0000

Spare Part Kit Cock Plug Seal DN50
Part No. 30003.0002.0001

Spare Part Kit Gland Packing DN32/DN50
Part No. 30003.0001.0000

Changeover Valves

Type 06405 - Changeover Valve

Cryogenic Changeover Valves, brass
for the installation of two safety valves,
with indicator and two test connections G 1/4,
"cleaned and degreased for oxygen service"

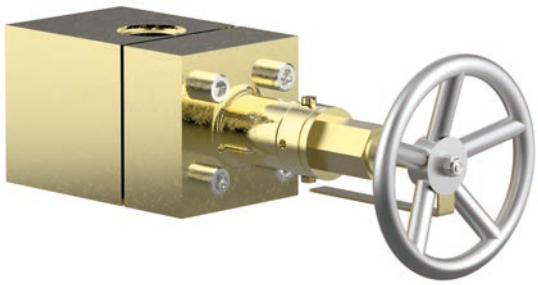

Part No. 06405.0150.0000, DN15, PN40, metal to metal seated
Female thread connection (G) acc. to ISO 228/1

Part No. 06405.0150.6000, DN15, PN40, metal to metal seated
Female thread connection NPT acc. to ANSI B 1.20.1

Part No. 06405.0250.0000, DN25, PN45, PTFE valve seal
Female thread connection (G) acc. to ISO 228/1

Part No. 06405.0250.6000, DN25, PN45, PTFE valve seal
Female thread connection NPT acc. to ANSI B 1.20.1

Available options - on request only:
· Valve with bursting disc connections
· Outlet: GA with installed locking sleeve for easy positioning of safety valves
· Outlet: GA with thread 3/4"

Applications:
Approved for air gases, vapours and cryogenic liquefied gases incl. LNG.
Working temperature: -196°C / -321°F (77K) up to +185°C / +365°F (458K)

Materials		DIN EN	ASTM
1	Body I	CW614N	B 283 UNS C38500
2	Gasket	CW024A	C12200
3	Disc	1.4301	A 276 Grade 304
4	Valve seal DN25	PTFE	
5	Body II	CW614N	B 283 UNS C38500
6	Stem	1.4301	A 276 Grade 304
7	Gland packing	Graphite / PTFE	
8	Top ring	CW614N	B 283 UNS C38500
9	Gland nut DN15	CW710R	no reference
9	Gland nut DN25	CW614N	B 283 UNS C38500
10	Handwheel	Aluminium alloy	

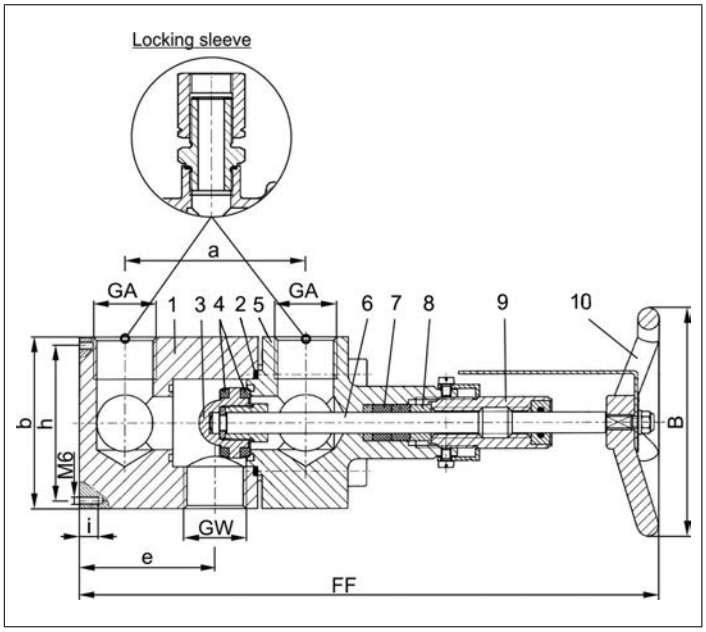

Type 06405 - Standard design	Technical data		
Nominal size	**DN**	**15**	**25**
Dimension code	.X.	0150	0250
Inlet	GW	3/4	1
Outlet	GA	1/2	1
Face-to-face dimension	FF	240	310
Length	a	80	96
Length	b	65	90
Length	e	50	72
Length	h	55	80
Thread depth	i	12	12
Handwheel-Ø	B	100	120
Weight	ca. kg	4.1	9.5
Kvs - Value, one side open	m^3/h	6.0	14.0
Cv - Value, one side open	gal /min	6.9	16.1
Kvs - Value, central position	m^3/h	13.0	25.0
Cv - Value, central position	gal /min	15.0	28.9

Dimensions in mm.

Important:
The valves must be fixed at the provided threads M6.

Changeover Valves

Type 06401 - Changeover Valve DN15

Cryogenic Changeover Valves, stainless steel, PN125
for the installation of two safety valves,
with two test connections G 1/4,
"cleaned and degreased for oxygen service"

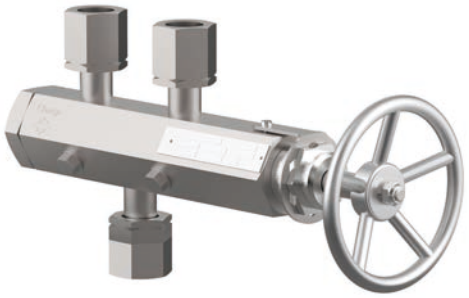

Part No. 06401.0150.0000
In- and Outlet: locking sleeve G 3/4

Part No. 06401.0150.9***
*** Changeover valves with other threads for vessel or safety valve connection on request

Available options - on request only:
· Changeover valves with pneumatic or electric actuator
· Inlet GW and/or outlet GA with female thread (G) acc. to ISO 228/1
· Inlet GW and/or outlet GA with female thread NPT acc. to ANSI B 1.20.1
· Combination of different thread connections GW - GA

Applications:
Approved for air gases, vapours and cryogenic liquefied gases incl. LNG.
Working temperature: -196°C / -321°F (77K) up to +185°C / +365°F (458K)

Materials		DIN EN	ASTM
1	Body	1.4571	A 276 Grade 316Ti
2	Plug	1.4571	A 276 Grade 316Ti
3	Disc stem	1.4571	A 276 Grade 316Ti
4	Valve seal	PTFE / Carbon filled (25%)	
5	Disc	1.4571	A 276 Grade 316Ti
6	Disc nut	1.4301/A2	A 194 B8
7	Gland packing	PTFE / Carbon filled (25%)	
8	Head piece	CW452K nickel plated	B 159 UNS C51900 nickel plated
9	Stem	1.4571	A 276 Grade 316Ti
10	Handwheel	Aluminium alloy	
11	Welding piece	1.4571	A 276 Grade 316Ti
12	Locking sleeve	1.4571	A 276 Grade 316Ti
13	Thread connection	1.4571	A 276 Grade 316Ti

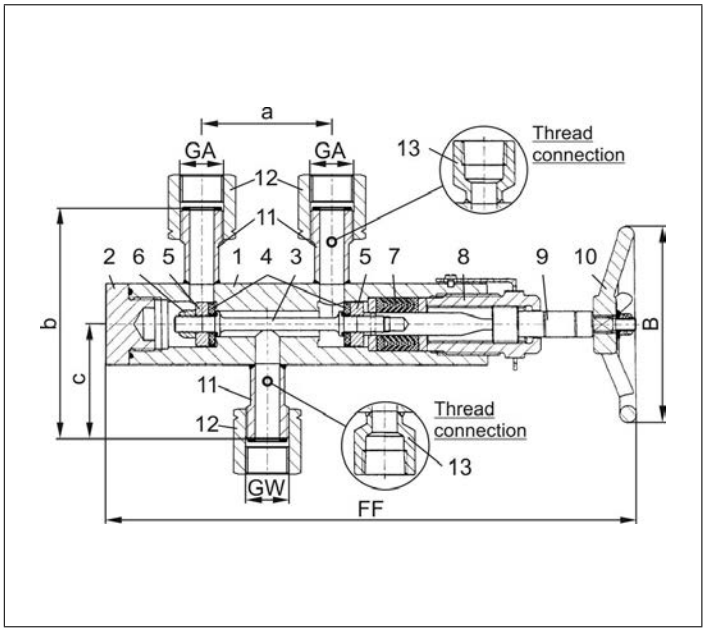

Typ 06401 - Standard design	Technical data	
Nominal size	**DN**	**15**
Inlet	GW	G 3/4
Outlet	GA	G 3/4
Face-to-face dimension	FF	325
Handwheel-Ø	B	120
Length	a	80
Height	b	140
Length	c	70
Weight	ca. kg	5.0
Kvs - Value, one side open	m^3/h	4.0
Cv - Value, one side open	gal /min	4.6
Kvs - Value, central position	m^3/h	5.8
Cv - Value, central position	gal /min	6.7

Dimensions in mm.

Edition 2022-11

Changeover Valves

Type 06401 - Changeover Valve DN15

Cryogenic Changeover Valves, stainless steel, PN160
for the installation of two safety valves,
with two test connections G 1/4,
"cleaned and degreased for oxygen service"

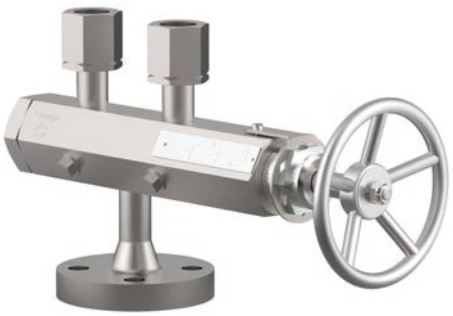

Part No. 06401.0150.9029
Inlet: Flange, DN15, PN 160
Outlet: locking sleeve G 3/4

Part No. 06401.0150.9***
*** Changeover valves with other flanges for vessel connection and threaded connection for safety valves on request

Available options - on request only:
· Changeover valves with pneumatic or electric actuator
· Outlet GA with female thread (G) acc. to ISO 228/1
· Outlet GA with female thread NPT acc. to ANSI B 1.20.1
· Outlet GA with flanged connections

Applications:
Approved for air gases, vapours and cryogenic liquefied gases incl. LNG.
Working temperature: -196°C / -321°F (77K) up to +185°C / +365°F (458K)

Materials		DIN EN	ASTM
1	Body	1.4571	A 276 Grade 316Ti
2	Plug	1.4571	A 276 Grade 316Ti
3	Disc stem	1.4571	A 276 Grade 316Ti
4	Valve seal	PTFE / Carbon filled (25%)	
5	Disc	1.4571	A 276 Grade 316Ti
6	Disc nut	1.4301/A2	A 194 B8
7	Gland packing	PTFE / Carbon filled (25%)	
8	Head piece	CW452K nickel plated	B 159 UNS C51900 nickel plated
9	Stem	1.4571	A 276 Grade 316Ti
10	Handwheel	Aluminium alloy	
11	Welding piece	1.4571	A 276 Grade 316Ti
12	Locking sleeve	1.4571	A 276 Grade 316Ti
13	Thread connection	1.4571	A 276 Grade 316Ti
14	Adapter	1.4571	A 276 Grade 316Ti
15	Flange	1.4571	A 276 Grade 316Ti

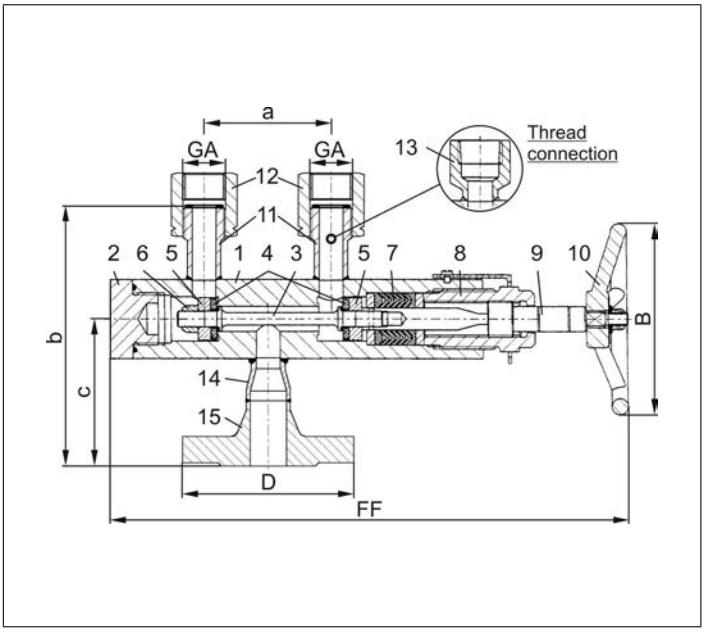

Type 06401 - Standard design	Technical data	
Nominal size	**DN**	**15**
Flange diameter	D	105
Outlet	GA	G 3/4
Face-to-face dimension	FF	325
Handwheel-Ø	B	120
Length	a	80
Height	b	170
Length	c	100
Weight	ca. kg	6.0
Kvs - Value, one side open	m^3/h	4.0
Cv - Value, one side open	gal /min	4.6
Kvs - Valve, central position	m^3/h	5.8
Cv - Valve, central position	gal /min	6.7

Dimensions in mm.

Changeover Valves

Type 06401 - Changeover Valve DN25

Cryogenic Changeover Valves, stainless steel, PN125
for the installation of two safety valves,
with two test connections G 1/4,
"cleaned and degreased for oxygen service"

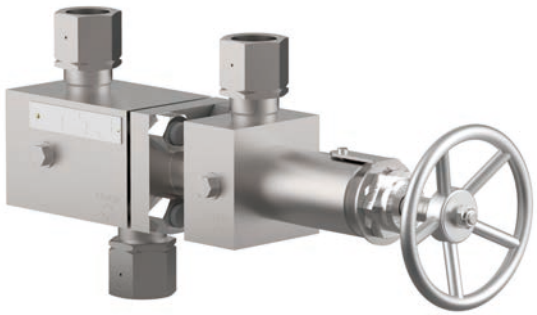

Part No. 06401.0250.9045
In- and Outlet: locking sleeve G 1

Part No. 06401.0250.9***
*** Changeover valves with other threads for vessel or safety valve connection on request

Available options - on request only:
· Changeover valves with pneumatic or electric actuator
· Inlet GW and/or outlet GA with female thread (G) acc. to ISO 228/1
· Inlet GW and/or outlet GA with female thread NPT acc. to ANSI B 1.20.1
· Combination of different thread connections GW - GA

Applications:
Approved for air gases, vapours and cryogenic liquefied gases incl. LNG.
Working temperature: -196°C / -321°F (77K) up to +185°C / +365°F (458K)

Materials		DIN EN	ASTM
1	Body	1.4571	A 276 Grade 316Ti
2	Plug	1.4571	A 276 Grade 316Ti
3	Disc stem	1.4571	A 276 Grade 316Ti
4	Valve seal	PCTFE	
5	Disc	1.4571	A 276 Grade 316Ti
6	Disc stem	1.4571	A 276 Grade 316Ti
7	Gland packing	PTFE / Carbon filled (25%)	
8	Head piece	CW452K nickel plated	B 159 UNS C51900 nickel plated
9	Stem	1.4571	A 276 Grade 316Ti
10	Handwheel	Aluminium alloy	
11	Welding piece	1.4571	A 276 Grade 316Ti
12	Locking sleeve	1.4571	A 276 Grade 316Ti
13	Thread connection	1.4571	A 276 Grade 316Ti

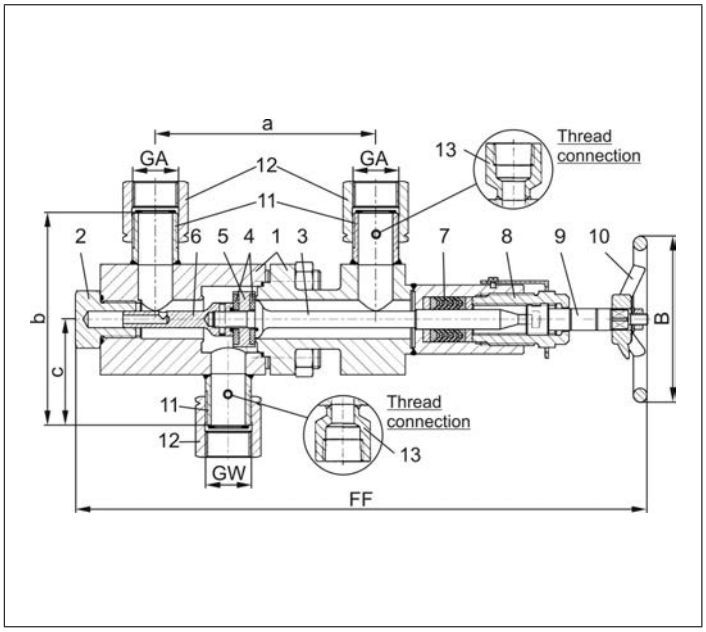

Typ 06401 - Standard design	Technical data	
Nominal size	**DN**	**25**
Inlet	GW	G 1
Outlet	GA	G 1
Face-to-face dimension	FF	415
Handwheel-Ø	B	120
Length	a	160
Height	b	160
Length	c	80
Weight	ca. kg	11.7
Kvs - Value, one side open	m^3/h	13.0
Cv - Value, one side open	gal /min	15.0
Kvs - Value, central position	m^3/h	15.5
Cv - Value, central position	gal /min	17.9

Dimensions in mm.

Edition 2022-11

Changeover Valves

Type 06401 - Changeover Valve DN25

Cryogenic Changeover Valves, stainless steel, PN160
for the installation of two safety valves,
with two test connections G 1/4,
"cleaned and degreased for oxygen service"

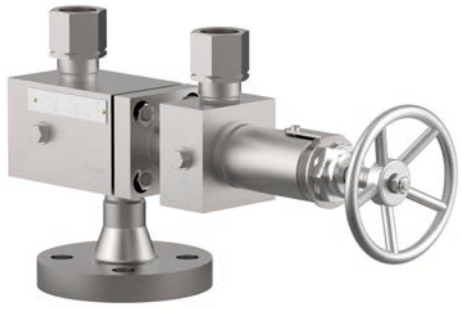

Part No. 06401.0250.9018
Inlet Flange, DN 25, PN 160
Outlet: locking sleeve G1

Part No. 06401.0250.9***
*** Changeover valves with other flanges for vessel connection
and connection for safety valves on request

Available options - on request only:
· Changeover valves with pneumatic or electric actuator
· Outlet GA with female thread (G) acc. to ISO 228/1
· Outlet GA with female thread NPT acc. to ANSI B 1.20.1
· Outlet GA with flanged connections

Applications:
Approved for air gases, vapours and cryogenic liquefied gases incl. LNG.
Working temperature: -196°C / -321°F (77K) up to +185°C / +365°F (458K)

Materials		DIN EN	ASTM
1	Body	1.4571	A 276 Grade 316Ti
2	Plug	1.4571	A 276 Grade 316Ti
3	Disc stem	1.4571	A 276 Grade 316Ti
4	Valve seal	PCTFE	
5	Disc	1.4571	A 276 Grade 316Ti
6	Disc stem	1.4571	A 276 Grade 316Ti
7	Gland packing	PTFE / Carbon filled (25%)	
8	Head piece	CW452K nickel plated	B 159 UNS C51900 nickel plated
9	Stem	1.4571	A 276 Grade 316Ti
10	Handwheel	Aluminium alloy	
11	Welding piece	1.4571	A 276 Grade 316Ti
12	Locking sleeve	1.4571	A 276 Grade 316Ti
13	Thread connection	1.4571	A 276 Grade 316Ti
14	Adapter	1.4571	A 276 Grade 316Ti
15	Flange	1.4571	A 276 Grade 316Ti

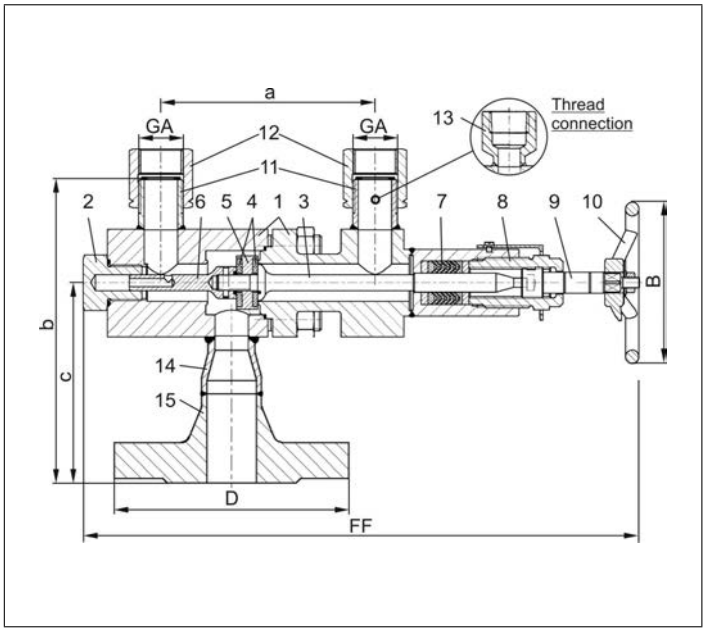

Type 06401 - Standard design	Technical data	
Nominal size	**DN**	**25**
Flange diameter	D	140
Outlet	GA	G 1
Face-to-face dimension	FF	415
Handwheel-Ø	B	120
Length	a	160
Height	b	200
Length	c	125
Weight	ca. kg	14.1
Kvs - Value, one side open	m^3/h	13.0
Cv - Value, one side open	gal /min	15.0
Kvs - Valve, central position	m^3/h	15.5
Cv - Valve, central position	gal /min	17.9

Dimensions in mm.

Changeover Valves

Type 06401 - Bellow Sealed Changeover Valve

Cryogenic Bellow Sealed Changeover Valves, stainless steel, PN63
for the installation of two safety valves,
with indicator and two test connections G 1/4,
"cleaned and degreased for oxygen service"

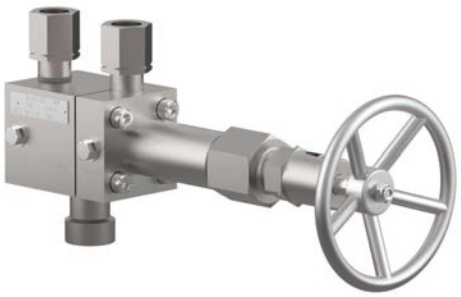

Part No. 06401.0150.9***
*** In- and outlet connections with locking sleeve, female thread or flanges on request, working pressure up to PN100

Part No. 06401.0250.9***
*** In- and outlet connections with locking sleeve, female thread or flanges on request, working pressure up to PN63

Available options - on request only:
· Changeover valves with pneumatic or electric actuator

Applications:
Approved for air gases, vapours and cryogenic liquefied gases incl. LNG.
Working temperature: -196°C / -321°F (77K) up to +185°C / +365°F (458K)

Materials		DIN EN	ASTM
1	Body I	1.4571	A 276 Grade 316Ti
2	Body II	1.4571	A 276 Grade 316Ti
3	Bellow stem	1.4571	A 276 Grade 316Ti
4	Valve seal	PCTEF	
5	Disc	1.4571	A 276 Grade 316Ti
6	Bellow	1.4571	A 276 Grade 316Ti
7	Head piece I	1.4571	A 276 Grade 316Ti
8	Head piece II	1.4571	A 276 Grade 316Ti
9	Stem	CW452K	B 159 UNS C51900
10	O-Rings	FPM (VITON)	
11	Top ring	1.4571	A 276 Grade 316Ti
12	Handwheel	Aluminium alloy	
13	Welding piece	1.4571	A 276 Grade 316Ti
14	Locking sleeve	1.4571	A 276 Grade 316Ti
15	Thread connection	1.4571	A 276 Grade 316Ti
16	Flange	1.4571	A 276 Grade 316Ti

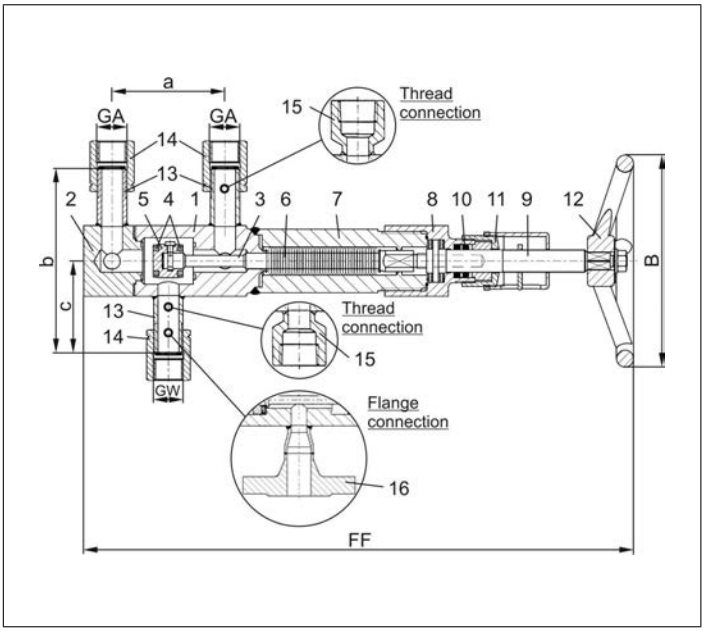

Typ 06401 - Standard design	Technical data		
Nominal size	**DN**	**15**	**25**
Dimension code	.X.	0150	0250
Inlet	GW	G 3/4	G 1
Outlet	GA	G 3/4	G 1
Face-to-face dimension	FF	390	390
Handwheel-Ø	B	150	150
Length	a	80	80
Height	b	130	160
Length	c	65	80
Weight	ca. kg	8.0	9.9
Kvs - Value, one side open	m^3/h	9.5	13.0
Cv - Value, one side open	gal /min	11.0	15.0
Kvs - Value, central position	m^3/h	13.5	15.5
Cv - Value, central position	gal /min	15.6	17.9

Dimensions in mm.

Edition 2022-11

Changeover Valves
Type 06900 - Bursting disc brass

for Cryogenic Diverter Valves

burst pressure range: 4,0 bar (58.0 psi) - 52,0 bar (754.0 psi)
indicated burst pressure at burst temperature +20°C (68°F)
burst pressure tolerance: ± 5 %
" cleaned and degreased for oxygen service "

Part No. 06900.0400.00XX.XX
male thread G1/2 acc. to ISO 228/1

Part No. 06900.0400.50XX.XX
male thread 1/2" NPT acc. to ANSI B 1.20.1
XX.XX = Code for burst pressure

Example:
burst pressure **5,20** bar - 06900.0400.00**05.20**
burst pressure **24,00** bar - 06900.0400.00**24.00**
Calculation bar in psi: 1,0 bar = 14,503 psi (7,20 bar = 104,4 psi)

Available options - on request only:
· other thread sizes
· other burst pressures

Working temperature: -196°C (77K) up to +120°C (393K)

Materials		DIN EN	ASTM
1	Body	CW614N	B 283 UNS C38500
2	Burst disc	1.4401	AISI 316
3	Ring	CW614N	B 283 UNS C38500

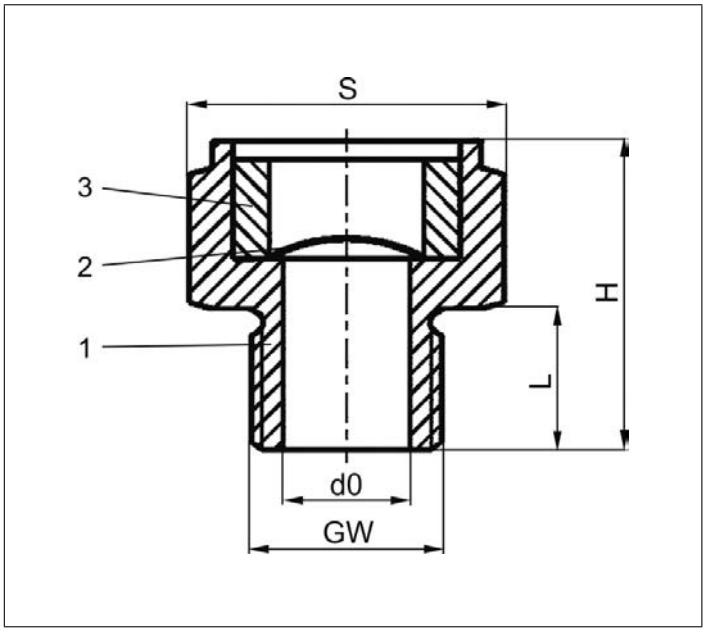

Part No. (G-thread)	Standard-burst pressures
06900.0400.0005.20	5.2 bar / 75.4 psi
06900.0400.0007.20	7.2 bar / 104.4 psi
06900.0400.0014.00	14.0 bar / 203.0 psi
06900.0400.0016.50	16.5 bar / 239.3 psi
06900.0400.0020.20	20.2 bar / 292.9 psi
06900.0400.0024.00	24.0 bar / 348.0 psi
06900.0400.0025.08	25.08 bar / 363.7 psi
06900.0400.0027.00	27.0 bar / 391.5 psi
06900.0400.0046.00	46.0 bar / 667.0 psi

Part No. (NPT-thread)	Standard-burst pressures
06900.0400.5005.20	5.2 bar / 75.4 psi
06900.0400.5007.20	7.2 bar / 104.4 psi
06900.0400.5014.00	14.0 bar / 203.0 psi
06900.0400.5017.00	17.0 bar / 246.5 psi
06900.0400.5020.20	20.2 bar / 292.2 psi
06900.0400.5024.00	24.0 bar / 348.0 psi
06900.0400.5027.00	27.0 bar / 391.5 psi
06900.0400.5032.00	32.0 bar / 464.1 psi
06900.0400.5046.00	46.0 bar / 667.0 psi

Type 06900	Technical data	
Nominal size	**GW**	**1/2**
Height G-Thread	H	33,0
Height NPT-Thread	H	37,5
Length G-Thread	L	15,5
Length NPT-Thread	L	20,0
Orifice	d_0	13,0
Wrench size across flats	S	30
Weight	ca. kg	0,1
Kvs-Value	m^3/h	11,0
Cv-Value	gal/min	13,1

Dimensions in mm.

Changeover Valves

Type 06901 - Bursting disc stainless steel

for Cryogenic Diverter Valves

burst pressure range: 4,0 bar (58.0 psi) - 52,0 bar (754.0 psi)
indicated burst pressure at burst temperature +20°C (68°F)
burst pressure tolerance: ± 10 %
" cleaned and degreased for oxygen service "

Part No. 06901.0400.00XX.XX
male thread G1/2 acc. to ISO 228/1

Part No. 06901.0400.50XX.XX
male thread 1/2" NPT acc. to ANSI B 1.20.1
XX.XX = Code for burst pressure

Example:
burst pressure **5,20** bar - 06901.0400.00**05.20**
burst pressure **46,00** bar - 06901.0400.00**46.00**
Calculation bar in psi: 1,0 bar = 14,503 psi (40,00 bar = 580,1 psi)

Available options - on request only:
· other thread sizes
· other burst pressures

Working temperature: -196°C (77K) up to +120°C (393K)

Materials		DIN EN	ASTM
1	Body	1.4404	A 276 Grade 316L
2	Burst disc	Nickel	Nickel
3	Ring	1.4404	A 276 Grade 316L

Part No. (G-thread)	Standard-burst pressures
06901.0400.0005.20	5.2 bar / 75.4 psi
06901.0400.0007.00	7.0 bar / 101.5 psi
06901.0400.0008.10	8.1 bar / 117.4 psi
06901.0400.0010.00	10.0 bar / 145.0 psi
06901.0400.0015.00	15.0 bar / 217.5 psi
06901.0400.0018.00	18.0 bar / 261.0 psi
06901.0400.0020.20	20.2 bar / 292.9 psi
06901.0400.0020.57	20.57 bar / 298.34 psi
06901.0400.0022.00	22.0 bar / 319.0 psi
06901.0400.0024.00	24.0 bar / 348.0 psi
06901.0400.0027.00	27.0 bar / 391.5 psi
06901.0400.0043.56	43.56 bar / 631.78 psi

Part No. (NPT-thread)	Standard-burst pressures
06901.0400.5027.00	27.0 bar / 391.5 psi

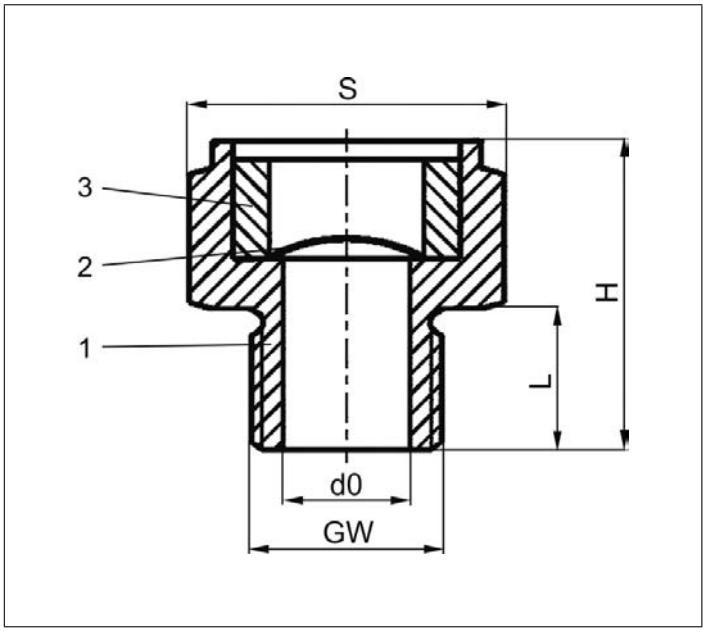

Type 06901	Technical data	
Nominal size	**GW**	**1/2**
Height G-Thread	H	34,0
Height NPT-Thread	H	38,5
Length G-Thread	L	15,5
Length NPT-Thread	L	20,0
Orifice	d_0	13,0
Wrench size a/f up to 8,0 bar	S	46
Wrench size a/f from 8,01 bar	S	30
Weight	ca. kg	0,1
Kvs-Value	m^3/h	11,0
Cv-Value	gal/min	13,1

Dimensions in mm.

Edition 2022-11

Fire Safe and Offshore Applications

Offshore and LNG: The MS Stavangerfjord of the shipping company Fjord Line ferry runs between Norway and Denmark fuelled 100% with the environmentally friendly LNG. Equipped with HEROSE valves specifically for LNG use.

Fire Safe Valves
Type 01651 - Globe Valve

Cryogenic-Globe and Globe/Check Valves, PN50 (DN65=PN45)
“ Fire safe ” type test approval acc. to EN ISO 10497

Stainless steel body and topwork, “ live loaded ” gland packing
“ cleaned and degreased for oxygen service "

Part No. 01651.X.000*
Part No. 01651.X.500* Globe/Check Valve
* Butt weld connection for stainless steel pipes acc. to ISO 1127 or ASTM A312

Part No. 01651.X.0004
Part No. 01651.X.5004 Globe/Check Valve
Socket weld connection for stainless steel pipes acc. to ISO 1127 or ASTM A312

Available options - on request only:
· Welded stainless steel stubs acc. to ISO 1127 or ASTM A312 - length FF + 200mm
· Valve with control disc (tapered design)

Applications:
Approved for air gases, vapours and cryogenic liquefied gases incl. LNG.
Working temperature: -196°C / -321°F (77K) up to +120°C / +248°F (393K)
Recommended working temperature: -60°C / -76°F (213K) up to +120°C / +248°F (393K)

Materials		DIN EN	ASTM
1	Body	1.4308	A 351 CF8
2	Valve seal	PTFE / Carbon filled (25%)	
3	Disc	1.4301	A 276 Grade 304
4	Bonnet gasket	Graphite	
5	Headpiece	1.4301 / 1.4308	A 276 Grade 304 / A 351 CF8
6	Bolts	1.4301/A2	A 194 B8
8	Stem	1.4301	A 276 Grade 304
9	Gland packing	Graphite / PTFE / MICA	
10	Gland nut	1.4305	A 276 Grade 303
11	Handwheel	1.4409	A 351 CF3M
12	Spring	1.4310	A 313 Grade 301
13	Bush	CW452K	B 159 UNS C51900

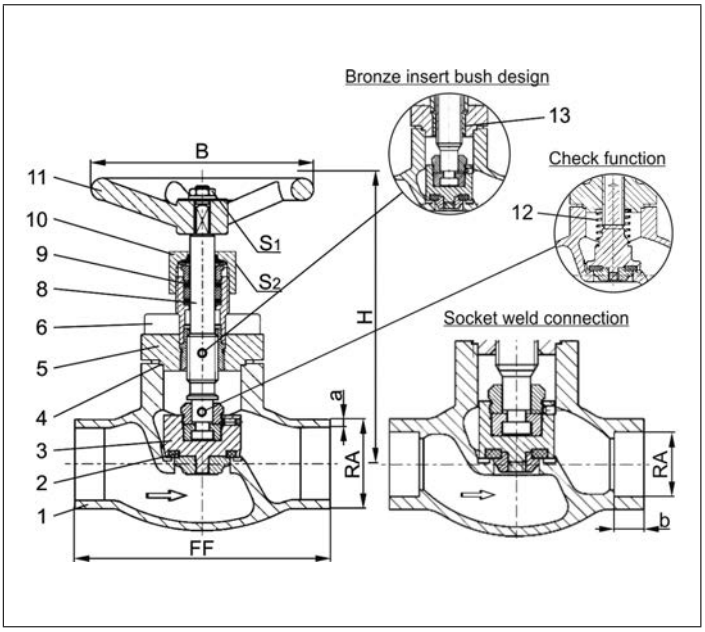

Type 01651 - Standard design	Technical data												
Nominal size	**DN**	**10**	**15**	**15**	**20**	**25**	**32**	**40**	**40**	**50**	**65**	**80**	**100**
Dimension code	.X.	1012	1517	1521	2026	2533	3238	4042	4048	5060	657x	8088	0114
Face-to-face dimension	FF	70	85	85	100	115	115	130	130	155	205	245	280
Height	H	140	140	140	140	140	170	175	175	200	260	310	350
Outside pipe-Ø ISO 1127	RA	12.0	17.2	21.3	26.9	33.7	38.0	42.4	48.3	60.3	76.1	88.9	114.3
Wall thickness pipe ISO 1127	a	1.0	1.6	2.0	2.0	2.0	2.0	2.0	2.0	2.0	2.9	3.2	6.0
Outside pipe-Ø ASTM A312	RA	13.72	17.15	21.34	26.67	33.40	-	42.16	48.26	60.33	73.03	88.90	114.3
Wall thickness pipe ASTM A312	a	dimensions acc. to S10 or S40											
Socket depth	b	6	10	10	13	13	-	13	13	16	16	16	20
Handwheel-Ø	B	100	100	100	100	100	125	125	125	125	200	250	315
Wrench size across flats	S_1	7	7	7	7	7	10	10	10	10	10	10	12
Wrench size across flats	S_2	30	30	30	30	30	36	36	36	36	36	36	41
Weight	ca. kg	1.0	1.25	1.3	1.7	2.0	2.8	4.2	4.2	6.7	10.7	16.0	23.0
Kvs-Value	m^3/h	1.6	3.8	4.3	6.7	11.5	14.0	20.6	22.6	37.1	71.1	104.0	170.0
Cv-Value	gal/min	1.9	4.4	5.0	7.8	13.4	16.2	23.9	26.3	43.2	82.9	121.3	198.3

Dimensions in mm.

Fire Safe Valves
Type 01655 - Globe Valve

Cryogenic-Globe and Globe/Check Valves, PN50
“ Fire safe ” type test approval acc. to EN ISO 10497

Stainless steel body and topwork,
“ live loaded ” gland packing
“ cleaned and degreased for oxygen service "

Part No. 01655.X.0001
Part No. 01655.X.5001 Globe/Check Valve
Female thread connection (G) acc. to ISO 228/1

Part No. 01655.X.0006
Part No. 01655.X.5006 Globe/Check Valve
Female thread connection NPT acc. to ANSI B 1.20.1

Available options - on request only:
· Female thread connection (R) acc. to ISO 7-Rc
· Valve with control disc (tapered design)

Applications:
Approved for air gases, vapours and cryogenic liquefied gases incl. LNG.
Working temperature: -196°C / -321°F (77K) up to +120°C / +248°F (393K)
Recommended working temperature: -60°C / -76°F (213K) up to +120°C / +248°F (393K)

Materials		DIN EN	ASTM
1	Body	1.4308	A 351 CF8
2	Valve seal	PTFE / Carbon filled (25%)	
3	Disc	1.4301	A 276 Grade 304
4	Bonnet gasket	Graphite	
5	Headpiece	1.4301 / 1.4308	A 276 Grade 304 / A 351 CF8
6	Bolts	1.4301/A2	A 194 B8
8	Stem	1.4301	A 276 Grade 304
9	Gland packing	Graphite / PTFE / MICA	
10	Gland nut	1.4305	A 276 Grade 303
11	Handwheel	1.4409	A 351 CF3M
12	Spring	1.4310	A 313 Grade 301
13	Bush	CW452K	B 159 UNS C51900

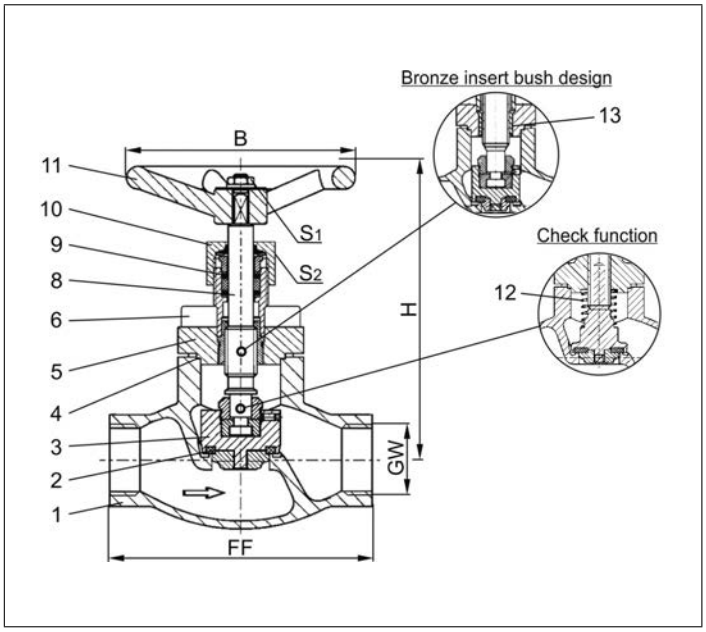

Type 01655 - Standard design	Technical data								
Nominal size	**DN**	**10**	**10**	**15**	**20**	**25**	**40**	**40**	**50**
Thread size	GW	1/4	3/8	1/2	3/4	1	1-1/4	1-1/2	2
Dimension code	.X.	0200	0300	0400	0600	1000	1200	1400	2000
Face-to-face dimension	FF	70	70	85	100	115	130	130	155
Height	H	140	140	140	140	140	175	175	200
Handwheel-Ø	B	100	100	100	100	100	125	125	125
Wrench size across flats	S_1	7	7	7	7	7	10	10	10
Wrench size across flats	S_2	30	30	30	30	30	36	36	36
Weight	ca. kg	1.0	1.0	1.3	1.7	2.0	4.2	4.2	6.7
Kvs-Value	m^3/h	1.6	2.2	4.3	6.7	11.5	20.6	22.6	37.1
Cv-Value	gal/min	1.9	2.6	5.0	7.8	13.4	23.9	26.3	43.2

Dimensions in mm.

Edition 2022-11

Fire Safe Valves
Type 03651 - Globe Valve

Cryogenic-Globe and Globe/Check Valves, PN40
“ Fire safe ” type test approval acc. to EN ISO 10497

Stainless steel body and topwork,
“ live loaded ” gland packing
“ cleaned and degreased for oxygen service "

Part No. 03651.X.0002
Part No. 03651.X.5002 Globe/Check Valve
Flanged connection acc. to DIN EN 1092-1 PN40

Available options - on request only:
· Valve with control disc (tapered design)

Applications:
Approved for air gases, vapours and cryogenic liquefied gases incl. LNG.
Working temperature: -196°C / -321°F (77K) up to +120°C / +248°F (393K)
Recommended working temperature: -60°C / -76°F (213K) up to +120°C / +248°F (393K)

Materials		DIN EN	ASTM
1	Body	1.4308	A 351 CF8
2	Valve seal	PTFE / Carbon filled (25%)	
3	Disc	1.4301	A 276 Grade 304
4	Bonnet gasket	Graphite	
5	Headpiece	1.4301 / 1.4308	A 276 Grade 304 / A 351 CF8
6	Bolts	1.4301/A2	A 194 B8
8	Stem	1.4301	A 276 Grade 304
9	Gland packing	Graphite / PTFE / MICA	
10	Gland nut	1.4305	A 276 Grade 303
11	Handwheel	1.4409	A 351 CF3M
12	Spring	1.4310	A 313 Grade 301
13	Bush	CW452K	B 159 UNS C51900

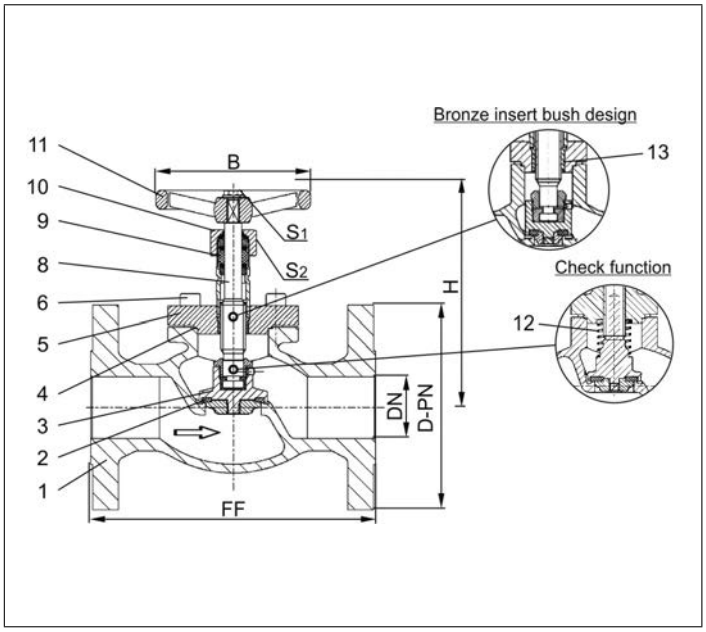

Type 03651 - Standard design	Technical data									
Nominal size	**DN**	**15**	**20**	**25**	**40**	**50**	**65**	**80**	**100**	**150**
Dimension code - Flange EN 1092-1 PN40	.X.	0150	0200	0250	0400	0500	0650	0800	1000	1500
Flange-Ø	D-PN	95	105	115	150	165	185	200	235	300
Face-to-face dimension	FF	140	150	160	200	230	290	310	350	550
Height	H	130	130	140	170	200	260	310	350	380
Handwheel-Ø	B	100	100	100	125	125	200	250	315	360
Wrench size across flats	S_1	7	7	7	10	10	10	10	12	15
Wrench size across flats	S_2	30	30	30	36	36	36	36	41	41
Weight	ca. kg	3.0	3.5	4.5	9.0	13.0	21.0	28.0	42.0	83.0
Kvs-Value	m^3/h	4.3	6.7	11.5	22.6	37.1	71.1	104.0	170.0	350.0
Cv-Value	gal/min	5.0	7.8	13.4	26.3	43.2	82.9	121.3	198.3	408.4

Dimensions in mm. Compliance of tightness requirements acc. to EN 1626 for DN150 up to 20 bar differential pressure. In the range of >20-40 bar, 350-700ml per second (1 bar, 20°C [68°F]) are reached.

Fire Safe Valves
Type 03651 - Globe Valve

Cryogenic-Globe and Globe/Check Valves, class 300
“ Fire safe ” type test approval acc. to EN ISO 10497

Stainless steel body and topwork,
“ live loaded ” gland packing
“ cleaned and degreased for oxygen service "

Part No. 03651.X.0003
Part No. 03651.X.5003 Globe/Check Valve
Flanged connection acc. to ANSI B16.5 class 300

Available options - on request only:
· Valve with control disc (tapered design)

Applications:
Approved for air gases, vapours and cryogenic liquefied gases incl. LNG.
Working temperature: -196°C / -321°F (77K) up to +120°C / +248°F (393K)
Recommended working temperature: -60°C / -76°F (213K) up to +120°C / +248°F (393K)

Materials		DIN EN	ASTM
1	Body	1.4308	A 351 CF8
2	Valve seal	PTFE / Carbon filled (25%)	
3	Disc	1.4301	A 276 Grade 304
4	Bonnet gasket	Graphite	
5	Headpiece	1.4301 / 1.4308	A 276 Grade 304 / A 351 CF8
6	Bolts	1.4301/A2	A 194 B8
8	Stem	1.4301	A 276 Grade 304
9	Gland packing	Graphite / PTFE / MICA	
10	Gland nut	1.4305	A 276 Grade 303
11	Handwheel	1.4409	A 351 CF3M
12	Spring	1.4310	A 313 Grade 301
13	Bush	CW452K	B 159 UNS C51900

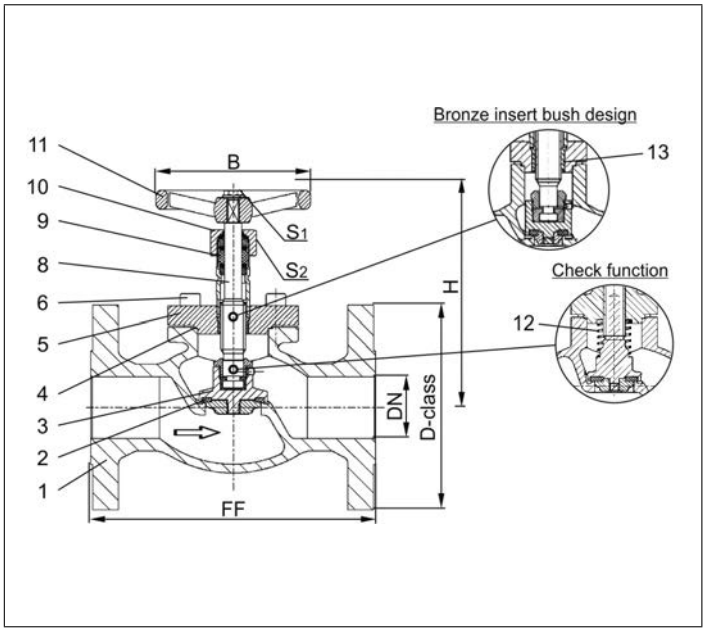

Type 03651 - Standard design	Technical data									
Nominal size	**DN**	**15**	**20**	**25**	**40**	**50**	**65**	**80**	**100**	**150**
Dimension code - Flange ANSI B16.5 class 300	.X.	0400	0600	1000	1400	2000	2400	3000	4000	6000
Flange-Ø	D-class	95	115	125	155	165	190	210	255	320
Face-to-face dimension	FF	140	150	160	200	230	290	310	350	597
Height	H	130	130	140	170	200	260	310	350	380
Handwheel-Ø	B	100	100	100	125	125	200	250	315	360
Wrench size across flats	S_1	7	7	7	10	10	10	10	12	15
Wrench size across flats	S_2	30	30	30	36	36	36	36	41	41
Weight	ca. kg	3.0	3.5	4.5	9.0	13.0	21.0	28.0	42.0	83.0
Kvs-Value	m^3/h	4.3	6.7	11.5	22.6	37.1	71.1	104.0	170.0	350.0
Cv-Value	gal/min	5.0	7.8	13.4	26.3	43.2	82.9	121.3	198.3	408.4

Dimensions in mm. Compliance of tightness requirements acc. to EN 1626 for DN150 up to 20 bar differential pressure. In the range of >20-40 bar, 350-700ml per second (1 bar, 20°C [68°F]) are reached.

Edition 2022-11

Fire Safe Valves
Type 03651 - Globe Valve

Cryogenic-Globe and Globe/Check Valves, class 150
“ Fire safe ” type test approval acc. to EN ISO 10497

Stainless steel body and topwork,
“ live loaded ” gland packing
“ cleaned and degreased for oxygen service "

Part No. 03651.X.0001
Part No. 03651.X.5001 Globe/Check Valve
Flanged connection acc. to ANSI B16.5 class 150

Available options - on request only:
· Valve with control disc (tapered design)

Applications:
Approved for air gases, vapours and cryogenic liquefied gases incl. LNG.
Working temperature: -196°C / -321°F (77K) up to +120°C / +248°F (393K)
Recommended working temperature: -60°C / -76°F (213K) up to +120°C / +248°F (393K)

Materials		DIN EN	ASTM
1	Body	1.4308	A 351 CF8
2	Valve seal	PTFE / Carbon filled (25%)	
3	Disc	1.4301	A 276 Grade 304
4	Bonnet gasket	Graphite	
5	Headpiece	1.4301 / 1.4308	A 276 Grade 304 / A 351 CF8
6	Bolts	1.4301/A2	A 194 B8
8	Stem	1.4301	A 276 Grade 304
9	Gland packing	Graphite / PTFE / MICA	
10	Gland nut	1.4305	A 276 Grade 303
11	Handwheel	1.4409	A 351 CF3M
12	Spring	1.4310	A 313 Grade 301
13	Bush	CW452K	B 159 UNS C51900

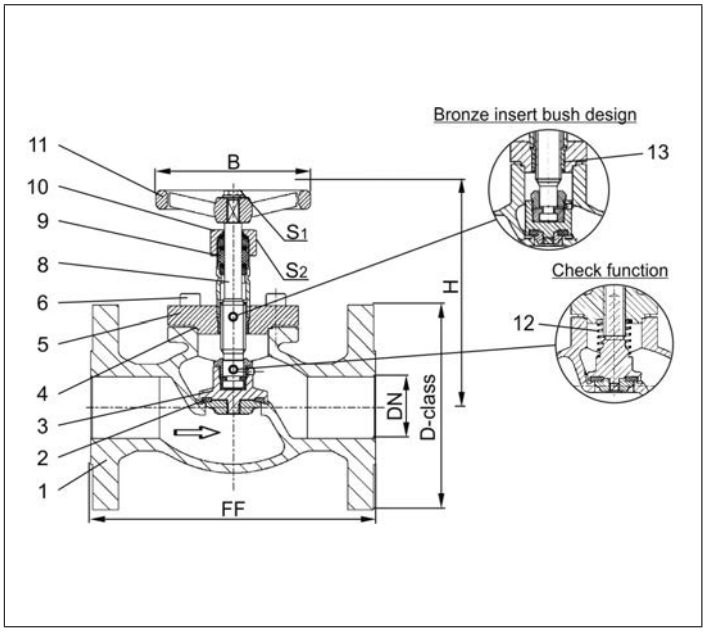

Type 03651 - Standard design	Technical data									
Nominal size	**DN**	**15**	**20**	**25**	**40**	**50**	**65**	**80**	**100**	**150**
Dimension code - Flange ANSI B16.5 class 150	.X.	0400	0600	1000	1400	2000	2400	3000	4000	6000
Flange-Ø	D-class	90	100	110	125	150	180	190	230	280
Face-to-face dimension	FF	140	150	160	200	230	290	310	350	577
Height	H	130	130	140	170	200	260	310	350	380
Handwheel-Ø	B	100	100	100	125	125	200	250	315	360
Wrench size across flats	S_1	7	7	7	10	10	10	10	12	15
Wrench size across flats	S_2	30	30	30	36	36	36	36	41	41
Weight	ca. kg	3.0	3.5	4.5	9.0	13.0	21.0	28.0	42.0	83.0
Kvs-Value	m^3/h	4.3	6.7	11.5	22.6	37.1	71.1	104.0	170.0	350.0
Cv-Value	gal/min	5.0	7.8	13.4	26.3	43.2	82.9	121.3	198.3	408.4

Dimensions in mm. Compliance of tightness requirements acc. to EN 1626 for DN150 up to 20 bar differential pressure. In the range of >20-40 bar, 350-700ml per second (1 bar, 20°C [68°F]) are reached.

Fire Safe Valves

Type 01641 - Globe Valve

Cryogenic-Globe and Globe/Check Valves, PN50 (DN65=PN45, DN150=PN40)
“ Fire safe ” type test approval acc. to EN ISO 10497

Stainless steel body and topwork, “ live loaded ” gland packing
“ cleaned and degreased for oxygen service “

Part No. 01641.X.001* (H = 270mm)
Part No. 01641.X.002* (H = 370mm)
Part No. 01641.X.501* (H = 270mm) Globe/Check Valve
Part No. 01641.X.502* (H = 370mm) Globe/Check Valve
* Butt weld connection for stainless steel pipes acc. to ISO 1127 or ASTM A312

Part No. 01641.X.0014 (H = 270mm)
Part No. 01641.X.0024 (H = 370mm)
Part No. 01641.X.5014 (H = 270mm) Globe/Check Valve
Part No. 01641.X.5024 (H = 370mm) Globe/Check Valve
Socket weld connection for stainless steel pipes acc. to ISO 1127 or ASTM A312

Available options - on request only:
· Welded stainless steel stubs acc. to ISO 1127 or ASTM A312 - length FF + 200mm
· Extension H up to 900mm
· Valve with control disc (tapered design)

Applications:
Approved for air gases, vapours and cryogenic liquefied gases incl. LNG.
Working temperature: -196°C / -321°F (77K) up to +120°C / +248°F (393K)

Materials		DIN EN	ASTM
1	Body	1.4308	A 351 CF8
2	Valve seal	PTFE / Carbon filled (25%)	
3	Disc	1.4301	A 276 Grade 304
4	Bonnet gasket	Graphite	
5	Headpiece	1.4301 / 1.4308	A 276 Grade 304 / A 351 CF8
6	Bolts	1.4301/A2	A 194 B8
7	Elongation tube	1.4541	A 213 TP 321
8	Stem	1.4301	A 276 Grade 304
9	Gland packing	Graphite / PTFE / MICA	
10	Gland nut	1.4305	A 276 Grade 303
11	Handwheel	1.4409	A 351 CF3M
12	Spring	1.4310	A 313 Grade 301
13	Bush	CW452K	B 159 UNS C51900

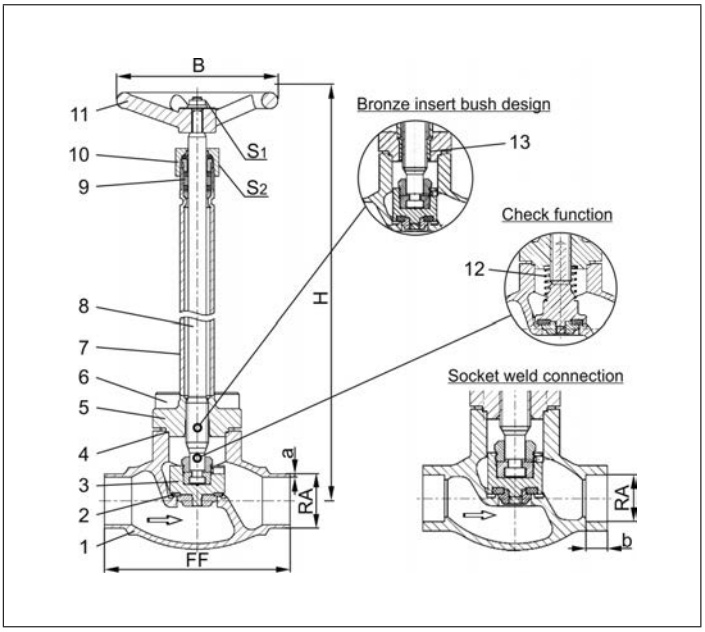

ASSOCIATION OF AMERICAN RAILROADS

Type 01641 - Standard design	Technical data													
Nominal size	**DN**	**10**	**15**	**15**	**20**	**25**	**32**	**40**	**40**	**50**	**65**	**80**	**100**	**150**
Dimension code	.X.	1012	1517	1521	2026	2533	3238	4042	4048	5060	657x	8088	0114	0168
Face-to-face dimension	FF	70	85	85	100	115	115	130	130	155	205	245	280	400
Height	H	270 mm or 370 mm											370	420
Outside pipe-Ø ISO 1127	RA	12.0	17.2	21.3	26.9	33.7	-	42.4	48.3	60.3	76.1	88.9	114.3	168.3
Wall thickness pipe ISO 1127	a	1.0	1.6	2.0	2.0	2.0	-	2.0	2.0	2.0	2.9	3.2	6.0	7.11
Outside pipe-Ø ASTM A312	RA	13.72	17.15	21.34	26.67	33.40	-	42.16	48.26	60.33	73.03	88.90	114.3	168.3
Wall thickness pipe ASTM A312	a	dimensions acc. to S10 or S40												
Socket depth	b	6	10	10	13	13	-	13	13	16	16	16	20	20
Handwheel-Ø	B	100	100	100	100	100	-	125	125	125	200	250	315	360
Wrench size across flats	S_1	7	7	7	7	7	-	10	10	10	10	10	12	15
Wrench size across flats	S_2	30	30	30	30	30	-	36	36	36	36	36	41	41
Weight	ca. kg	1.4	1.65	1.7	2.1	2.4	-	4.7	4.7	7.2	12.7	17.0	24.5	54.0
Kvs-Value	m^3/h	1.6	3.8	4.3	6.7	11.5	14.0	20.6	22.6	37.1	71.1	104.0	170.0	350.0
Cv-Value	gal/min	1.9	4.4	5.0	7.8	13.4	16.2	23.9	26.3	43.2	82.9	121.3	198.3	408.4

Dimensions in mm. Compliance of tightness requirements acc. to EN 1626 for DN150 up to 20 bar differential pressure. In the range of >20-40 bar, 350-700ml per second (1 bar, 20°C [68°F]) are reached.

Edition 2022-11

Fire Safe Valves
Type 01641 - Globe Valve

Cryogenic Globe Valves, DN200
“ Fire safe ” type test approval acc. to EN ISO 10497

Stainless steel body and topwork
" live loaded " gland packing

Part No. 01641.0219.001* (H=560), PN20/PN25
Part No. 01641.0219.006* (H=1000), PN20/PN25
*Butt weld connection for stainless steel pipes acc. to ISO 1127 or ASTM A312

Part No. 01641.0219.00*4, PN25
Socket weld connection for stainless steel pipes acc. to ISO 1127 or ASTM A312

In flow direction, the valve with the nominal size DN200 is conform to tightness class L1 up to 9 bar maximum differential pressure acc. to DIN 12567 for LNG use.
This standard can also be used for the tightness class of other cryogenic gases.

Available options - on request only

Applications:
Approved for air gases, vapours and cryogenic liquefied gases incl. LNG.
Working temperature: -196°C / -321°F (77K) up to +120°C / +248°F (393K)

Materials		DIN EN	ASTM
1	Body	1.4308	A 351 CF8
2	Valve seal	PTFE / Carbon filled (25%)	
3	Disc	1.4301	A 276 Grade 304
4	Bonnet gasket	Graphite	
5	Headpiece	1.4301	A 276 Grade 304
6	Bolts	1.4301/A2	A 194 B8
7	Elongation tube	1.4541	A 213 TP 321
8	Stem	1.4301	A 276 Grade 304
9	Gland packing	Graphite / PTFE / MICA	
10	Gland nut	1.4305	A 276 Grade 303
11	Handwheel	1.4571	A 313 Grade 316Ti
13	Bush	CW452K	B 159 UNS C51900

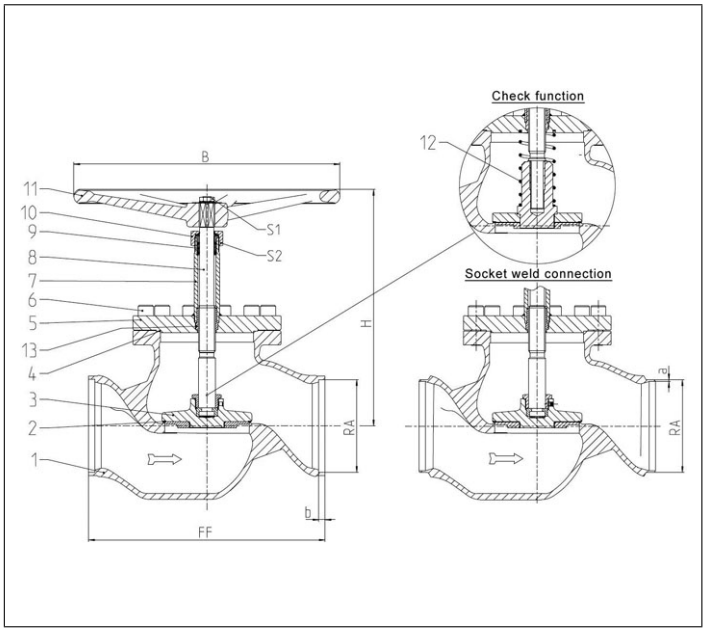

ASSOCIATION OF AMERICAN RAILROADS

Type 01641 - Standard design	Technical data	
Nominal size	**DN**	**200**
Dimension code	.X.	0219
Face-to-face dimension	FF	560
Height	H	560
Outside pipe-Ø ISO 1127	RA	219.1
Wall thickness pipe ISO 1127	a	6.3
Outside pipe-Ø ASTM A312	RA	219.1
Wall thickness pipe ASTM A312	a	dimensions acc. to S10 or S40
Socket depth	b	15
Handwheel-Ø	B	630
Wrench size across flats	S_1	30
Wrench size across flats	S_2	65
Weight	ca. kg	135
Kvs-Value	m^3/h	680
Cv-Value	gal/min	793

Dimensions in mm.

Fire Safe Valves
Type 01645 - Globe Valve

Cryogenic-Globe and Globe/Check Valves, PN50
“ Fire safe ” type test approval acc. to EN ISO 10497

Stainless steel body and topwork, “ live loaded ” gland packing
“ cleaned and degreased for oxygen service "

Part No. 01645.X.0011 (H = 270mm)
Part No. 01645.X.0021 (H = 370mm)
Part No. 01645.X.5011 (H = 270mm) Globe/Check Valve
Part No. 01645.X.5021 (H = 370mm) Globe/Check Valve
Female thread connection (G) acc. to ISO 228/1

Part No. 01645.X.0016 (H = 270mm)
Part No. 01645.X.0026 (H = 370mm)
Part No. 01645.X.5016 (H = 270mm) Globe/Check Valve
Part No. 01645.X.5026 (H = 370mm) Globe/Check Valve
Female thread connection NPT acc. to ANSI B 1.20.1

Available options - on request only:
· Female thread connection (R) acc. to ISO 7-Rc
· Extension H up to 900mm
· Valve with control disc (tapered design)

Applications:
Approved for air gases, vapours and cryogenic liquefied gases incl. LNG.
Working temperature: -196°C / -321°F (77K) up to +120°C / +248°F (393K)

Materials		DIN EN	ASTM
1	Body	1.4308	A 351 CF8
2	Valve seal	PTFE / Carbon filled (25%)	
3	Disc	1.4301	A 276 Grade 304
4	Bonnet gasket	Graphite	
5	Headpiece	1.4301 / 1.4308	A 276 Grade 304 / A 351 CF8
6	Bolts	1.4301/A2	A 194 B8
7	Elongation tube	1.4541	A 213 TP 321
8	Stem	1.4301	A 276 Grade 304
9	Gland packing	Graphite / PTFE / MICA	
10	Gland nut	1.4305	A 276 Grade 303
11	Handwheel	1.4409	A 351 CF3M
12	Spring	1.4310	A 313 Grade 301
13	Bush	CW452K	B 159 UNS C51900

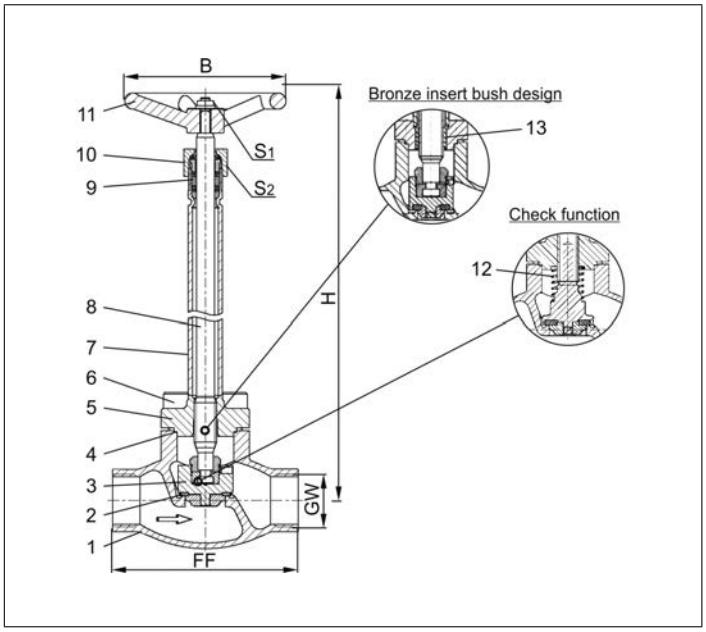

Type 01645 - Standard design	Technical data								
Nominal size	**DN**	**10**	**10**	**15**	**20**	**25**	**40**	**40**	**50**
Thread size	GW	1/4	3/8	1/2	3/4	1	1-1/4	1-1/2	2
Dimension code	.X.	0200	0300	0400	0600	1000	1200	1400	2000
Face-to-face dimension	FF	70	70	85	100	115	130	130	155
Height	H	270 mm or 370 mm							
Handwheel-Ø	B	100	100	100	100	100	125	125	125
Wrench size across flats	S_1	7	7	7	7	7	10	10	10
Wrench size across flats	S_2	30	30	30	30	30	36	36	36
Weight	ca. kg	1.4	1.4	1.7	2.1	2.4	4.7	4.7	7.2
Kvs-Value	m^3/h	1.6	2.2	4.3	6.7	11.5	20.6	22.6	37.1
Cv-Value	gal/min	1.9	2.6	5.0	7.8	13.4	23.9	26.3	43.2

Dimensions in mm.

Edition 2022-11

Fire Safe Valves
Type 03641 - Globe Valve

Cryogenic-Globe and Globe/Check Valves, PN40
“ Fire safe ” type test approval acc. to EN ISO 10497

Stainless steel body and topwork,
“ live loaded ” gland packing
“ cleaned and degreased for oxygen service "

Part No. 03641.X.0012 (H = 270mm)
Part No. 03641.X.0022 (H = 370mm)
Part No. 03641.X.5012 (H = 270mm) Globe/Check Valve
Part No. 03641.X.5022 (H = 370mm) Globe/Check Valve
Flanged connection acc. to DIN EN 1092-1 PN40

Available options - on request only:
· Extension H up to 900mm
· Valve with control disc (tapered design)

Applications:
Approved for air gases, vapours and cryogenic liquefied gases incl. LNG.
Working temperature: -196°C / -321°F (77K) up to +120°C / +248°F (393K)

Materials		DIN EN	ASTM
1	Body	1.4308	A 351 CF8
2	Valve seal	PTFE / Carbon filled (25%)	
3	Disc	1.4301	A 276 Grade 304
4	Bonnet gasket	Graphite	
5	Headpiece	1.4301 / 1.4308	A 276 Grade 304 / A 351 CF8
6	Bolts	1.4301/A2	A 194 B8
7	Elongation tube	1.4541	A 213 TP 321
8	Stem	1.4301	A 276 Grade 304
9	Gland packing	Graphite / PTFE / MICA	
10	Gland nut	1.4305	A 276 Grade 303
11	Handwheel	1.4409	A 351 CF3M
12	Spring	1.4310	A 313 Grade 301
13	Bush	CW452K	B 159 UNS C51900

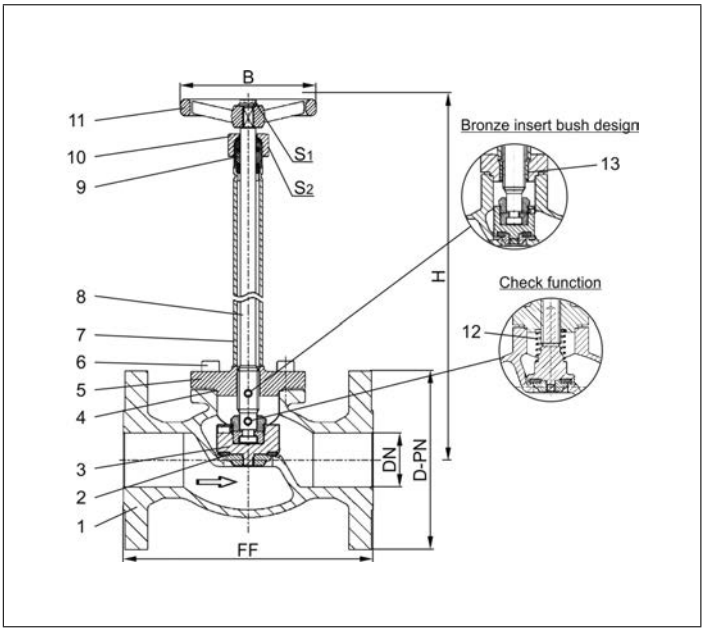

Type 03641 - Standard design	Technical data									
Nominal size	**DN**	**15**	**20**	**25**	**40**	**50**	**65**	**80**	**100**	**150**
Dimension code - Flange EN 1092-1 PN40	.X.	0150	0200	0250	0400	0500	0650	0800	1000	1500
Flange-Ø	D-PN	95	105	115	150	165	185	200	235	300
Face-to-face dimension	FF	140	150	160	200	230	290	310	350	550
Height	H	270 mm or 370 mm							370	420
Handwheel-Ø	B	100	100	100	125	125	200	250	315	360
Wrench size across flats	S_1	7	7	7	10	10	10	10	12	15
Wrench size across flats	S_2	30	30	30	36	36	36	36	41	41
Weight	ca. kg	3.0	3.5	5.0	9.0	13.0	21.0	28.0	42.0	83.0
Kvs-Value	m^3/h	4.3	6.7	11.5	22.6	37.1	71.1	104.0	170.0	350.0
Cv-Value	gal/min	5.0	7.8	13.4	26.3	43.2	82.9	121.3	198.3	408.4

Dimensions in mm. Compliance of tightness requirements acc. to EN 1626 for DN150 up to 20 bar differential pressure. In the range of >20-40 bar, 350-700ml per second (1 bar, 20°C [68°F]) are reached.

Edition 2022-11

Phone: +49 4531 509-0

Fire Safe Valves
Type 03641 - Globe Valve

Cryogenic-Globe and Globe/Check Valves, class 300
“ Fire safe ” type test approval acc. to EN ISO 10497

Stainless steel body and topwork,
“ live loaded ” gland packing
“ cleaned and degreased for oxygen service "

Part No. 03641.X.0013 (H = 270mm)
Part No. 03641.X.0023 (H = 370mm)
Part No. 03641.X.5013 (H = 270mm) Globe/Check Valve
Part No. 03641.X.5023 (H = 370mm) Globe/Check Valve
Flanged connection acc. to ANSI B16.5 class 300

Available options - on request only:
· Extension H up to 900mm
· Valve with control disc (tapered design)

Applications:
Approved for air gases, vapours and cryogenic liquefied gases incl. LNG.
Working temperature: -196°C / -321°F (77K) up to +120°C / +248°F (393K)

Materials		DIN EN	ASTM
1	Body	1.4308	A 351 CF8
2	Valve seal	PTFE / Carbon filled (25%)	
3	Disc	1.4301	A 276 Grade 304
4	Bonnet gasket	Graphite	
5	Headpiece	1.4301 / 1.4308	A 276 Grade 304 / A 351 CF8
6	Bolts	1.4301/A2	A 194 B8
7	Elongation tube	1.4541	A 213 TP 321
8	Stem	1.4301	A 276 Grade 304
9	Gland packing	Graphite / PTFE / MICA	
10	Gland nut	1.4305	A 276 Grade 303
11	Handwheel	1.4409	A 351 CF3M
12	Spring	1.4310	A 313 Grade 301
13	Bush	CW452K	B 159 UNS C51900

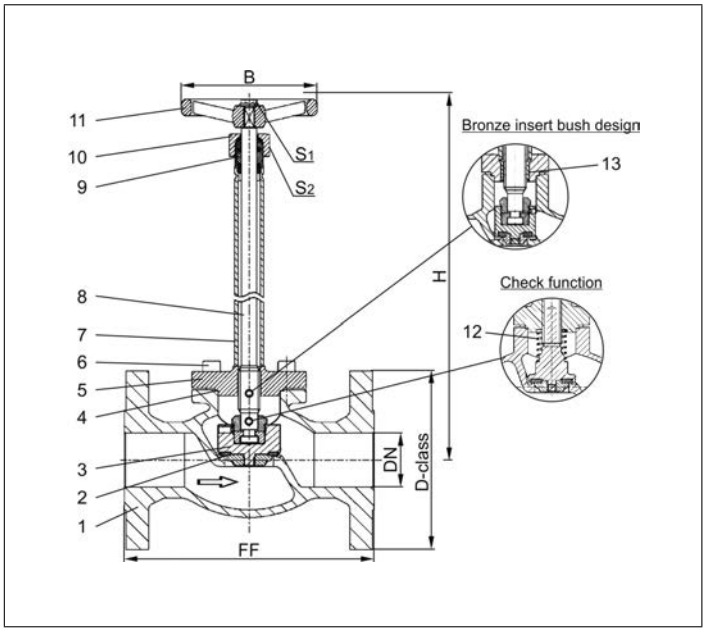

Type 03641 - Standard design	Technical data									
Nominal size	**DN**	**15**	**20**	**25**	**40**	**50**	**65**	**80**	**100**	**150**
Dimension code - Flange ANSI B16.5 class 300	.X.	0400	0600	1000	1400	2000	2400	3000	4000	6000
Flange-Ø	D-class	95	115	125	155	165	190	210	255	320
Face-to-face dimension	FF	140	150	160	200	230	290	310	350	597
Height	H	270 mm or 370 mm							370	420
Handwheel-Ø	B	100	100	100	125	125	200	250	315	360
Wrench size across flats	S_1	7	7	7	10	10	10	10	12	15
Wrench size across flats	S_2	30	30	30	36	36	36	36	41	41
Weight	ca. kg	3.0	3.5	5.0	9.0	13.0	21.0	28.0	42.0	83.0
Kvs-Value	m^3/h	4.3	6.7	11.5	22.6	37.1	71.1	104.0	170.0	350.0
Cv-Value	gal/min	5.0	7.8	13.4	26.3	43.2	82.9	121.3	198.3	408.4

Dimensions in mm. Compliance of tightness requirements acc. to EN 1626 for DN150 up to 20 bar differential pressure. In the range of >20-40 bar, 350-700ml per second (1 bar, 20°C [68°F]) are reached.

Edition 2022-11

Fire Safe Valves
Type 03641 - Globe Valve

Cryogenic-Globe and Globe/Check Valves, class 150
“ Fire safe ” type test approval acc. to EN ISO 10497

Stainless steel body and topwork,
“ live loaded ” gland packing
“ cleaned and degreased for oxygen service "

Part No. 03641.X.0011 (H = 270mm)
Part No. 03641.X.0021 (H = 370mm)
Part No. 03641.X.5011 (H = 270mm) Globe/Check Valve
Part No. 03641.X.5021 (H = 370mm) Globe/Check Valve
Flanged connection acc. to ANSI B16.5 class 150

Available options - on request only:
· Extension H up to 900mm
· Valve with control disc (tapered design)

Applications:
Approved for air gases, vapours and cryogenic liquefied gases incl. LNG.
Working temperature: -196°C / -321°F (77K) up to +120°C / +248°F (393K)

Materials		DIN EN	ASTM
1	Body	1.4308	A 351 CF8
2	Valve seal	PTFE / Carbon filled (25%)	
3	Disc	1.4301	A 276 Grade 304
4	Bonnet gasket	Graphite	
5	Headpiece	1.4301 / 1.4308	A 276 Grade 304 / A 351 CF8
6	Bolts	1.4301/A2	A 194 B8
7	Elongation tube	1.4541	A 213 TP 321
8	Stem	1.4301	A 276 Grade 304
9	Gland packing	Graphite / PTFE / MICA	
10	Gland nut	1.4305	A 276 Grade 303
11	Handwheel	1.4409	A 351 CF3M
12	Spring	1.4310	A 313 Grade 301
13	Bush	CW452K	B 159 UNS C51900

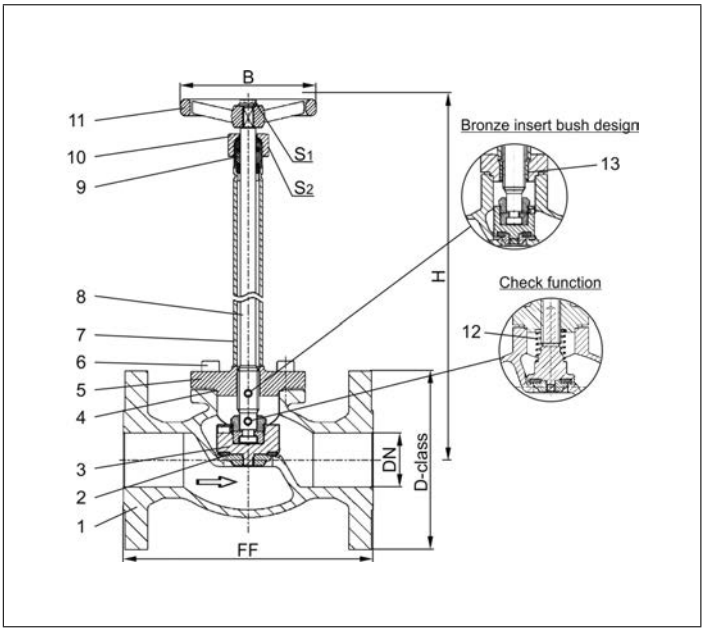

Type 03641 - Standard design	Technical data									
Nominal size	**DN**	**15**	**20**	**25**	**40**	**50**	**65**	**80**	**100**	**150**
Dimension code - Flange ANSI B16.5 class 150	.X.	0400	0600	1000	1400	2000	2400	3000	4000	6000
Flange-Ø	D-class	90	100	110	125	150	180	190	230	280
Face-to-face dimension	FF	140	150	160	200	230	290	310	350	577
Height	H	270 mm or 370 mm							370	420
Handwheel-Ø	B	100	100	100	125	125	200	250	315	360
Wrench size across flats	S_1	7	7	7	10	10	10	10	12	15
Wrench size across flats	S_2	30	30	30	36	36	36	36	41	41
Weight	ca. kg	3.0	3.5	5.0	9.0	13.0	21.0	28.0	42.0	83.0
Kvs-Value	m^3/h	4.3	6.7	11.5	22.6	37.1	71.1	104.0	170.0	350.0
Cv-Value	gal/min	5.0	7.8	13.4	26.3	43.2	82.9	121.3	198.3	408.4

Dimensions in mm. Compliance of tightness requirements acc. to EN 1626 for DN150 up to 20 bar differential pressure. In the range of >20-40 bar, 350-700ml per second (1 bar, 20°C [68°F]) are reached.

Edition 2022-11

Phone: +49 4531 509-0

Fire Safe Valves
Type 03641 - Globe Valve

Cryogenic-Globe and Globe/Check Valves, class 150
“ Fire safe ” type test approval acc. to EN ISO 10497

Stainless steel body and topwork,
“ live loaded ” gland packing

Part No. 03641.8000.0011 (H=560)
Flanged connection acc. to ANSI B16.5 class 150

In flow direction, the valve with the nominal size DN200 is conform to tightness class L1 up to 12 bar maximum differential pressure acc. to DIN 12567 for LNG use.
This standard can also be used for the tightness class of other cryogenic gases.

Available options - on request only

Applications:
Approved for air gases, vapours and cryogenic liquefied gases incl. LNG.
Working temperature: -196°C / -321°F (77K) up to +120°C / +248°F (393K)

Materials		DIN EN	ASTM
1	Body	1.4308	A 351 CF8
1a	Flange	1.4301	A 276 Grade 304
2	Valve seal	PTFE / Carbon filled (25%)	
3	Disc	1.4301	A 276 Grade 304
4	Bonnet gasket	Graphite	
5	Headpiece	1.4301	A 276 Grade 304
6	Bolts	1.4301/A2	A 194 B8
7	Elongation tube	1.4541	A 213 TP 321
8	Stem	1.4301	A 276 Grade 304
9	Gland packing	Graphite / PTFE / MICA	
10	Gland nut	1.4305	A 276 Grade 303
11	Handwheel	1.4571	A 313 Grade 316Ti
12	Spring	1.4310	A 313 Grade 301
13	Bush	CW452K	B 159 UNS C51900

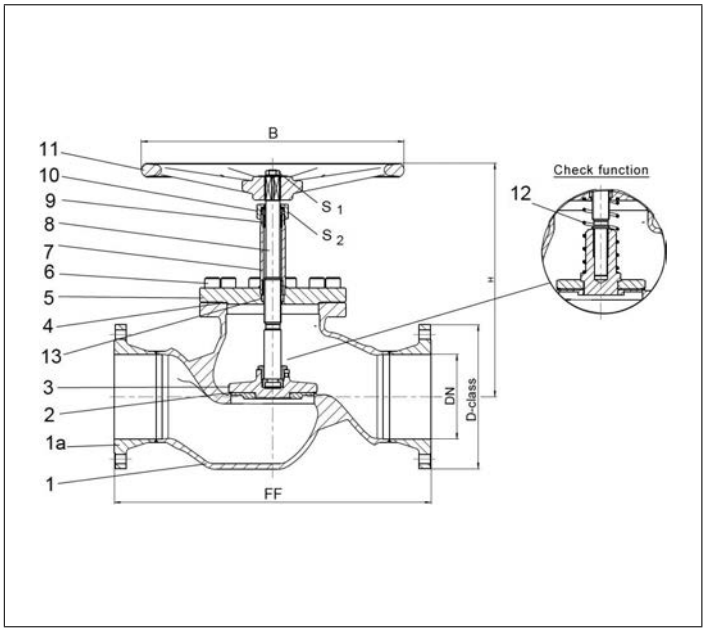

Type 03641 - Standard design	Technical data	
Nominal size	**DN**	**200**
Dimension code	.X.	8000
Flange-Ø	D-class	345
Face-to-face dimension	FF	760
Height	H	560
Handwheel-Ø	B	630
Wrench size across flats	S_1	30
Wrench size across flats	S_2	65
Weight	ca. kg	135
Kvs-Value	m^3/h	680
Cv-Value	gal/min	793

Dimensions in mm.

Edition 2022-11

Fire Safe Valves

Type 01262 - Bellow Sealed Globe Valve

"Fire Safe"-design without fire type-testing according to EN ISO 10497

Cryogenic-Bellow Sealed Globe Valve, PN50
Stainless steel body and topwork,
“ live loaded ” gland packing
“ cleaned and degreased for oxygen service "

Part No. 01262.X.002*
* Butt weld connection for stainless steel pipes acc. to ISO 1127 or ASTM A312
Part No. 01262.X.0024
Socket weld connection for stainless steel pipes acc. to ISO 1127 or ASTM A312

Available options - on request only:
· Welded stainless steel stubs acc. to ISO 1127 or ASTM A312 - length FF + 200mm
· Extension H up to 900mm

Applications:
Approved for air gases, vapours and cryogenic liquefied gases incl. LNG.
Working temperature: -196°C / -321°F (77K) up to +120°C / +248°F (393K)
Leak rate: 10^{-6} mbar ltr / sec outside, 10^{-4} mbar ltr / sec seat

Materials		DIN EN	ASTM
1	Body	1.4308	A 351 CF8
2	Valve seal	PTFE / Carbon filled (25%)	
3	Disc	1.4301	A 276 Grade 304
4	Bonnet gasket	Graphite	
5	Headpiece	1.4301	A 276 Grade 304
6	Bellow stem	1.4571	A 313 Grade 316Ti
7	Bolts	1.4301/A2	A 194 B8
8	Bellow	1.4571	A 313 Grade 316Ti
9	Elongation tube	1.4541	A 213 TP 321
10	Headpiece	1.4301	A 276 Grade 304
11	Bush	CW452K	B 159 UNS C51900
12	Stem	1.4301	A 276 Grade 304
13	Gland packing	Graphite / PTFE / MICA	
14	Gland nut	1.4305	A 276 Grade 303
15	Handwheel	1.4409	A 351 CF3M

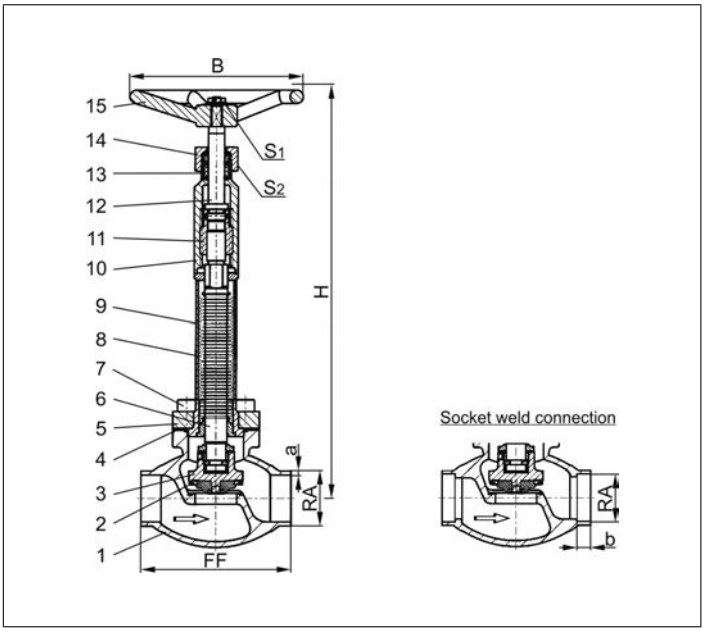

Type 01262 - Standard design	Technical data									
Nominal size	**DN**	**10**	**15**	**15**	**20**	**25**	**32**	**40**	**40**	**50**
Dimension code	.X.	1012	1517	1521	2026	2533	3238	4042	4048	5060
Face-to-face dimension	FF	70	85	85	100	115	115	130	130	155
Height	H	380	380	380	380	380	380	380	380	380
Outside pipe-Ø ISO 1127	RA	12.0	17.2	21.3	26.9	33.7	38.0	42.4	48.3	60.3
Wall thickness pipe ISO 1127	a	1.0	1.6	2.0	2.0	2.0	2.0	2.0	2.0	2.0
Outside pipe-Ø ASTM A312	RA	13.72	17.15	21.34	26.67	33.40	-	42.16	48.26	60.33
Wall thickness pipe ASTM A312	a	dimensions acc. to S10 or S40								
Socket depth	b	6	10	10	13	13	-	13	13	16
Handwheel-Ø	B	150	150	150	150	150	150	150	150	150
Wrench size across flats	S_1	7	7	7	7	7	10	10	10	10
Wrench size across flats	S_2	30	30	30	30	30	36	36	36	36
Weight	ca. kg	1.6	1.85	1.9	2.3	2.7	3.6	5.1	5.1	7.7
Kvs-Value	m^3/h	1.6	2.8	4.3	6.7	11.5	14.0	20.6	22.6	37.1
Cv-Value	gal/min	1.9	3.3	5.0	7.8	13.4	16.2	23.9	26.3	43.2

Dimensions in mm.

Fire Safe Valves
Type 1116F - Globe Valve

Cryogenic-Globe Valves, PN50
“ Fire safe ” type test approval acc. to EN ISO 10497

Stainless steel body and topwork,
Inner parts made of stainless steel
" live loaded " gland packing
" cleaned and degreased for oxygen service "

Available options - on request only:
· Welded stainless steel stubs acc. to ISO 1127 or ASTM A312 - length FF + 200mm
· Extension H up to 900mm
· Valve with control disc (tapered design)
· Disc with PTFE/Carbon filled (25%) seal
· Further connection types

Applications:
Approved for air gases, vapours and cryogenic liquefied gases incl. LNG.
Working temperature: -196°C / -321°F (77K) up to +120°C / +248°F (393K)
Recommended working temperature (for versions without extension):
-60°C / -76°F (213K) up to +120°C / +248°F (393K)

Materials		DIN EN	ASTM
1	Body	1.4308	A 351 CF8
2	Valve seal	PTFE / Carbon filled (25%)	
3	Disc	1.4301	A 479 Grade 304
4	Bonnet gasket	Graphite	
5	Headpiece	1.4308	A 351 CF8
6	Bolts	1.4301/A2	A 320 B8
7	Elongation tube	1.4541	A 213 TP 321
8	Stem	1.4301	A 479 Grade 304
9	Gland packing	Graphite / PTFE / MICA	
10	Gland nut	1.4305	A 276 Grade 303
11	Handwheel	1.4409	A 351 CF3M
12	Spring	1.4310	A 276 Grade 301
13	Bush	1.4541	A 479 Grade 321
14	Sleeve	1.4571	A 276 Grade 316Ti

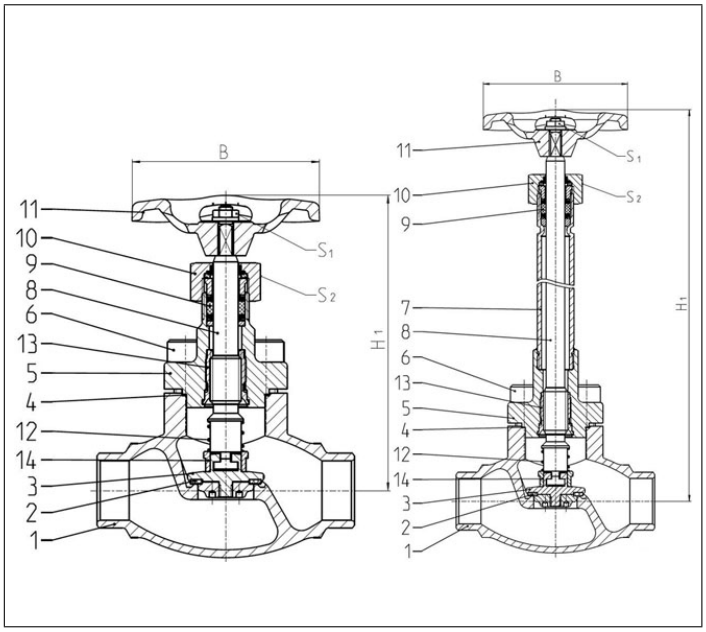

Technical Data - Standard design					
Nominal size [DN]	Height (H) [mm]	Height (H_1) [mm]	Handwheel-Ø (B) [mm]	Wrench size across flats (S_1) [mm]	Wrench size across flats (S_2) [mm]
10	140	270/370	100	7	27
15	140	270/370	100	7	27
20	140	270/370	100	7	27
25	140	270/370	100	7	27
40	175	270/370	125	10	32
50	200	270/370	125	10	32

Fire Safe Valves
Type 1116F - Globe Valve

Connection types

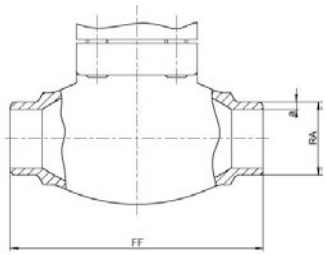

Butt weld connection acc. to
· ISO 1127

DN	Face-to-face dim. (FF) [mm]	Outside pipe-Ø ISO (RA) [mm]	Wall thickness pipe ISO (a) [mm]	Kvs-value [m³/h]	Cv-value [gal/min]	Weight, w.e.* [kg]	Part No.
10	70	13.5	2.3	1.6	1.9	0.85	1116F0135023.X0
15	85	17.2	1.6	3.8	4.4	0.96	1116F0172016.X0
15	85	21.3	2.0	4.3	5.0	0.98	1116F0213020.X0
20	100	26.9	2.0	6.7	7.8	1.43	1116F0269020.X0
25	115	33.7	2.6	11.5	13.4	1.92	1116F0337026.X0
40	130	42.4	2.6	20.6	23.9	3.49	1116F0424026.X0
40	130	48.3	2.6	22.6	26.3	3.36	1116F0483026.X0
50	155	60.3	2.6	37.1	43.2	4.94	1116F0603026.X0

Butt weld connection acc. to
· ASTM A312

DN	Face-to-face dim. (FF) [mm]	Outside pipe-Ø ASTM (RA) [mm]	Wall thickness pipe ASTM (a) [mm]	Kvs-value [m³/h]	Cv-value [gal/min]	Weight, w.e.* [kg]	Part No.
10	70	13.7	2.3	1.6	1.9	0.85	1116F0137S40.X0
15	85	17.1	1.6	3.8	4.4	0.96	1116F0171S10.X0
15	85	21.3	2.1	4.3	5.0	0.98	1116F0213S10.X0
20	100	26.6	2.1	6.7	7.8	1.43	1116F0266S10.X0
25	115	33.4	2.7	11.5	13.4	1.92	1116F0334S10.X0
40	130	42.4	2.7	20.6	23.9	3.49	1116F0424S10.X0
40	130	48.2	2.7	22.6	26.3	3.36	1116F0482S10.X0
50	155	60.3	2.7	37.1	43.2	4.94	1116F0603S10.X0

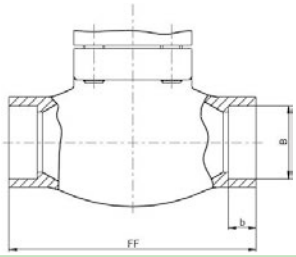

Socket weld connection acc. to
· ISO 1127
· ASTM A312

DN	Face-to-face dim. (FF) [mm]	Socket depth (b) [mm]	Socket diameter (B) [mm]	Kvs-value [m³/h]	Cv-value [gal/min]	Weight, w.e.* [kg]	Part No.
10	70	6.0	14.1	1.6	1.9	0.85	1116F0141000.X0
15	85	8.0	17.5	3.8	4.4	0.96	1116F0175000.X0
15	85	10.0	21.5	4.3	5.0	0.98	1116F0215000.X0
20	100	13.0	27.5	6.7	7.8	1.43	1116F0275000.X0
25	115	13.0	34.1	11.5	13.4	1.92	1116F0341000.X0
40	130	13.0	42.8	20.6	23.9	3.49	1116F0428000.X0
40	130	13.0	48.65	22.6	26.3	3.36	1116F0486000.X0
50	155	16.0	61.1	37.1	43.2	4.94	1116F0611000.X0

* w.e. = without extension
X = 0 (without extension), 1 (with 270mm extension), 2 (with 370mm extension)

Fire Safe Valves
Type 1116F - Globe Valve

Connection types

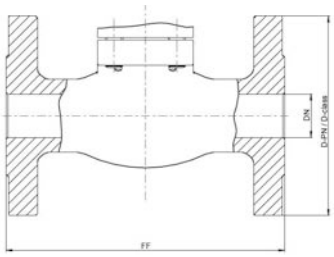

Flanged connection acc. to
· DIN EN 1092-1 PN40
· ANSI B16.5 class 300

DN / NPS	Face-to-face dim. (FF) [mm]	Flange-Ø (D-PN) [mm]	Flange-Ø (D-class) [mm]	Kvs-value [m^3/h]	Cv-value [gal/min]	Weight, w.e.* [kg]	Part No. DIN EN	Part No. ANSI
15 / 1/2"**	161	95	95	4.3	5.0	2.86	1116F015P040.X0	1116F015C300.X0
20 / 3/4"**	181	105	115	6.7	7.8	3.72	1116F020P040.X0	1116F020C300.X0
25 / 1"	160	115	125	11.5	13.4	4.60	1116F025P040.X0	1116F025C300.X0
40 / 1-1/2"	200	150	155	22.6	26.3	8.62	1116F040P040.X0	1116F040C300.X0
50 / 2"	230	165	165	37.1	43.2	12.48	1116F050P040.X0	1116F050C300.X0

** welded version

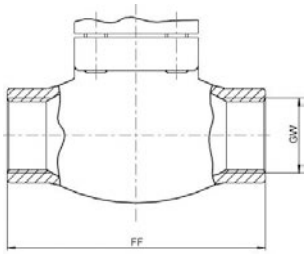

Female thread connection acc. to
· ISO 228/1 (G)
· NPT acc. to ANSI B 1.20.1 (NPT)

DN	Face-to-face dim. (FF) [mm]	Thread size (GW)	Kvs-value [m^3/h]	Cv-value [gal/min]	Weight, w.e.* [kg]	Part No. G-thread	Part No. NPT-thread
10	70	1/4"	1.6	1.9	0.85	1116FFG02000.X0	1116FFN02000.X0
10	70	3/8"	2.2	2.6	0.85	1116FFG03000.X0	1116FFN03000.X0
15	85	1/2"	4.3	5.0	0.98	1116FFG04000.X0	1116FFN04000.X0
20	100	3/4"	6.7	7.8	1.43	1116FFG06000.X0	1116FFN06000.X0
25	115	1"	11.5	13.4	1.92	1116FFG10000.X0	1116FFN10000.X0
40	130	1-1/4"	20.6	23.9	3.49	1116FFG12000.X0	1116FFN12000.X0
40	130	1-1/2"	22.6	26.3	3.36	1116FFG14000.X0	1116FFN14000.X0
50	155	2"	37.1	43.2	4.94	1116FFG20000.X0	1116FFN20000.X0

Female thread connection acc. to
· ISO 7-1 (Rc or Rp)

DN	Face-to-face dim. (FF) [mm]	Thread size (GW)	Kvs-value [m^3/h]	Cv-value [gal/min]	Weight, w.e.* [kg]	Part No. Rc-thread	Part No. Rp-thread
10	70	1/4"	1.6	1.9	0.85	1116FFR02000.X0	1116FFP02000.X0
10	70	3/8"	2.2	2.6	0.85	1116FFR03000.X0	1116FFP03000.X0
15	85	1/2"	4.3	5.0	0.98	1116FFR04000.X0	1116FFP04000.X0
20	100	3/4"	6.7	7.8	1.43	1116FFR06000.X0	1116FFP06000.X0
25	115	1"	11.5	13.4	1.92	1116FFR10000.X0	1116FFP10000.X0
40	130	1-1/4"	20.6	23.9	3.49	1116FFR12000.X0	1116FFP12000.X0
40	130	1-1/2"	22.6	26.3	3.36	1116FFR14000.X0	1116FFP14000.X0
50	155	2"	37.1	43.2	4.94	1116FFR20000.X0	1116FFP20000.X0

* w.e. = without extension
X = 0 (without extension), 1 (with 270mm extension), 2 (with 370mm extension)

Edition 2022-11

Fire Safe Valves

Type 01643 - Actuated Globe Valve

Cryogenic-Globe Valves with Pneumatic Actuator, PN50 (DN65=PN45, DN150=PN40)
“ Fire safe ” type test approval acc. to EN ISO 10497

Stainless steel body and topwork
Actuator - air opens, spring closes
“ live loaded ” gland packing
“ cleaned and degreased for oxygen service " - the actuator is not cleaned and degreased for oxygen

Part No. 01643.X.*01*
* Butt weld connection for stainless steel pipes acc. to ISO 1127 or ASTM A312

Part No. 01643.X.*014
Socket weld connection for stainless steel pipes acc. to ISO 1127 or ASTM A312

Available accessories:
· Solenoid valve · Limit switch
· Electropneumatic positioner etc.

Available options - on request only:
· Welded stainless steel stubs acc. to ISO 1127 or ASTM A312 - length FF + 200mm
· Actuator “ cleaned and degreased for oxygen sevice ”

Applications:
Approved for air gases, vapours and cryogenic liquefied gases incl. LNG.
Working temperature: -196°C / -321°F (77K) up to +120°C / +248°F (393K)

Materials		DIN EN	ASTM
1	Body	1.4308	A 351 CF8
2	Valve seal	PTFE / Carbon filled (25%)	
3	Disc	1.4301	A 276 Grade 304
4	Bonnet gasket	Graphite	
5	Headpiece	1.4301	A 276 Grade 304
6	Bolts	1.4301/A2	A 194 B8
7	Elongation tube	1.4541	A 213 TP 321
8	Stem	1.4301	A 276 Grade 304
9	Gland packing	Graphite / PTFE / MICA	
10	Gland nut	1.4305	A 276 Grade 303
11	Pillars	1.4404	A 276 Grade 316L
12	Bush	CW452K	B 159 UNS C51900

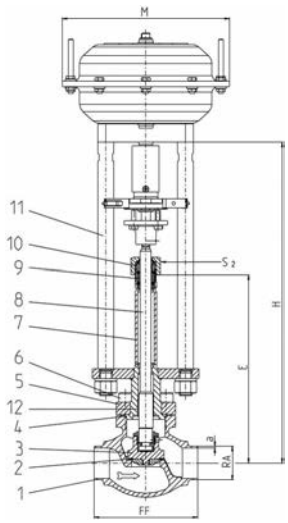

KOREA GAS SAFETY CORPORATION

Type 01643 - Standard design	Technical data													
Nominal size	**DN**	**10**	**15**	**15**	**20**	**25**	**32**	**40**	**40**	**50**	**65**	**80**	**100**	**150**
Dimension code	.X.	1012	1517	1521	2026	2533	3238	4042	4048	5060	657x	8088	0114	0168
Face-to-face dimension	FF	70	85	85	100	115	115	130	130	155	205	245	280	400
Height	H	370	370	370	370	375	405	420	420	425	510	575	635	685
Length	E	195	195	195	200	200	230	230	230	235	300	300	300	300
Outside pipe-Ø ISO 1127	RA	12.0	17.2	21.3	26.9	33.7	38.0	42.4	48.3	60.3	76.1	88.9	114.3	168.3
Wall thickness pipe ISO 1127	a	1.0	1.6	2.0	2.0	2.0	2.0	2.0	2.0	2.0	2.9	3.2	6.0	7.1
Outside pipe-Ø ASTM A312	RA	13.72	17.15	21.34	26.67	33.40	-	42.16	48.26	60.33	73.03	88.90	114.3	168.3
Wall thickness pipe ASTM A312	a	dimensions acc. to S10 or S40												
Socket depth	b	6	10	10	13	13	-	13	13	16	16	16	20	20
Actuator-Ø	M	dependent on actuator												
Wrench size across flats	S_2	30	30	30	30	30	36	36	36	36	36	36	41	41
Weight w/o actuator	ca. kg	1.9	2.15	2.2	2.4	3.1	3.8	6.5	6.5	9.0	15.2	20.0	28.0	60.9
*Kvs-Value	m^3/h	1.6	3.8	4.3	6.7	11.5	14.0	20.6	22.6	37.1	71.1	104.0	170.0	350.0
*Cv-Value	gal/min	1.9	4.4	5.0	7.8	13.4	16.2	23.9	26.3	43.2	82.9	121.3	198.3	408.4
Stroke	mm	10	10	10	7	9	9	11	11	15	23	23	30	40

Dimensions in mm. Compliance of tightness requirements acc. to EN 1626 for DN150 up to 20 bar differential pressure. In the range of >20-40 bar, 350-700ml per second (1 bar, 20°C [68°F]) are reached. * These figures refer to measurements for the flow direction.

Fire Safe Valves

Type 01643 - Actuated Globe Valve

Cryogenic-Globe Valves with Pneumatic Actuator, PN50 (DN150=PN40)
“ Fire safe ” type test approval acc. to EN ISO 10497

Stainless steel body and topwork
Actuator - air opens, spring closes or contrary
" live loaded " gland packing
" cleaned and degreased for oxygen service " - the standard actuator is not cleaned and degreased for oxygen

Part No. 01643.X.0010

possible connections:
· Butt weld connection for stainless steel pipes acc. to ISO 1127 or ASTM A312
· Socket weld connection for stainless steel pipes acc. to ISO 1127 or ASTM A312
· Female thread connection (G) acc. to ISO 228/1 or NPT acc. to ANSI B 1.20.1

Please specify the required connection when ordering!

Available options - on request only:
· Solenoid valves · Electropneumatic positioner · Inductive Proximity Switches
· Position and Limit Switches · Air control sets · Electric actuator
· Welded stainless steel stubs acc. to ISO 1127 or ASTM A312 - length FF + 200mm
· Actuator " cleaned and degreased for oxygen service " · Further pipe wall thicknesses
· Valve with check disc · valve with control disc (tapered design)

Applications:

Approved for air gases, vapours and cryogenic liquefied gases incl. LNG.
Working temperature: -196°C / -321°F (77K) up to +120°C / +248°F (393K)

Materials		DIN EN	ASTM
1	Body	1.4308	A 351 CF8
2	Valve seal	PTFE / Carbon filled (25%)	
3	Disc	1.4301	A 276 Grade 304
4	Bonnet Gasket	Graphite	
5	Headpiece	1.4301	A 276 Grade 304
6	Bolts	1.4301/A2	A 194 B8
7	Elongation tube	1.4541	A 213 TP 321
8	Stem	1.4301	A 276 Grade 304
9	Gland packing	Graphite / PTFE / MICA	
10	Gland nut	1.4305	A 276 Grade 303
11	Pillars	1.4404	A 276 Grade 316L
12	Bush	CW452K	B 159 UNS C51900

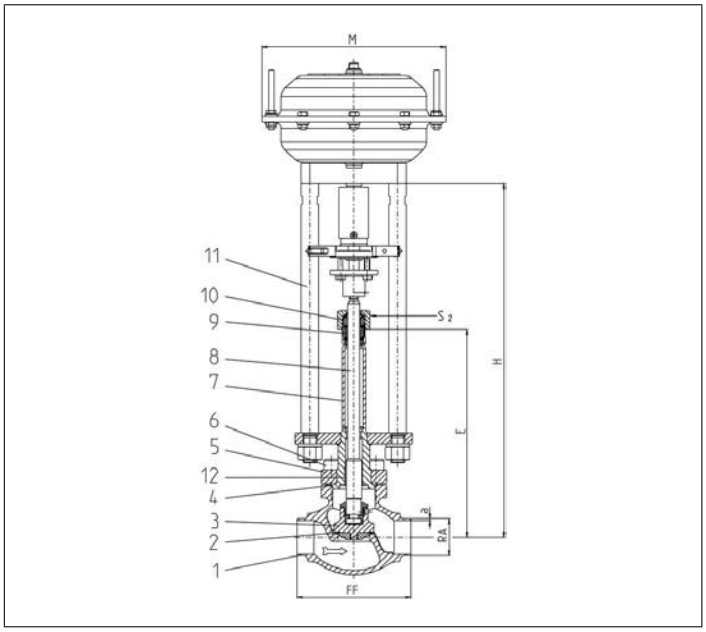

KOREA GAS SAFETY CORPORATION

Type 01643 - Standard design	Technical Data											
Nominal size	**DN**	**10**	**15**	**20**	**25**	**32**	**40**	**50**	**65**	**80**	**100**	**150**
Dimension code	.X.	0100	0150	0200	0250	0320	0400	0500	0650	0800	1000	1500
Face-to-face dimension	FF	70	85	100	115	115	130	155	205	245	280	400
Height	H	370	370	370	375	405	420	425	510	575	635	685
Length	E	195	195	200	200	230	230	235	300	300	300	350
Actuator-Ø	M	dependent on actuator										
Wrench size across flats	S_2	30	30	30	30	36	36	36	36	36	41	41
Weight w/o actuator	ca. kg	1.9	2.15	2.4	3.1	3.8	6.5	9.0	15.2	20.0	28.0	60.9
Stroke	mm	10	10	7	9	9	11	15	23	23	30	40

Dimensions in mm. Compliance of tightness requirements acc. to EN 1626 for DN150 up to 20 bar differential pressure. In the range of >20-40 bar, 350-700ml per second (1 bar, 20°C [68°F]) are reached. * These figures refer to measurements for the flow direction.

Edition 2022-11

Fire Safe Valves

Type 01643 - Actuated Globe Valve

Connection types

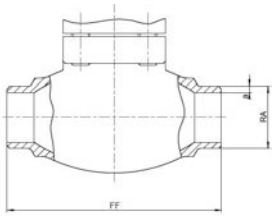

Butt weld connection acc. to
· ISO 1127

DN	Face-to-face dim. (FF) [mm]	Outside pipe-Ø ISO (RA) [mm]	Wall thickness pipe ISO (a) [mm]	*Kvs-value [m³/h]	*Cv-value [gal/min]	**Weight w.a. [kg]	Order reference
10	70	13.5	1.0	1.6	1.9	1.9	BW 13.5x1.0
15	85	17.2	1.6	3.8	4.4	2.2	BW 17.2x1.6
15	85	21.3	2.0	4.3	5.0	2.2	BW 21.3x2.0
20	100	26.9	2.0	6.7	7.8	2.4	BW 26.9x2.0
25	115	33.7	2.0	11.5	13.4	3.1	BW 33.7x2.0
32	115	38.0	2.0	14.0	16.2	3.8	BW 38.0x2.0
40	130	42.4	2.0	20.6	23.9	6.5	BW 42.4x2.0
40	130	48.3	2.0	22.6	26.3	6.5	BW 48.3x2.0
50	155	60.3	2.0	37.1	43.2	9.0	BW 60.3x2.0
65	205	76.1	2.6	71.1	82.9	15.2	BW 76.1x2.6
80	245	88.9	3.2	104.0	121.3	20.0	BW 88.9x3.2
100	280	114.3	6.0	170.0	198.3	28.0	BW 114.3x6.0
150	400	168.3	7.1	350.0	408.4	60.9	BW 168.3x7.1

Butt weld connection acc. to
· ASTM A312

DN	Face-to-face dim. (FF) [mm]	Outside pipe-Ø ASTM (RA) [inch / mm]	Wall thickness pipe ASTM (a) [mm]	*Kvs-value [m³/h]	*Cv-value [gal/min]	**Weight w.a. [kg]	Order reference
10	70	1/4" / 13.72	1.65	1.6	1.9	1.9	BW 13.72x1.65
15	85	1/2" / 17.15	1.65	3.8	4.4	2.2	BW 17.15x1.65
15	85	1/2" / 21.34	2.11	4.3	5.0	2.2	BW 21.34x2.11
20	100	3/4" / 26.67	2.11	6.7	7.8	2.4	BW 26.67x2.11
25	115	1" / 33.40	2.77	11.5	13.4	3.1	BW 33.40x2.77
40	130	1-1/2" / 42.16	2.77	20.6	23.9	6.5	BW 42.16x2.77
40	130	1-1/2" / 48.26	2.77	22.6	26.3	6.5	BW 48.26x2.77
50	155	2" / 60.32	2.77	37.1	43.2	9.0	BW 60.32x2.77
65	205	2-1/2" / 73.02	3.05	71.1	82.9	15.2	BW 73.02x3.05
80	245	3" / 88.90	3.05	104.0	121.3	20.0	BW 88.90x3.05
100	280	4" / 114.30	3.05	170.0	198.3	28.0	BW 114.30x3.05
150	400	6" / 168.27	3.40	350.0	408.4	60.9	BW 168.27x3.40
10	70	1/4" / 13.72	2.24	1.6	1.9	1.9	BW 13.72x2.24
15	85	1/2" / 17.15	2.31	3.8	4.4	2.2	BW 17.15x2.31
15	85	1/2" / 21.34	2.77	4.3	5.0	2.2	BW 21.34x2.77
20	100	3/4" / 26.67	2.87	6.7	7.8	2.4	BW 26.67x2.87
25	115	1" / 33.40	3.38	11.5	13.4	3.1	BW 33.40x3.38
40	130	1-1/2" / 42.16	3.56	20.6	23.9	6.5	BW 42.16x3.56
40	130	1-1/2" / 48.26	3.68	22.6	26.3	6.5	BW 48.26x3.68
50	155	2" / 60.32	3.91	37.1	43.2	9.0	BW 60.32x3.91
65	205	2-1/2" / 73.02	5.16	71.1	82.9	15.2	BW 73.02x5.16
80	245	3" / 88.90	5.49	104.0	121.3	20.0	BW 88.90x5.49
100	280	4" / 114.30	6.02	170.0	198.3	28.0	BW 114.30x6.02
150	400	6" / 168.27	7.11	350.0	408.4	60.9	BW 168.27x7.11

* These figures refer to measurements for the flow direction.
** w.a. = without actuator

Fire Safe Valves

Type 01643 - Actuated Globe Valve

Connection types

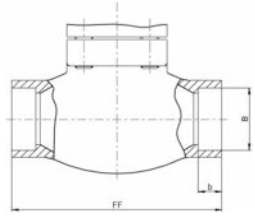

Socket weld connection acc. to
· ISO 1127
· ASTM A312

DN	Face-to-face dim. (FF) [mm]	Socket depth (b) [mm]	Socket diameter (B) [mm]	*Kvs-value [m^3/h]	*Cv-value [gal/min]	**Weight, w.a. [kg]	order reference [ØISO / ØASTM]
10	70	6	14.1	1.6	1.9	1.9	SW 13.5 / 13.72
15	85	10	17.5	3.8	4.4	2.2	SW 17.2 / 17.15
15	85	10	21.5	4.3	5.0	2.2	SW 21.3 / 21.34
20	100	13	27.5	6.7	7.8	2.4	SW 26.9 / 26.67
25	115	13	34.1	11.5	13.4	3.1	SW 33.7 / 33.4
40	130	13	42.8	20.6	23.9	6.5	SW 42.4 / 42.16
40	130	13	48.6	22.6	26.3	6.5	SW 48.3 / 48.26
50	155	16	61.1	37.1	43.2	9.0	SW 60.3 / 60.32
65	205	16	74.0	71.1	82.9	15.1	SW 73.02
65	205	16	76.8	71.1	82.9	15.2	SW 76.1
80	245	16	90.0	104.0	121.3	20.0	SW 88.9
100	280	20	114.8	170.0	198.3	28.0	SW 114.3
150	400	20	168.2	350.0	408.4	60.9	SW 168.3 / 168.27

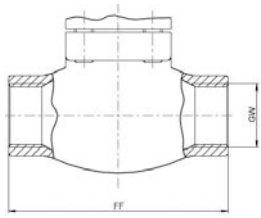

Female thread connection acc. to
· ISO 228/1 (G)
· NPT acc. to ANSI B 1.20.1 (NPT)

DN	Face-to-face dim. (FF) [mm]	Thread size (GW)	*Kvs-value [m^3/h]	*Cv-value [gal/min]	**Weight, w.a. [kg]	order reference G-Thread	order reference NPT-Thread
10	70	1/4"	1.6	1.9	1.9	1/4 BSPP	1/4" NPT
10	70	3/8"	2.2	2.6	1.9	3/8 BSPP	3/8" NPT
15	85	1/2"	4.3	5.0	2.2	1/2 BSPP	1/2" NPT
20	100	3/4"	6.7	7.8	2.4	3/4 BSPP	3/4" NPT
25	115	1"	11.5	13.4	3.1	1 BSPP	1" NPT
40	130	1-1/4"	20.6	23.9	6.5	1-1/4 BSPP	1-1/4" NPT
40	130	1-1/2"	22.6	26.3	6.5	1-1/2 BSPP	1-1/2" NPT
50	155	2"	37.1	43.2	9.0	2 BSPP	2" NPT

* These figures refer to measurements for the flow direction.
** w.a. = withour actuator

Edition 2022-11

Fire Safe Valves

Type 01643 - Actuated Globe Valve

Cryogenic-Globe Valves with Pneumatic Actuator, PN20/25
“ Fire safe ” type test approval acc. to EN ISO 10497

Stainless steel body and topwork
Actuator - air opens, spring closes or contrary
" live loaded " gland packing

Part No. 01643.0219.*01*
Butt weld connection for stainless steel pipes acc. to ISO 1127 or ASTM A312
Part No. 01643.0219.*014
Socket weld connection for stainless steel pipes acc. to ISO 1127 or ASTM A312

In flow direction, the valve with the nominal size DN200 is conform to tightness class L1 up to 18 bar maximum differential pressure acc. to DIN 12567 for LNG use.
This standard can also be used for the tightness class of other cryogenic gases.

Available accessories/options - on request only:
· Solenoid valve · Limit switch · Electropneumatic positioner etc.
· Welded stainless steel stubs acc. to ISO 1127 or ASTM A312
· Actuator " cleaned and degreased for oxygen service "
· Valve with check or control disc (tapered design)

Applications:
Approved for air gases, vapours and cryogenic liquefied gases incl. LNG.
Working temperature: -196°C / -321°F (77K) up to +120°C / +248°F (393K)

Materials		DIN EN	ASTM
1	Body	1.4308	A 351 CF8
2	Valve seal	PTFE / Carbon filled (25%)	
3	Disc	1.4301	A 276 Grade 304
4	Bonnet gasket	Graphite	
5	Headpiece	1.4301	A 276 Grade 304
6	Bolts	1.4301/A2	A 194 B8
7	Elongation tube	1.4541	A 213 TP 321
8	Stem	1.4301	A 276 Grade 304
9	Gland packing	Graphite / PTFE / MICA	
10	Gland nut	1.4305	A 276 Grade 303
11	Pillars	1.4404	A 276 Grade 316L
12	Bush	CW452K	B 159 UNS C51900

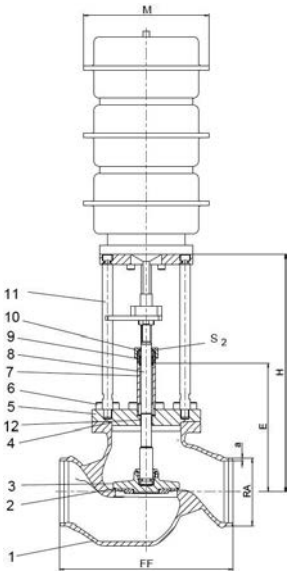

KOREA GAS SAFETY CORPORATION

Type 01643 - Standard design	Technical data	
Nominal size	**DN**	**200**
Face-to-face dimension	FF	560
Height	H	785
Length	E	410
Outside pipe-Ø ISO 1127	RA	219.1
Wall thickness pipe ISO 1127	a	6.3
Outside pipe-Ø ASTM A312	RA	219.1
Wall thickness pipe ASTM A312	a	dimensions acc. to S10 or S40
Socket depth	b	15
Actuator-Ø	M	depent on actuator
Wrench size across flats	S_2	65
Weight w/o actuator	ca. kg	165.0
*Kvs-Value	m^3/h	680.0
*Cv-Value	gal/min	793.0
Stroke	mm	60

Dimensions in mm. * These figures refer to measurements for the flow direction.

Fire Safe Valves

Type 03643 - Actuated Globe Valve

Cryogenic-Globe Valves with Pneumatic Actuator, PN16
“ Fire safe ” type test approval acc. to EN ISO 10497

Stainless steel body and topwork
Actuator - air opens, spring closes or contrary
" live loaded " gland packing
" cleaned and degreased for oxygen service " - the actuator is not cleaned and degreased for oxygen

Part No. 03643.X.*014
Flanged connection acc. to DIN EN 1092-1 PN16

Available accessories:
· Solenoid valve
· Limit switch
· Electropneumatic positioner etc.

Available options - on request only:
· Actuator - " cleaned and degreased for oxygen service "
· Electric actuator
· Valve with check disc
· Valve with control disc (tapered design)

Applications:
Approved for air gases, vapours and cryogenic liquefied gases incl. LNG.
Working temperature: -196°C / -321°F (77K) up to +120°C / +248°F (393K)

Materials		DIN EN	ASTM
1	Body	1.4308	A 351 CF8
2	Valve seal	PTFE / Carbon filled (25%)	
3	Disc	1.4301	A 276 Grade 304
4	Bonnet gasket	Graphite	
5	Headpiece	1.4301	A 276 Grade 304
6	Bolts	1.4301/A2	A 194 B8
7	Elongation tube	1.4541	A 213 TP 321
8	Stem	1.4301	A 276 Grade 304
9	Gland packing	Graphite / PTFE / MICA	
10	Gland nut	1.4305	A 276 Grade 303
11	Pillars	1.4404	A 276 Grade 316L
12	Bush	CW452K	B 159 UNS C51900

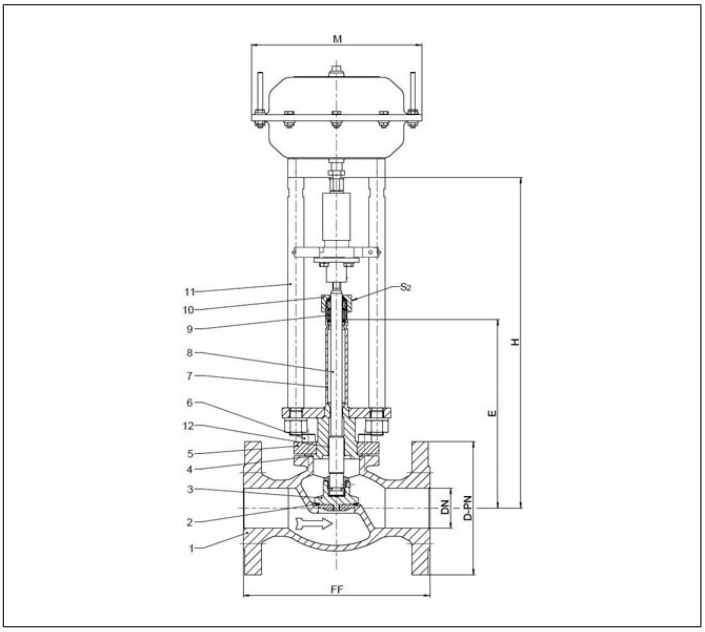

KOREA GAS SAFETY CORPORATION

Type 03643 - Standard design	Technical data									
Nominal size	**DN**	**15**	**20**	**25**	**40**	**50**	**65**	**80**	**100**	**150**
Dimension code - Flange EN 1092-1 PN16	.X.	0150	0200	0250	0400	0500	0650	0800	1000	1500
Flange-Ø	D-PN	95	105	115	150	165	185	200	220	285
Face-to-face dimension	FF	140	150	160	200	230	295	310	350	510
Height	H	370	370	375	420	425	510	575	635	685
Length	E	195	200	200	230	235	300	300	300	350
Actuator-Ø	M	dependent on actuator								
Wrench size across flats	S_2	30	30	30	36	36	36	36	41	41
Weight w/o actuator	ca. kg	4.6	6.5	8.5	12.0	16.0	30.0	36.0	53.0	87.0
*Kvs - Value	m^3/h	4.3	6.7	11.5	22.6	37.1	71.1	104.0	170.0	350.0
*Cv - Value	gal/min	5.0	7.8	13.4	26.3	43.2	82.9	121.3	198.3	408.4
Stroke	mm	10	7	9	11	15	23	23	30	40

Dimensions in mm. Compliance of tightness requirements acc. to EN 1626 for DN150 up to 20 bar differential pressure. In the range of >20-40 bar, 350-700ml per second (1 bar, 20°C [68°F]) are reached. * These figures refer to measurements for the flow direction.

Edition 2022-11

Fire Safe Valves

Type 03643 - Actuated Globe Valve

Cryogenic-Globe Valves with Pneumatic Actuator, PN40
“ Fire safe ” type test approval acc. to EN ISO 10497

Stainless steel body and topwork
Actuator - air opens, spring closes or contrary
" live loaded " gland packing
" cleaned and degreased for oxygen service " - the actuator is not cleaned and degreased for oxygen

Part No. 03643.X.*012
Flanged connection acc. to DIN EN 1092-1 PN40

Available accessories:
· Solenoid valve
· Limit switch
· Electropneumatic positioner etc.

Available options - on request only:
· Actuator - " cleaned and degreased for oxygen service "
· Electric actuator
· Valve with check disc
· Valve with control disc (tapered design)

Applications:
Approved for air gases, vapours and cryogenic liquefied gases incl. LNG.
Working temperature: -196°C / -321°F (77K) up to +120°C / +248°F (393K)

Materials		DIN EN	ASTM
1	Body	1.4308	A 351 CF8
2	Valve seal	PTFE / Carbon filled (25%)	
3	Disc	1.4301	A 276 Grade 304
4	Bonnet gasket	Graphite	
5	Headpiece	1.4301	A 276 Grade 304
6	Bolts	1.4301/A2	A 194 B8
7	Elongation tube	1.4541	A 213 TP 321
8	Stem	1.4301	A 276 Grade 304
9	Gland packing	Graphite / PTFE / MICA	
10	Gland nut	1.4305	A 276 Grade 303
11	Pillars	1.4404	A 276 Grade 316L
12	Bush	CW452K	B 159 UNS C51900

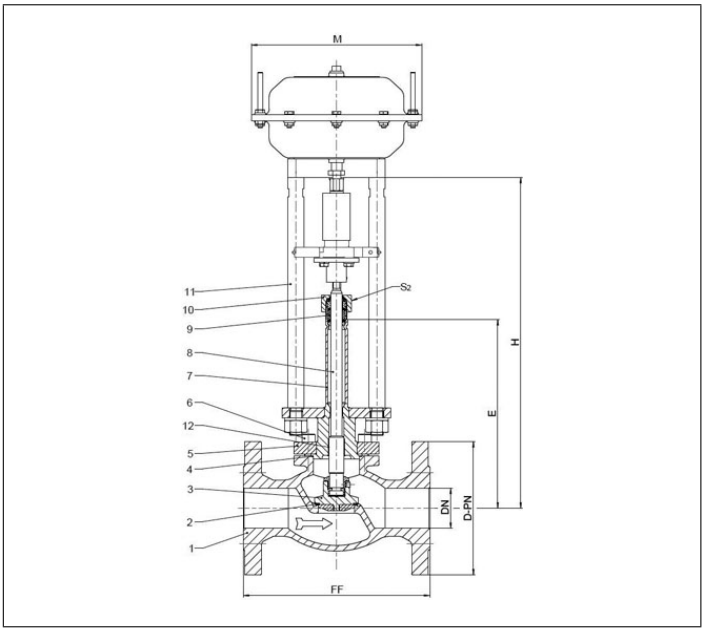

KOREA GAS SAFETY CORPORATION

Type 03643 - Standard design	Technical data									
Nominal size	**DN**	**15**	**20**	**25**	**40**	**50**	**65**	**80**	**100**	**150**
Dimension code - Flange EN 1092-1 PN40	.X.	0150	0200	0250	0400	0500	0650	0800	1000	1500
Flange-Ø	D-PN	95	105	115	150	165	185	200	235	300
Face-to-face dimension	FF	140	150	160	200	230	290	310	350	550
Height	H	370	370	375	420	425	510	575	635	685
Length	E	195	200	200	230	235	300	300	300	350
Actuator-Ø	M	dependent on actuator								
Wrench size across flats	S_2	30	30	30	36	36	36	36	41	41
Weight w/o actuator	ca. kg	4.6	6.5	8.5	12.0	16.0	30.0	36.0	53.0	100.0
*Kvs - Value	m^3/h	4.3	6.7	11.5	22.6	37.1	71.1	104.0	170.0	350.0
*Cv - Value	gal/min	5.0	7.8	13.4	26.3	43.2	82.9	121.3	198.3	408.4
Stroke	mm	10	7	9	11	15	23	23	30	40

Dimensions in mm. Compliance of tightness requirements acc. to EN 1626 for DN150 up to 20 bar differential pressure. In the range of >20-40 bar, 350-700ml per second (1 bar, 20°C [68°F]) are reached. * These figures refer to measurements for the flow direction.

Fire Safe Valves

Type 03643 - Actuated Globe Valve

Cryogenic-Globe Valves with Pneumatic Actuator, class 300
“ Fire safe ” type test approval acc. to EN ISO 10497

Stainless steel body and topwork
Actuator - air opens, spring closes or contrary
" live loaded " gland packing
" cleaned and degreased for oxygen service " - the actuator is not cleaned and degreased for oxygen

Part No. 03643.X.*013
Flanged connection acc. to ANSI B16.5 class 300

Available accessories:
· Solenoid valve
· Limit switch
· Electropneumatic positioner etc.

Available options - on request only:
· Actuator - " cleaned and degreased for oxygen service "
· Electric actuator
· Valve with check disc
· Valve with control disc (tapered design)

Applications:
Approved for air gases, vapours and cryogenic liquefied gases incl. LNG.
Working temperature: -196°C / -321°F (77K) up to +120°C / +248°F (393K)

Materials		DIN EN	ASTM
1	Body	1.4308	A 351 CF8
2	Valve seal	PTFE / Carbon filled (25%)	
3	Disc	1.4301	A 276 Grade 304
4	Bonnet gasket	Graphite	
5	Headpiece	1.4301	A 276 Grade 304
6	Bolts	1.4301/A2	A 194 B8
7	Elongation tube	1.4541	A 213 TP 321
8	Stem	1.4301	A 276 Grade 304
9	Gland packing	Graphite / PTFE / MICA	
10	Gland nut	1.4305	A 276 Grade 303
11	Pillars	1.4404	A 276 Grade 316L
12	Bush	CW452K	B 159 UNS C51900

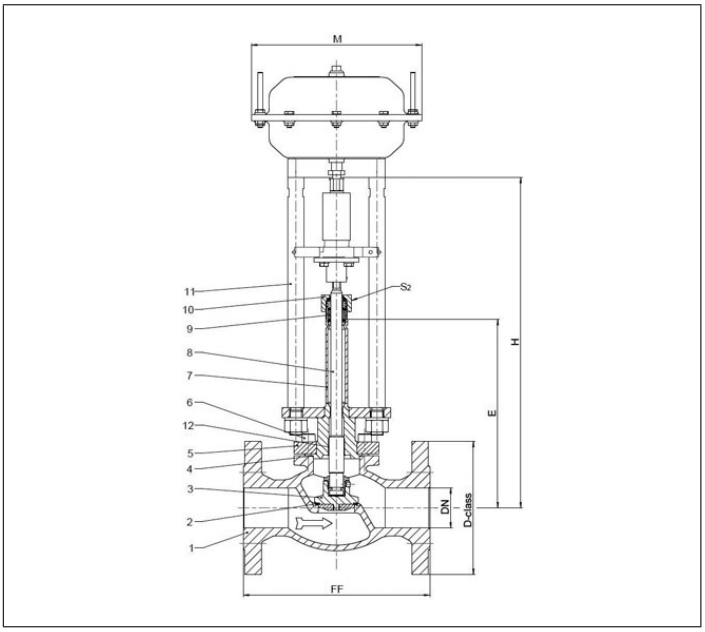

KOREA GAS SAFETY CORPORATION

Type 03643 - Standard design	Technical data									
Nominal size	**DN**	**15**	**20**	**25**	**40**	**50**	**65**	**80**	**100**	**150**
Dimension code - Flange ANSI B16.5 class 300	.X.	0400	0600	1000	1400	2000	2400	3000	4000	6000
Flange-Ø	D-class	95	115	125	155	165	190	210	255	320
Face-to-face dimension	FF	140	150	160	200	230	290	310	350	597
Height	H	370	370	375	420	425	510	575	635	685
Length	E	195	200	200	230	235	300	300	300	300
Actuator-Ø	M	dependent on actuator								
Wrench size across flats	S_2	30	30	30	36	36	36	36	41	41
Weight w/o actuator	ca. kg	4.6	6.5	8.5	12.0	16.0	30.0	36.0	53.0	100.0
*Kvs - Value	m^3/h	4.3	6.7	11.5	22.6	37.1	71.1	104.0	170.0	350.0
*Cv - Value	gal/min	5.0	7.8	13.4	26.3	43.2	82.9	121.3	198.3	408.4
Stroke	mm	10	7	9	11	15	23	23	30	40

Dimensions in mm. Compliance of tightness requirements acc. to EN 1626 for DN150 up to 20 bar differential pressure. In the range of >20-40 bar, 350-700ml per second (1 bar, 20°C [68°F]) are reached. * These figures refer to measurements for the flow direction.

Edition 2022-11

Fire Safe Valves

Type 03643 - Actuated Globe Valve

Cryogenic-Globe Valves with Pneumatic Actuator, class 150
“ Fire safe ” type test approval acc. to EN ISO 10497

Stainless steel body and topwork
Actuator - air opens, spring closes or contrary
" live loaded " gland packing
" cleaned and degreased for oxygen service " - the actuator is not cleaned and degreased for oxygen

Part No. 03643.X.*011
Flanged connection acc. to ANSI B16.5 class 150

Available accessories:
· Solenoid valve
· Limit switch
· Electropneumatic positioner etc.

Available options - on request only:
· Actuator - " cleaned and degreased for oxygen service "
· Electric actuator
· Valve with check disc
· Valve with control disc (tapered design)

Applications:
Approved for air gases, vapours and cryogenic liquefied gases incl. LNG.
Working temperature: -196°C / -321°F (77K) up to +120°C / +248°F (393K)

Materials		DIN EN	ASTM
1	Body	1.4308	A 351 CF8
2	Valve seal	PTFE / Carbon filled (25%)	
3	Disc	1.4301	A 276 Grade 304
4	Bonnet gasket	Graphite	
5	Headpiece	1.4301	A 276 Grade 304
6	Bolts	1.4301/A2	A 194 B8
7	Elongation tube	1.4541	A 213 TP 321
8	Stem	1.4301	A 276 Grade 304
9	Gland packing	Graphite / PTFE / MICA	
10	Gland nut	1.4305	A 276 Grade 303
11	Pillars	1.4404	A 276 Grade 316L
12	Bush	CW452K	B 159 UNS C51900

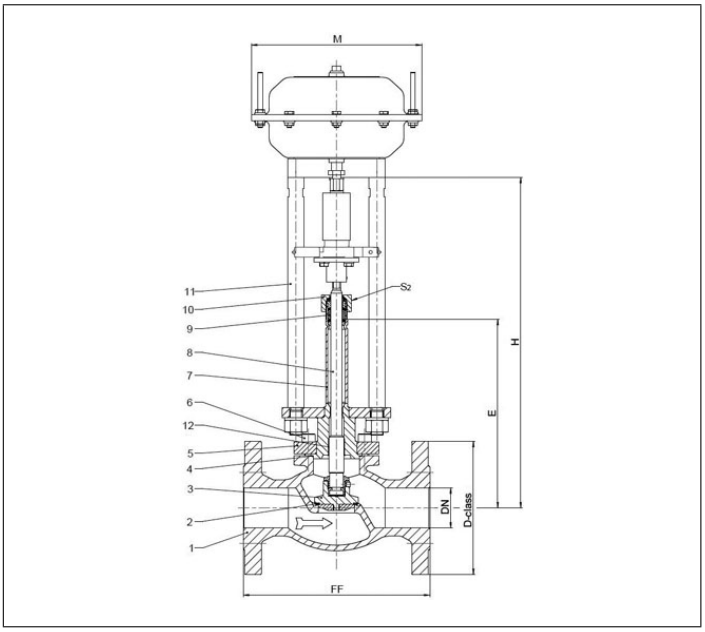

KOREA GAS SAFETY CORPORATION

Type 03643 - Standard design	Technical data									
Nominal size	**DN**	**15**	**20**	**25**	**40**	**50**	**65**	**80**	**100**	**150**
Dimension code - Flange ANSI B16.5 class 150	.X.	0400	0600	1000	1400	2000	2400	3000	4000	6000
Flange-Ø	D-class	90	100	110	125	150	180	190	230	280
Face-to-face dimension	FF	140	150	160	200	230	290	310	350	577
Height	H	370	370	375	420	425	510	575	635	685
Length	E	195	200	200	230	235	300	300	300	300
Actuator-Ø	M	dependent on actuator								
Wrench size across flats	S_2	30	30	30	36	36	36	36	41	41
Weight w/o actuator	ca. kg	4.6	6.5	8.5	12.0	16.0	30.0	36.0	53.0	87.0
*Kvs - Value	m^3/h	4.3	6.7	11.5	22.6	37.1	71.1	104.0	170.0	350.0
*Cv - Value	gal/min	5.0	7.8	13.4	26.3	43.2	82.9	121.3	198.3	408.4
Stroke	mm	10	7	9	11	15	23	23	30	40

Dimensions in mm. Compliance of tightness requirements acc. to EN 1626 for DN150 up to 20 bar differential pressure. In the range of >20-40 bar, 350-700ml per second (1 bar, 20°C [68°F]) are reached. * These figures refer to measurements for the flow direction.

Fire Safe Valves

Type 03643 - Actuated Globe Valve

Cryogenic-Globe Valves with Pneumatic Actuator, PN25
“ Fire safe ” type test approval acc. to EN ISO 10497

Stainless steel body and topwork
Actuator - air opens, spring closes or contrary
" live loaded " gland packing

Artikel-Nr. 03643.8000.X
Flanschanschluss nach ANSI B16.5 class 150

In flow direction, the valve with the nominal size DN200 is conform to tightness class L1 up to 18 bar maximum differential pressure acc. to DIN 12567 for LNG use.
This standard can also be used for the tightness class of other cryogenic gases.

Available accessories:
· Solenoid valve
· Limit switch
· Electropneumatic positioner etc.
Available options - on request only:
· Actuator - " cleaned and degreased for oxygen service "
· Electric actuator
· Valve with check or control disc (tapered design)

Applications:
Approved for air gases, vapours and cryogenic liquefied gases incl. LNG.
Working temperature: -196°C / -321°F (77K) up to +120°C / +248°F (393K)

Materials		DIN EN	ASTM
1	Body	1.4308	A 351 CF8
1a	Flange	1.4301	A 276 Grade 304
2	Valve seal	PTFE / Carbon filled (25%)	
3	Disc	1.4301	A 276 Grade 304
4	Bonnet gasket	Graphite	
5	Headpiece	1.4301	A 276 Grade 304
6	Bolts	1.4301/A2	A 194 B8
7	Elongation tube	1.4541	A 213 TP 321
8	Stem	1.4301	A 276 Grade 304
9	Gland packing	Graphite / PTFE / MICA	
10	Gland nut	1.4305	A 276 Grade 303
11	Pillars	1.4404	A 276 Grade 316L
12	Bush	CW452K	B 159 UNS C51900

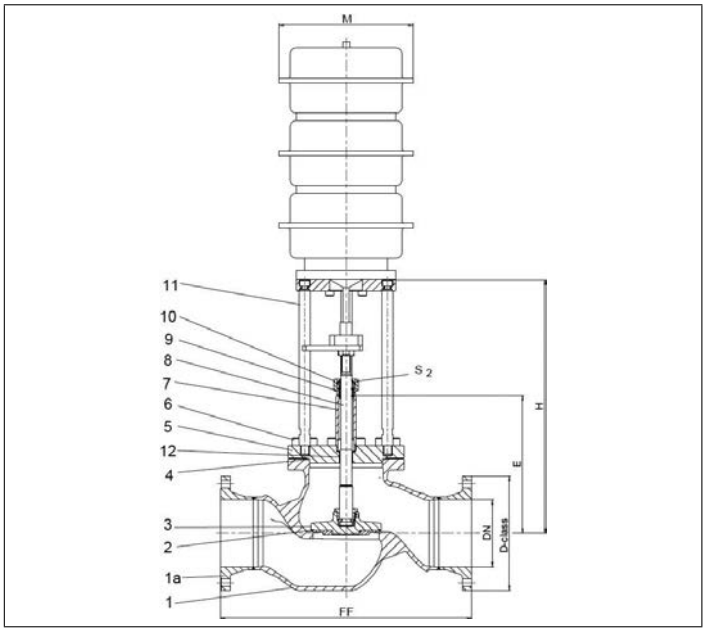

KOREA GAS SAFETY CORPORATION

Type 03643 - Standard design	Technical data	
Nominal size	**DN**	**200**
Dimension code	.X.	8000
Flange-Ø	D-class	345
Face-to-face dimension	FF	760
Height	H	785
Length	E	410
Actuator-Ø	M	dependent on actuator
Wrench size across flats	S_2	30
Weight w/o actuator	ca. kg	135
*Kvs-Value	m^3/h	680
*Cv-Value	gal/min	793
Stroke	mm	60

Dimensions in mm. * These figures refer to measurements for the flow direction.

Edition 2022-11

Fire Safe Valves

Type 01653 - Actuated Trailervalve

Cryogenic-Globe Valves with Pneumatic Actuator, PN50 (DN65=PN45)
“ Fire safe ” type test approval acc. to EN ISO 10497

air pressure for operation 6.0 bar g (maximum 10.0 bar g), push-in connection 8mm
Stainless steel body and topwork,
Actuator - air opens, spring closes
“ live loaded ” gland packing
“ cleaned and degreased for oxygen service " - the actuator is not cleaned and degreased for oxygen
maximum working pressure of the valve depending on nominal size

Part No. 01653.X.T0**
* Butt weld connection for stainless steel pipes acc. to ISO 1127 or ASTM A312
Part No. 01653.X.T0*4
Socket weld connection for stainless steel pipes acc. to ISO 1127 or ASTM A312

Available options - on request only:
· Welded stainless steel stubs acc. to ISO 1127 or ASTM A312 - length FF + 200mm
· Weather protection hood

Applications:
Approved for air gases, vapours and cryogenic liquefied gases incl. LNG.
Working temperature: -196°C / -321°F (77K) up to +120°C / +248°F (393K)
Ambient temperature actuator: -50°C / -58°F (223K) up to +70°C / +158°F (343K)

Materials		DIN EN	ASTM
1	Body	1.4308	A 351 CF8
2	Valve seal	PTFE / Carbon filled (25%)	
3	Disc	1.4301	A 276 Grade 304
4	Bonnet gasket	Graphite	
5	Headpiece	1.4301	A 276 Grade 304
6	Bolts	1.4301/A2	A 194 B8
7	Elongation tube	1.4306	A 213 TP 304L
8	Stem	1.4301	A 276 Grade 304
9	Spring	1.4571	A 313 Grade 316Ti
10	Flansch	1.4301	A 276 Grade 304
11	Headpiece	1.4301	A 276 Grade 304
12	Gland packing	Graphite / PTFE / MICA	
13	Gland nut	1.4571	A 313 Grade 316Ti
14	Pillars	1.4301	A 276 Grade 304
15	Bush	CW452K	B 159 UNS C51900
16	Actuator	Rubber	

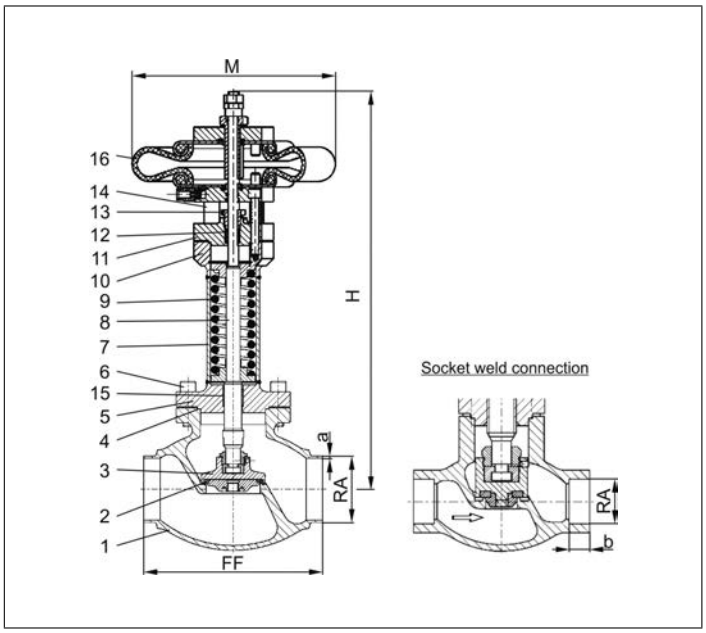

Type 01653 - Standard design	Technical data								
Nominal size	**DN**	**20**	**20**	**25**	**40**	**40**	**50**	**65**	**80**
Dimension code	.X.	2021	2026	2533	4042	4048	5060	657x	8088
Face-to-face dimension	FF	100	100	115	130	130	155	205	245
Height	H	443	443	444	441	441	420	448	467
Outside pipe-Ø ISO 1127	RA	21.3	26.9	33.7	42.4	48.3	60.3	76.1	88.9
Wall thickness pipe ISO 1127	a	2.0	2.0	2.0	2.0	2.0	2.0	2.9	3.2
Outside pipe-Ø ASTM A312	RA	21.34	26.67	33.40	42.16	48.26	60.33	73.03	88.90
Wall thickness pipe ASTM A312	a	dimensions acc. to S10 or S40							
Socket depth	b	10	10	13	13	13	16	16	16
Actuator-Ø	M	229	229	229	229	229	229	229	229
Weight	ca. kg	7.2	7.2	9.1	10.5	10.5	14.5	17.4	22.5
*Kvs-Value	m^3/h	4.3	4.3	11.5	22.6	22.6	37.1	71.1	104.0
*Cv-Value	gal/min	5.0	5.0	13.4	23.9	26.3	43.2	82.9	121.3
Stroke	mm	10	10	14	14	14	14	22	25
Δ P max	bar	50	50	50	16	16	10	3	4
Δ P max with special spring	bar	-	-	-	31	31	18	10	-

Dimensions in mm. * These figures refer to measurements for the flow direction.

Fire Safe Valves
Type 05614 - Check Valve

"Fire Safe"-design without fire type-testing according to EN ISO 10497

Cryogenic-Check Valves, PN50 (DN65=PN45, DN150=PN40)
Stainless steel body and cap
with spring, opening pressure ca. 0.1 bar
" cleaned and degreased for oxygen service "

Part No. 05614.X.000*
Butt or Socket weld connection for stainless steel pipes acc. to ISO 1127 or ASTM A312
Disc seal: PTFE / Carbon filled (25%)

Available options - on request only:
· Welded stainless steel stubs acc. to ISO 1127 or ASTM A312 - length FF + 200mm

Applications:
Approved for air gases, vapours and cryogenic liquefied gases incl. LNG.
Working temperature: -196°C / -321°F (77K) up to +120°C / +248°F (393K)

Materials		DIN EN	ASTM
1	Body	1.4308	A 351 CF8
2	Valve seal	PTFE / Carbon filled (25%)	
3	Disc	1.4301	A 276 Grade 304
4	Spring	1.4571	A 313 Grade 316Ti
5	Bonnet gasket	Graphite	
6	Bolts	1.4301/A2	A 194 B8
7	Cap	1.4301	A 276 Grade 304
7a	Bush from DN65	PTFE	

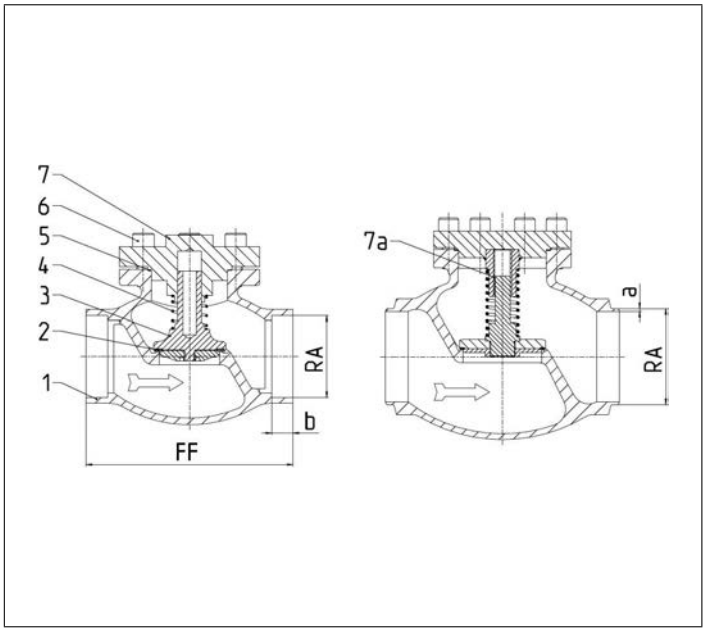

CE

Type 05614 - Standard design	Technical data													
Nominal size	**DN**	**10**	**15**	**15**	**20**	**25**	**32**	**40**	**40**	**50**	**65**	**80**	**100**	**150**
Dimension code	.X.	1012	1517	1521	2026	2533	3238	4042	4048	5060	657x	8088	0114	0168
Face-to-face dimension	FF	70	85	85	100	115	115	130	130	155	205	245	280	400
Height	H	71	71	71	72	75	87	95	95	95	125	150	185	214
Outside pipe-Ø ISO 1127	RA	12.0	17.2	21.3	26.9	33.7	38.0	42.4	48.3	60.3	76.1	88.9	114.3	168.3
Wall thickness pipe ISO 1127	a	1.0	1.6	2.0	2.0	2.0	2.0	2.0	2.0	2.0	2.9	3.2	6.0	7.1
Outside pipe-Ø ASTM A312	RA	13.72	17.15	21.34	26.67	33.40	-	42.16	48.26	60.33	73.03	88.90	114.30	168.30
Wall thickness pipe ASTM A312	a	dimensions acc. to S10 or S40												
Socket depth	b	6	10	10	13	13	-	13	13	16	16	16	20	20
Weight	ca. kg	0.7	0.95	1.0	1.3	1.6	2.4	3.9	3.9	5.7	9.6	14.6	20.0	50.0
Kvs-Value	m^3/h	1.6	3.8	4.3	6.7	11.5	14.0	20.6	22.6	37.1	71.1	104.0	170.0	350.0
Cv-Value	gal/mi	1.9	4.4	5.0	7.8	13.4	16.2	23.9	26.3	43.2	82.9	121.3	198.3	408.4

Dimensions in mm. Leakage rates according to technical information: Leakrates HEROSE Check Valves

Edition 2022-11

Offshore Valves
Type 01751 - Globe Valve

Cryogenic-Globe and Globe/Check Valves, PN50 (DN65=PN45)

Stainless steel body and topwork,
“ live loaded ” gland packing
“ cleaned and degreased for oxygen service "

Part No. 01751.X.000*
Part No. 01751.X.500* Globe/Check Valve
* Butt weld connection for stainless steel pipes acc. to ISO 1127 or ASTM A312

Part No. 01751.X.0004
Part No. 01751.X.5004 Globe/Check Valve
Socket weld connection for stainless steel pipes acc. to ISO 1127 or ASTM A312

Available options - on request only:
· Welded stainless steel stubs acc. to ISO 1127 or ASTM A312 - length FF + 200mm
· Valve with control disc (tapered design)

Applications:
Approved for air gases, vapours and cryogenic liquefied gases incl. LNG.
Working temperature: -255°C / -427°F (18K) up to +120°C / +248°F (393K)
Recommended working temperature: -60°C / -76°F (213K) up to +120°C / +248°F (393K)

Materials		DIN EN	ASTM
1	Body	1.4409	A 351 CF3M
2	Valve seal	PCTFE (Kel-F)	
3	Disc	1.4404	A 276 Grade 316L
4	Bonnet gasket	Graphite	
5	Headpiece	1.4404	A 276 Grade 316L
6	Bolts	1.4571/A4	similar A 194 B8T
8	Stem	1.4404	A 276 Grade 316L
9	Gland packing	Graphite / PTFE / MICA	
10	Gland nut	1.4404	A 276 Grade 316L
11	Handwheel	1.4409	A 351 CF3M
12	Spring	1.4571	A 313 Grade 316Ti
13	Bush	CW452K	B 159 UNS C51900

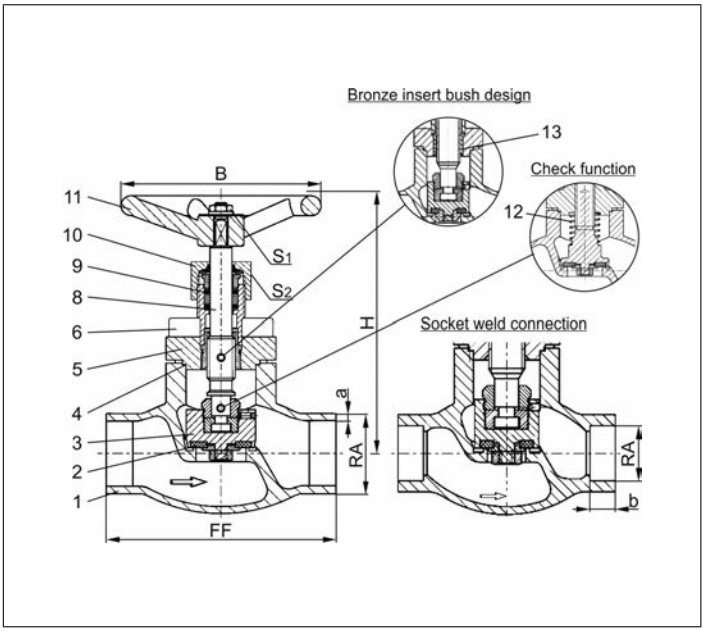

Type 01751 - Standard design	Technical data												
Nominal size	**DN**	**10**	**15**	**15**	**20**	**25**	**32**	**40**	**40**	**50**	**65**	**80**	**100**
Dimension code	.X.	1012	1517	1521	2026	2533	3238	4042	4048	5060	657x	8088	0114
Face-to-face dimension	FF	70	85	85	100	115	115	130	130	155	205	245	280
Height	H	140	140	140	140	140	170	175	175	200	260	310	350
Outside pipe-Ø ISO 1127	RA	12.0	17.2	21.3	26.9	33.7	38.0	42.4	48.3	60.3	76.1	88.9	114.3
Wall thickness pipe ISO 1127	a	1.0	1.6	2.0	2.0	2.0	2.0	2.0	2.0	2.0	2.9	3.2	6.0
Outside pipe-Ø ASTM A312	RA	13.72	17.15	21.34	26.67	33.40	-	42.16	48.26	60.33	73.03	88.90	114.3
Wall thickness pipe ASTM A312	a	dimensions acc. to S10 or S40											
Socket depth	b	6	10	10	13	13	-	13	13	16	16	16	20
Handwheel-Ø	B	100	100	100	100	100	125	125	125	125	200	250	315
Wrench size across flats	S_1	7	7	7	7	7	10	10	10	10	10	10	12
Wrench size across flats	S_2	30	30	30	30	30	36	36	36	36	36	36	41
Weight	ca. kg	1.0	1.25	1.3	1.7	2.0	2.8	4.2	4.2	6.7	10.7	16.0	23.0
Kvs-Value	m^3/h	1.6	3.8	4.3	6.7	11.5	14.0	20.6	22.6	37.1	71.1	104.0	170.0
Cv-Value	gal/min	1.9	4.4	5.0	7.8	13.4	16.2	23.9	26.3	43.2	82.9	121.3	198.3

Dimensions in mm.

Offshore Valves
Type 01755 - Globe Valve

Cryogenic-Globe and Globe/Check Valves, PN50

Stainless steel body and topwork,
“ live loaded ” gland packing
“ cleaned and degreased for oxygen service "

Part No. 01755.X.0001
Part No. 01755.X.5001 Globe/Check Valve
Female thread connection (G) acc. to ISO 228/1

Part No. 01755.X.0006
Part No. 01755.X.5006 Globe/Check Valve
Female thread connection NPT acc. to ANSI B 1.20.1

Available options - on request only:
· Female thread connection (R) acc. to ISO 7-Rc
· Valve with control disc (tapered design)

Applications:
Approved for air gases, vapours and cryogenic liquefied gases incl. LNG.
Working temperature: -255°C / -427°F (18K) up to +120°C / +248°F (393K)
Recommended working temperature: -60°C / -76°F (213K) up to +120°C / +248°F (393K)

Materials		DIN EN	ASTM
1	Body	1.4409	A 351 CF3M
2	Valve seal	PCTFE (Kel-F)	
3	Disc	1.4404	A 276 Grade 316L
4	Bonnet gasket	Graphite	
5	Headpiece	1.4404	A 276 Grade 316L
6	Bolts	1.4571/A4	similar A 194 B8T
8	Stem	1.4404	A 276 Grade 316L
9	Gland packing	Graphite / PTFE / MICA	
10	Gland nut	1.4404	A 276 Grade 316L
11	Handwheel	1.4409	A 351 CF3M
12	Spring	1.4571	A 313 Grade 316Ti
13	Bush	CW452K	B 159 UNS C51900

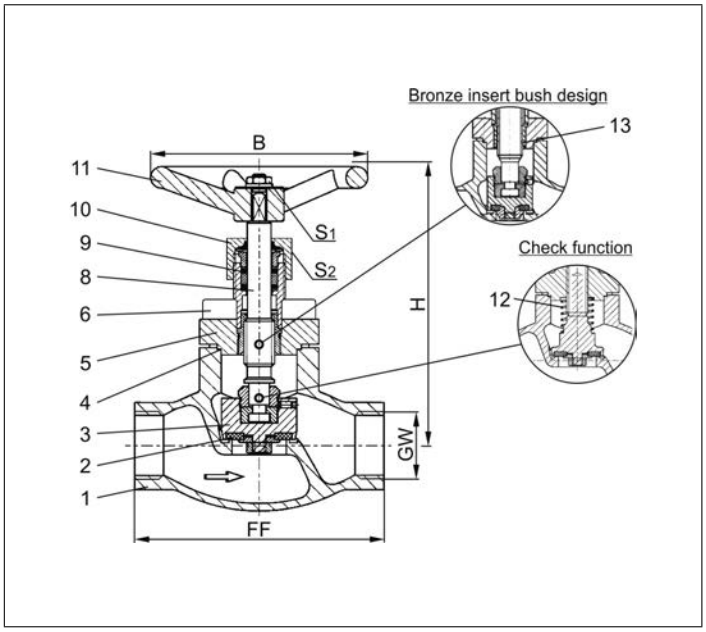

Type 01755 - Standard design	Technical data								
Nominal size	**DN**	**10**	**10**	**15**	**20**	**25**	**40**	**40**	**50**
Thread size	GW	1/4	3/8	1/2	3/4	1	1-1/4	1-1/2	2
Dimension code	.X.	0200	0300	0400	0600	1000	1200	1400	2000
Face-to-face dimension	FF	70	70	85	100	115	130	130	155
Height	H	140	140	140	140	140	175	175	200
Handwheel-Ø	B	100	100	100	100	100	125	125	125
Wrench size across flats	S_1	7	7	7	7	7	10	10	10
Wrench size across flats	S_2	30	30	30	30	30	36	36	36
Weight	ca. kg	1.0	1.0	1.3	1.7	2.0	4.2	4.2	6.7
Kvs-Value	m^3/h	1.6	2.2	4.3	6.7	11.5	20.6	22.6	37.1
Cv-Value	gal/min	1.9	2.6	5.0	7.8	13.4	23.9	26.3	43.2

Dimensions in mm.

Edition 2022-11

Offshore Valves

Type 03751 - Globe Valve, DIN EN Flanges

Cryogenic-Globe and Globe/Check Valves, PN16

Stainless steel body and topwork,
" live loaded " gland packing
" cleaned and degreased for oxygen service "

Part No. 03751.X.0004
Part No. 03751.X.5004 Globe/Check Valve
Flanged connection acc. to DIN EN 1092-1 PN16

Available options - on request only:
· Valve with control disc (tapered design)

Applications:
Approved for air gases, vapours and cryogenic liquefied gases incl. LNG.
Working temperature: -255°C / -427°F (18K) up to +120°C / +248°F (393K)
Recommended working temperature: -60°C / -76°F (213K) up to +120°C / +248°F (393K)

Materials		DIN EN	ASTM
1	Body	1.4409	A 351 CF3M
2	Valve seal	PCTFE (Kel-F)	
3	Disc	1.4404	A 276 Grade 316L
4	Bonnet gasket	Graphite	
5	Headpiece	1.4404	A 276 Grade 316L
6	Bolts	1.4571/A4	similar A 194 B8T
8	Stem	1.4404	A 276 Grade 316L
9	Gland packing	Graphite / PTFE / MICA	
10	Gland nut	1.4404	A 276 Grade 316L
11	Handwheel	1.4409	A 351 CF3M
12	Spring	1.4571	A 313 Grade 316Ti
13	Bush	CW452K	B 159 UNS C51900

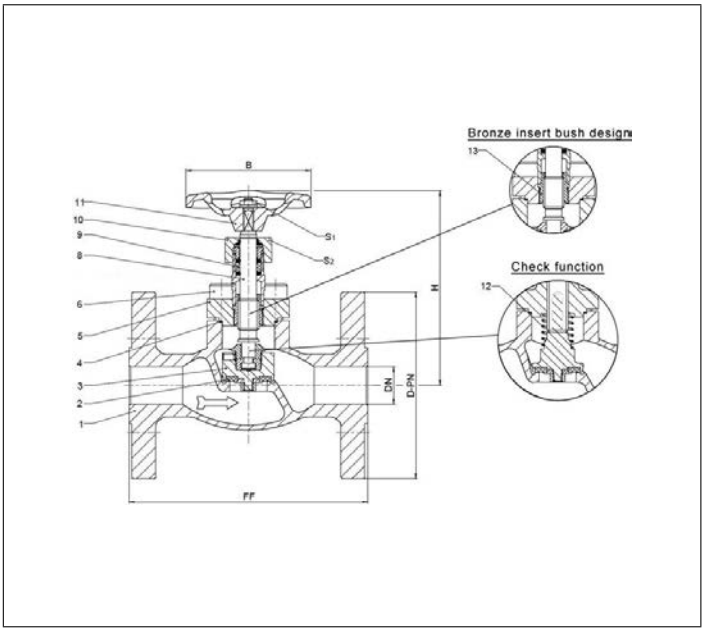

Type 03751 - Standard design	Technical data									
Nominal size	**DN**	**15**	**20**	**25**	**40**	**50**	**65**	**80**	**100**	**150**
Dimension code - Flange EN 1092-1 PN16	.X.	0150	0200	0250	0400	0500	0650	0800	1000	1500
Flange-Ø	D-PN	95	105	115	150	165	185	200	220	285
Face-to-face dimension	FF	140	150	160	200	230	295	310	350	510
Height	H	130	130	130	160	190	240	280	330	380
Handwheel-Ø	B	100	100	100	125	125	200	250	315	360
Wrench size across flats	S_1	7	7	7	10	10	10	10	12	15
Wrench size across flats	S_2	30	30	30	36	36	36	36	41	41
Weight	ca. kg	3.0	3.5	4.5	9.0	13.0	21.0	28.0	42.0	68.5
Kvs-Value	m^3/h	4.3	11.5	11.5	22.6	37.1	71.1	104.0	170.0	350.0
Cv-Value	gal/min	5.0	13.4	13.4	26.3	43.2	82.9	121.3	198.3	408.4
Stroke	mm	12	12	12	15	19	23	25	30	45

Dimensions in mm. Compliance of tightness requirements acc. to EN 1626 for DN150 up to 20 bar differential pressure. In the range of >20-40 bar, 350-700ml per second (1 bar, 20°C [68°F]) are reached.

Offshore Valves

Type 03751 - Globe Valve, DIN EN Flanges

Cryogenic-Globe and Globe/Check Valves, PN40

Stainless steel body and topwork,
" live loaded " gland packing
" cleaned and degreased for oxygen service "

Part No. 03751.X.0002
Part No. 03751.X.5002 Globe/Check Valve
Flanged connection acc. to DIN EN 1092-1 PN40

Available options - on request only:
· Valve with control disc (tapered design)

Applications:
Approved for air gases, vapours and cryogenic liquefied gases incl. LNG.
Working temperature: -255°C / -427°F (18K) up to +120°C / +248°F (393K)
Recommended working temperature: -60°C / -76°F (213K) up to +120°C / +248°F (393K)

Materials		DIN EN	ASTM
1	Body	1.4409	A 351 CF3M
2	Valve seal	PCTFE (Kel-F)	
3	Disc	1.4404	A 276 Grade 316L
4	Bonnet gasket	Graphite	
5	Headpiece	1.4404	A 276 Grade 316L
6	Bolts	1.4571/A4	similar A 194 B8T
8	Stem	1.4404	A 276 Grade 316L
9	Gland packing	Graphite / PTFE / MICA	
10	Gland nut	1.4404	A 276 Grade 316L
11	Handwheel	1.4409	A 351 CF3M
12	Spring	1.4571	A 313 Grade 316Ti
13	Bush	CW452K	B 159 UNS C51900

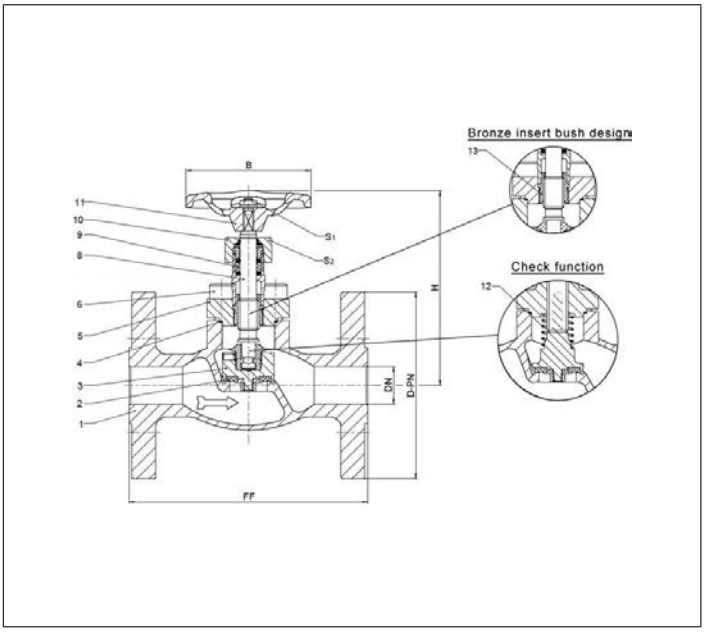

Type 03751 - Standard design	Technical data									
Nominal size	**DN**	**15**	**20**	**25**	**40**	**50**	**65**	**80**	**100**	**150**
Dimension code - Flange EN 1092-1 PN40	.X.	0150	0200	0250	0400	0500	0650	0800	1000	1500
Flange-Ø	D-PN	95	105	115	150	165	185	200	235	300
Face-to-face dimension	FF	140	150	160	200	230	290	310	350	550
Height	H	130	130	130	160	190	240	280	330	380
Handwheel-Ø	B	100	100	100	125	125	200	250	315	360
Wrench size across flats	S_1	7	7	7	10	10	10	10	12	15
Wrench size across flats	S_2	30	30	30	36	36	36	36	41	41
Weight	ca. kg	3.0	3.5	4.5	9.0	13.0	21.0	28.0	42.0	68.5
Kvs-Value	m^3/h	4.3	11.5	11.5	22.6	37.1	71.1	104.0	170.0	350.0
Cv-Value	gal/min	5.0	13.4	13.4	26.3	43.2	82.9	121.3	198.3	408.4
Stroke	mm	12	12	12	15	19	23	25	30	45

Dimensions in mm. Compliance of tightness requirements acc. to EN 1626 for DN150 up to 20 bar differential pressure. In the range of >20-40 bar, 350-700ml per second (1 bar, 20°C [68°F]) are reached.

Edition 2022-11

Offshore Valves

Type 03751 - Globe Valve, ANSI Flanges

Cryogenic-Globe and Globe/Check Valves, class 300

Stainless steel body and topwork,
" live loaded " gland packing
" cleaned and degreased for oxygen service "

Part No. 03751.X.0003
Part No. 03751.X.5003 Globe/Check Valve
Flanged connection acc. to ANSI B16.5 class 300

Available options - on request only:
· Valve with control disc (tapered design)

Applications:
Approved for air gases, vapours and cryogenic liquefied gases incl. LNG.
Working temperature: -255°C / -427°F (18K) up to +120°C / +248°F (393K)
Recommended working temperature: -60°C / -76°F (213K) up to +120°C / +248°F (393K)

Materials		DIN EN	ASTM
1	Body	1.4409	A 351 CF3M
2	Valve seal	PCTFE (Kel-F)	
3	Disc	1.4404	A 276 Grade 316L
4	Bonnet gasket	Graphite	
5	Headpiece	1.4404	A 276 Grade 316L
6	Bolts	1.4571/A4	similar A 194 B8T
8	Stem	1.4404	A 276 Grade 316L
9	Gland packing	Graphite / PTFE / MICA	
10	Gland nut	1.4404	A 276 Grade 316L
11	Handwheel	1.4409	A 351 CF3M
12	Spring	1.4571	A 313 Grade 316Ti
13	Bush	CW452K	B 159 UNS C51900

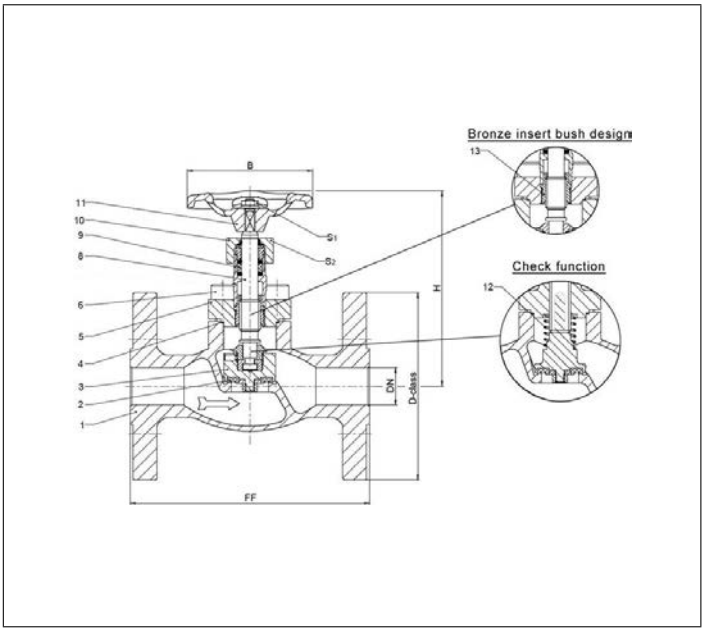

Type 03751 - Standard design	Technical data									
Nominal size	**DN**	**15**	**20**	**25**	**40**	**50**	**65**	**80**	**100**	**150**
Dimension code - Flange ANSI B16.5 class 300	.X.	0400	0600	1000	1400	2000	2400	3000	4000	6000
Flange-Ø	D-class	95	115	125	155	165	190	210	255	320
Face-to-face dimension	FF	140	150	160	200	230	290	310	350	597
Height	H	130	130	130	160	190	240	280	330	380
Handwheel-Ø	B	100	100	100	125	125	200	250	315	360
Wrench size across flats	S_1	7	7	7	10	10	10	10	12	15
Wrench size across flats	S_2	30	30	30	36	36	36	36	41	41
Weight	ca. kg	3.0	3.5	4.5	9.0	13.0	21.0	28.0	42.0	68.5
Kvs-Value	m^3/h	4.3	11.5	11.5	22.6	37.1	71.1	104.0	170.0	350.0
Cv-Value	gal/min	5.0	13.4	13.4	26.3	43.2	82.9	121.3	198.3	408.4
Stroke	mm	12	12	12	15	19	23	25	30	45

Dimensions in mm. Compliance of tightness requirements acc. to EN 1626 for DN150 up to 20 bar differential pressure. In the range of >20-40 bar, 350-700ml per second (1 bar, 20°C [68°F]) are reached.

Offshore Valves

Type 03751 - Globe Valve, ANSI Flanges

Cryogenic-Globe and Globe/Check Valves, class 150

Stainless steel body and topwork,
" live loaded " gland packing
" cleaned and degreased for oxygen service "

Part No. 03751.X.0001
Part No. 03751.X.5001 Globe/Check Valve
Flanged connection acc. to ANSI B16.5 class 150

Available options - on request only:
· Valve with control disc (tapered design)

Applications:
Approved for air gases, vapours and cryogenic liquefied gases incl. LNG.
Working temperature: -255°C / -427°F (18K) up to +120°C / +248°F (393K)
Recommended working temperature: -60°C / -76°F (213K) up to +120°C / +248°F (393K)

Materials		DIN EN	ASTM
1	Body	1.4409	A 351 CF3M
2	Valve seal	PCTFE (Kel-F)	
3	Disc	1.4404	A 276 Grade 316L
4	Bonnet gasket	Graphite	
5	Headpiece	1.4404	A 276 Grade 316L
6	Bolts	1.4571/A4	similar A 194 B8T
8	Stem	1.4404	A 276 Grade 316L
9	Gland packing	Graphite / PTFE / MICA	
10	Gland nut	1.4404	A 276 Grade 316L
11	Handwheel	1.4409	A 351 CF3M
12	Spring	1.4571	A 313 Grade 316Ti
13	Bush	CW452K	B 159 UNS C51900

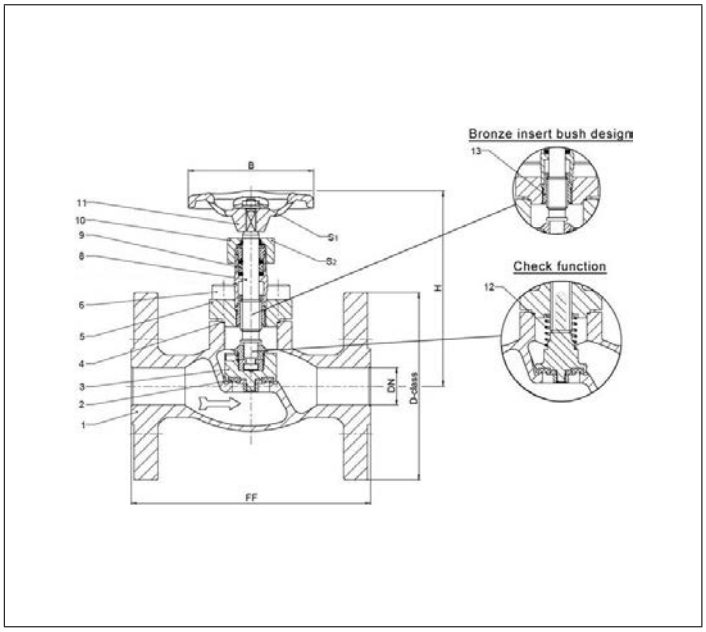

Type 03751 - Standard design	Technical data									
Nominal size	**DN**	**15**	**20**	**25**	**40**	**50**	**65**	**80**	**100**	**150**
Dimension code - Flange ANSI B16.5 class 150	.X.	0400	0600	1000	1400	2000	2400	3000	4000	6000
Flange-Ø	D-class	90	100	110	125	150	180	190	230	280
Face-to-face dimension	FF	140	150	160	200	230	290	310	350	577
Height	H	130	130	130	160	190	240	280	330	380
Handwheel-Ø	B	100	100	100	125	125	200	250	315	360
Wrench size across flats	S_1	7	7	7	10	10	10	10	12	15
Wrench size across flats	S_2	30	30	30	36	36	36	36	41	41
Weight	ca. kg	3.0	3.5	4.5	9.0	13.0	21.0	28.0	42.0	68.5
Kvs-Value	m^3/h	4.3	11.5	11.5	22.6	37.1	71.1	104.0	170.0	350.0
Cv-Value	gal/min	5.0	13.4	13.4	26.3	43.2	82.9	121.3	198.3	408.4
Stroke	mm	12	12	12	15	19	23	25	30	45

Dimensions in mm. Compliance of tightness requirements acc. to EN 1626 for DN150 up to 20 bar differential pressure. In the range of >20-40 bar, 350-700ml per second (1 bar, 20°C [68°F]) are reached.

Edition 2022-11

Offshore Valves

Type 01741 - Globe Valve

Cryogenic-Globe and Globe/Check Valves, PN50 (DN65=PN45, DN150=PN40)

Stainless steel body and topwork,
“ live loaded ” gland packing
“ cleaned and degreased for oxygen service "

Part No. 01741.X.001* (H = 270mm)
Part No. 01741.X.002* (H = 370mm)
Part No. 01741.X.501* (H = 270mm) Globe/Check Valve
Part No. 01741.X.502* (H = 370mm) Globe/Check Valve
* Butt weld connection for stainless steel pipes acc. to ISO 1127 or ASTM A312

Part No. 01741.X.0014 (H = 270mm)
Part No. 01741.X.0024 (H = 370mm)
Part No. 01741.X.5014 (H = 270mm) Globe/Check Valve
Part No. 01741.X.5024 (H = 370mm) Globe/Check Valve
Socket weld connection for stainless steel pipes acc. to ISO 1127 or ASTM A312

Available options - on request only:
· Extension H up to 900mm
· Valve with control disc (tapered design)

Applications:
Approved for air gases, vapours and cryogenic liquefied gases incl. LNG.
Working temperature: -255°C / -427°F (18K) up to +120°C / +248°F (393K)

Materials		DIN EN	ASTM
1	Body	1.4409	A 351 CF3M
2	Valve seal	PCTFE (Kel-F)	
3	Disc	1.4404	A 276 Grade 316L
4	Bonnet gasket	Graphite	
5	Headpiece	1.4404	A 276 Grade 316L
6	Bolts	1.4571/A4	similar A 194 B8T
7	Elongation tube	1.4571	A 213 TP 316Ti
8	Stem	1.4404	A 276 Grade 316L
9	Gland packing	Graphite / PTFE / MICA	
10	Gland nut	1.4404	A 276 Grade 316L
11	Handwheel	1.4409	A 351 CF3M
12	Spring	1.4571	A 313 Grade 316Ti
13	Bush	CW452K	B 159 UNS C51900

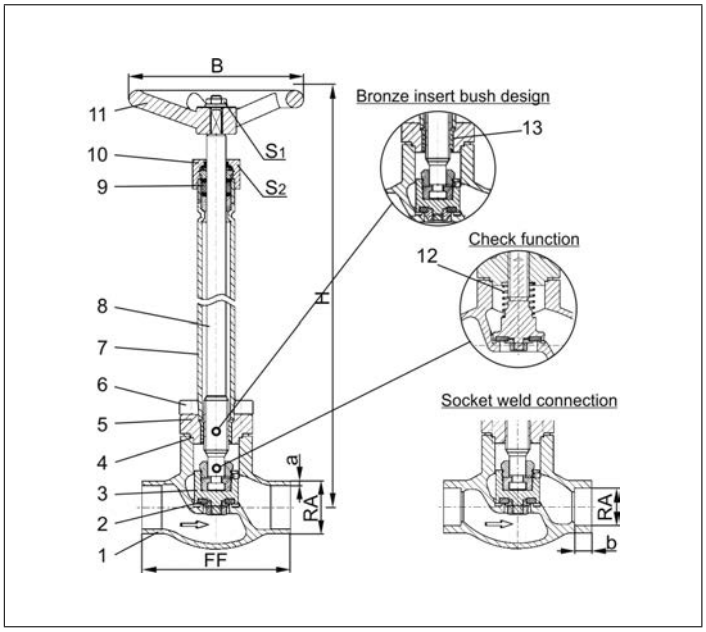

Type 01741 - Standard design	Technical data													
Nominal size	**DN**	**10**	**15**	**15**	**20**	**25**	**32**	**40**	**40**	**50**	**65**	**80**	**100**	**150**
Dimension code	.X.	1012	1517	1521	2026	2533	3238	4042	4048	5060	657x	8088	0114	0168
Face-to-face dimension	FF	70	85	85	100	115	115	130	130	155	205	245	280	400
Height	H	270 mm or 370 mm										320/370	370	420
Outside pipe-Ø ISO 1127	RA	12.0	17.2	21.3	26.9	33.7	38.0	42.4	48.3	60.3	76.1	88.9	114.3	168.3
Wall thickness pipe ISO 1127	a	1.0	1.6	2.0	2.0	2.0	2.0	2.0	2.0	2.0	2.9	3.2	6.0	7.1
Outside pipe-Ø ASTM A312	RA	13.72	17.15	21.34	26.67	33.40	-	42.16	48.26	60.33	73.03	88.90	114.3	168.3
Wall thickness pipe ASTM A312	a	dimensions acc. to S10 or S40												
Socket depth	b	6	10	10	13	13	-	13	13	16	16	16	20	20
Handwheel-Ø	B	100	100	100	100	100	125	125	125	125	200	250	315	360
Wrench size across flats	S_1	7	7	7	7	7	10	10	10	10	10	10	12	15
Wrench size across flats	S_2	30	30	30	30	30	36	36	36	36	36	36	41	41
Weight	ca. kg	1.4	1.65	1.7	2.1	2.4	3.3	4.7	4.7	7.2	12.7	17.0	24.5	54.0
Kvs-Value	m^3/h	1.6	3.8	4.3	6.7	11.5	14.0	20.6	22.6	37.1	71.1	104.0	170.0	350.0
Cv-Value	gal/min	1.9	4.4	5.0	7.8	13.4	16.2	23.9	26.3	43.2	82.9	121.3	198.3	408.4

Dimensions in mm. Compliance of tightness requirements acc. to EN 1626 for DN150 up to 20 bar differential pressure. In the range of >20-40 bar, 350-700ml per second (1 bar, 20°C [68°F]) are reached.

Offshore Valves
Type 01741 - Globe Valve

Cryogenic Globe Valves, DN200

Stainless steel body and topwork
" live loaded " gland packing

Part No. 01741.0219.001* (H=560), PN20

Part No. 01741.0219.006* (H=1000), PN20/PN25
*Butt weld connection for stainless steel pipes acc. to ISO 1127 or ASTM A312

Part No. 01741.0219.00*4, PN25
Socket weld connection for stainless steel pipes acc. to ISO 1127 or ASTM A312

In flow direction, the valve with the nominal size DN200 is conform to tightness class L1 up to 9 bar maximum differential pressure acc. to DIN 12567 for LNG use.
This standard can also be used for the tightness class of other cryogenic gases.

Available options - on request only

Applications:
Approved for air gases, vapours and cryogenic liquefied gases incl. LNG.
Working temperature: -196°C / -321°F (77K) up to +120°C / +248°F (393K)

Materials		DIN EN	ASTM
1	Body	1.4409	A 351 CF3M
2	Valve seal	PCTFE (Kel-F)	
3	Disc	1.4404	A 276 Grade 316L
4	Bonnet gasket	Graphite	
5	Headpiece	1.4404	A 276 Grade 316L
6	Bolts	1.4571/A4	similar A 194 B8T
7	Elongation tube	1.4571	A 213 TP 316Ti
8	Stem	1.4404	A 276 Grade 316L
9	Gland packing	Graphite / PTFE / MICA	
10	Gland nut	1.4404	A 276 Grade 316L
11	Handwheel	1.4409	A 351 CF3M
13	Bush	CW452K	B 159 UNS C51900

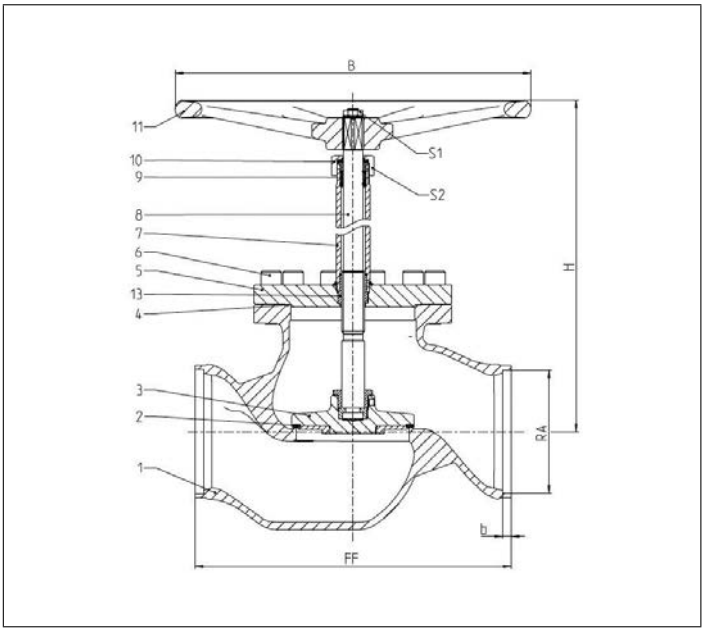

Type 01741 - Standard design	Technical data	
Nominal size	**DN**	**200**
Dimension code	.X.	0219
Face-to-face dimension	FF	560
Height	H	560
Outside pipe-Ø ISO 1127	RA	219.1
Wall thickness pipe ISO 1127	a	6.3
Outside pipe-Ø ASTM A312	RA	219.1
Wall thickness pipe ASTM A312	a	dimensions acc. to S10 or S40
Socket depth	b	15
Handwheel-Ø	B	630
Wrench size across flats	S_1	30
Wrench size across flats	S_2	65
Weight	ca. kg	135
Kvs-Value	m^3/h	680
Cv-Value	gal/min	793

Dimensions in mm.

Edition 2022-11

Offshore Valves

Type 01745 - Globe Valve

Cryogenic-Globe and Globe/Check Valves, PN50

Stainless steel body and topwork,
“ live loaded ” gland packing
“ cleaned and degreased for oxygen service "

Part No. 01745.X.0011 (H = 270mm)
Part No. 01745.X.0021 (H = 370mm)
Part No. 01745.X.5011 (H = 270mm) Globe/Check Valve
Part No. 01745.X.5021 (H = 370mm) Globe/Check Valve
Female thread connection (G) acc. to ISO 228/1

Part No. 01745.X.0016 (H = 270mm)
Part No. 01745.X.0026 (H = 370mm)
Part No. 01745.X.5016 (H = 270mm) Globe/Check Valve
Part No. 01745.X.5026 (H = 370mm) Globe/Check Valve
Female thread connection NPT acc. to ANSI B 1.20.1

Available options - on request only:
· Female thread connection (R) acc. to ISO 7-Rc
· Extension H up to 900mm
· Valve with control disc (tapered design)

Applications:
Approved for air gases, vapours and cryogenic liquefied gases incl. LNG.
Working temperature: -255°C / -427°F (18K) up to +120°C / +248°F (393K)

Materials		DIN EN	ASTM
1	Body	1.4409	A 351 CF3M
2	Valve seal	PCTFE (Kel-F)	
3	Disc	1.4404	A 276 Grade 316L
4	Bonnet gasket	Graphite	
5	Headpiece	1.4404	A 276 Grade
6	Bolts	1.4571/A4	similar A 194 B8T
7	Elongation tube	1.4571	A 213 TP 316Ti
8	Stem	1.4404	A 276 Grade 316L
9	Gland packing	Graphite / PTFE / MICA	
10	Gland nut	1.4404	A 276 Grade 316L
11	Handwheel	1.4409	A 351 CF3M
12	Spring	1.4571	A 313 Grade 316Ti
13	Bush	CW452K	B 159 UNS C51900

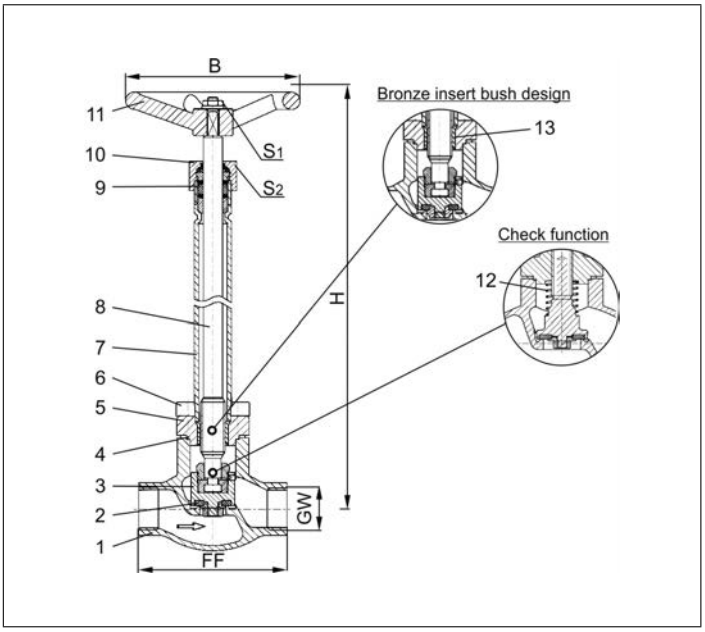

Type 01745 - Standard design	Technical data								
Nominal size	**DN**	**10**	**10**	**15**	**20**	**25**	**40**	**40**	**50**
Thread size	GW	1/4	3/8	1/2	3/4	1	1-1/4	1-1/2	2
Dimension code	.X.	0200	0300	0400	0600	1000	1200	1400	2000
Face-to-face dimension	FF	70	70	85	100	115	130	130	155
Height	H	270 mm or 370 mm							
Handwheel-Ø	B	100	100	100	100	100	125	125	125
Wrench size across flats	S_1	7	7	7	7	7	10	10	10
Wrench size across flats	S_2	30	30	30	30	30	36	36	36
Weight	ca. kg	1.4	1.4	1.7	2.1	2.4	4.7	4.7	7.2
Kvs-Value	m^3/h	1.6	2.2	4.3	6.7	11.5	20.6	22.6	37.1
Cv-Value	gal/min	1.9	2.6	5.0	7.8	13.4	23.9	26.3	43.2

Dimensions in mm.

Offshore Valves

Type 03741 - Globe Valve, DIN EN Flanges

Cryogenic-Globe and Globe/Check Valves, PN16

Stainless steel body and topwork,
" live loaded " gland packing
" cleaned and degreased for oxygen service "

Part No. 03741.X.0014 (H = 270mm)
Part No. 03741.X.0024 (H = 370mm)
Part No. 03741.X.5014 (H = 270mm) Globe/Check Valve
Part No. 03741.X.5024 (H = 370mm) Globe/Check Valve
Flanged connection acc. to DIN EN 1092-1 PN16

Available options - on request only:
· Extension H up to 900mm
· Valve with control disc (tapered design)

Applications:
Approved for air gases, vapours and cryogenic liquefied gases incl. LNG.
Working temperature: -255°C / -427°F (18K) up to +120°C / +248°F (393K)

Materials		DIN EN	ASTM
1	Body	1.4409	A 351 CF3M
2	Valve seal	PCTFE (Kel-F)	
3	Disc	1.4404	A 276 Grade 316L
4	Bonnet gasket	Graphite	
5	Headpiece	1.4404	A 276 Grade 316L
6	Bolts	1.4571/A4	similar A 194 B8T
7	Elongation tube	1.4571	A 213 TP316Ti
8	Stem	1.4404	A 276 Grade 316L
9	Gland packing	Graphite / PTFE / MICA	
10	Gland nut	1.4404	A 276 Grade 316L
11	Handwheel	1.4409	A 351 CF3M
12	Spring	1.4571	A 313 Grade 316Ti
13	Bush	CW452K	B 159 UNS C51900

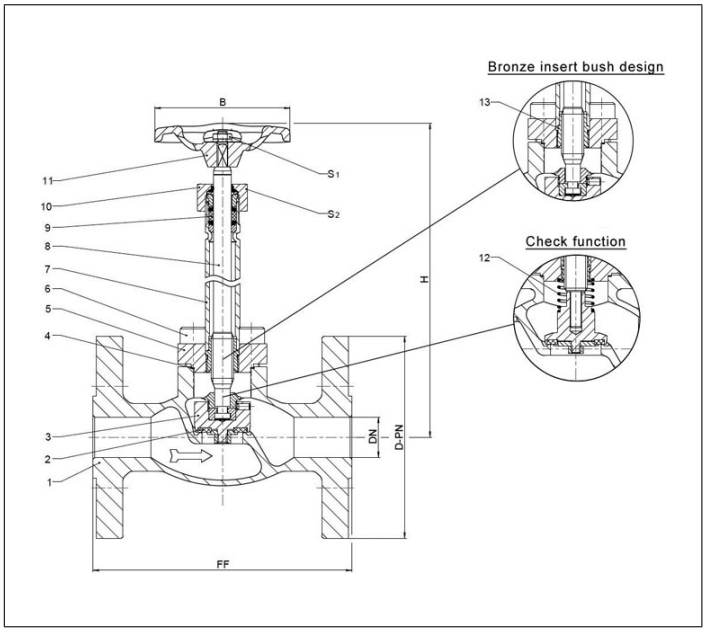

ASSOCIATION OF AMERICAN RAILROADS

Type 03741 - Standard design	Technical data									
Nominal size	**DN**	**15**	**20**	**25**	**40**	**50**	**65**	**80**	**100**	**150**
Dimension code - Flange EN 1092-1 PN16	.X.	0150	0200	0250	0400	0500	0650	0800	1000	1500
Flange-Ø	D-PN	95	105	115	150	165	185	200	220	285
Face-to-face dimension	FF	140	150	160	200	230	295	310	350	510
Height	H	270 mm or 370 mm							370	420
Handwheel-Ø	B	100	100	100	125	125	200	250	315	360
Wrench size across flats	S_1	7	7	7	10	10	10	10	12	15
Wrench size across flats	S_2	30	30	30	36	36	36	36	41	41
Weight	ca. kg	3.0	3.5	5.0	9.0	13.0	21.0	28.0	42.0	83.0
Kvs-Value	m^3/h	4.3	6.7	11.5	22.6	37.1	71.1	104.0	170.0	350.0
Cv-Value	gal/min	5.0	7.8	13.4	26.3	43.2	82.9	121.3	198.3	408.4
Stroke	mm	12	12	12	15	19	23	25	30	45

Dimensions in mm. Compliance of tightness requirements acc. to EN 1626 for DN150 up to 20 bar differential pressure. In the range of >20-40 bar, 350-700ml per second (1 bar, 20°C [68°F]) are reached.

Edition 2022-11

Offshore Valves

Type 03741 - Globe Valve, DIN EN Flanges

Cryogenic-Globe and Globe/Check Valves, PN40

Stainless steel body and topwork,
" live loaded " gland packing
" cleaned and degreased for oxygen service "

Part No. 03741.X.0012 (H = 270mm)
Part No. 03741.X.0022 (H = 370mm)
Part No. 03741.X.5012 (H = 270mm) Globe/Check Valve
Part No. 03741.X.5022 (H = 370mm) Globe/Check Valve
Flanged connection acc. to DIN EN 1092-1 PN40

Available options - on request only:
· Extension H up to 900mm
· Valve with control disc (tapered design)

Applications:
Approved for air gases, vapours and cryogenic liquefied gases incl. LNG.
Working temperature: -255°C / -427°F (18K) up to +120°C / +248°F (393K)

Materials		DIN EN	ASTM
1	Body	1.4409	A 351 CF3M
2	Valve seal	PCTFE (Kel-F)	
3	Disc	1.4404	A 276 Grade 316L
4	Bonnet gasket	Graphite	
5	Headpiece	1.4404	A 276 Grade 316L
6	Bolts	1.4571/A4	similar A 194 B8T
7	Elongation tube	1.4571	A 213 TP316Ti
8	Stem	1.4404	A 276 Grade 316L
9	Gland packing	Graphite / PTFE / MICA	
10	Gland nut	1.4404	A 276 Grade 316L
11	Handwheel	1.4409	A 351 CF3M
12	Spring	1.4571	A 313 Grade 316Ti
13	Bush	CW452K	B 159 UNS C51900

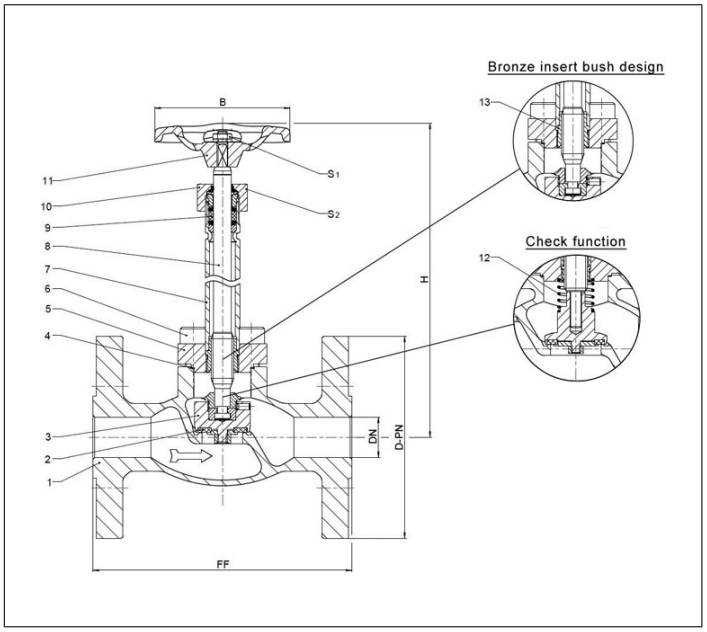

ASSOCIATION OF AMERICAN RAILROADS

Type 03741 - Standard design	Technical data									
Nominal size	**DN**	**15**	**20**	**25**	**40**	**50**	**65**	**80**	**100**	**150**
Dimension code - Flange EN 1092-1 PN40	.X.	0150	0200	0250	0400	0500	0650	0800	1000	1500
Flange-Ø	D-PN	95	105	115	150	165	185	200	235	300
Face-to-face dimension	FF	140	150	160	200	230	290	310	350	550
Height	H	270 mm or 370 mm							370	420
Handwheel-Ø	B	100	100	100	125	125	200	250	315	360
Wrench size across flats	S_1	7	7	7	10	10	10	10	12	15
Wrench size across flats	S_2	30	30	30	36	36	36	36	41	41
Weight	ca. kg	3.0	3.5	5.0	9.0	13.0	21.0	28.0	42.0	83.0
Kvs-Value	m^3/h	4.3	6.7	11.5	22.6	37.1	71.1	104.0	170.0	350.0
Cv-Value	gal/min	5.0	7.8	13.4	26.3	43.2	82.9	121.3	198.3	408.4
Stroke	mm	12	12	12	15	19	23	25	30	45

Dimensions in mm. Compliance of tightness requirements acc. to EN 1626 for DN150 up to 20 bar differential pressure. In the range of >20-40 bar, 350-700ml per second (1 bar, 20°C [68°F]) are reached.

Offshore Valves

Type 03741 - Globe Valve, ANSI Flanges

Cryogenic-Globe and Globe/Check Valves, class 300

Stainless steel body and topwork,
" live loaded " gland packing
" cleaned and degreased for oxygen service "

Part No. 03741.X.0013 (H = 270mm)
Part No. 03741.X.0023 (H = 370mm)
Part No. 03741.X.5013 (H = 270mm) mit Rückschlagfunktion
Part No. 03741.X.5023 (H = 370mm) mit Rückschlagfunktion
Flanged connection acc. to ANSI B16.5 class 300

Available options - on request only:
· Extension H up to 900mm
· Valve with control disc (tapered design)

Applications:
Approved for air gases, vapours and cryogenic liquefied gases incl. LNG.
Working temperature: -255°C / -427°F (18K) up to +120°C / +248°F (393K)

Materials		DIN EN	ASTM
1	Body	1.4409	A 351 CF3M
2	Valve seal	PCTFE (Kel-F)	
3	Disc	1.4404	A 276 Grade 316L
4	Bonnet gasket	Graphite	
5	Headpiece	1.4404	A 276 Grade 316L
6	Bolts	1.4571/A4	similar A 194 B8T
7	Elongation tube	1.4571	A 213 TP316Ti
8	Stem	1.4404	A 276 Grade 316L
9	Gland packing	Graphite / PTFE / MICA	
10	Gland nut	1.4404	A 276 Grade 316L
11	Handwheel	1.4409	A 351 CF3M
12	Spring	1.4571	A 313 Grade 316Ti
13	Bush	CW452K	B 159 UNS C51900

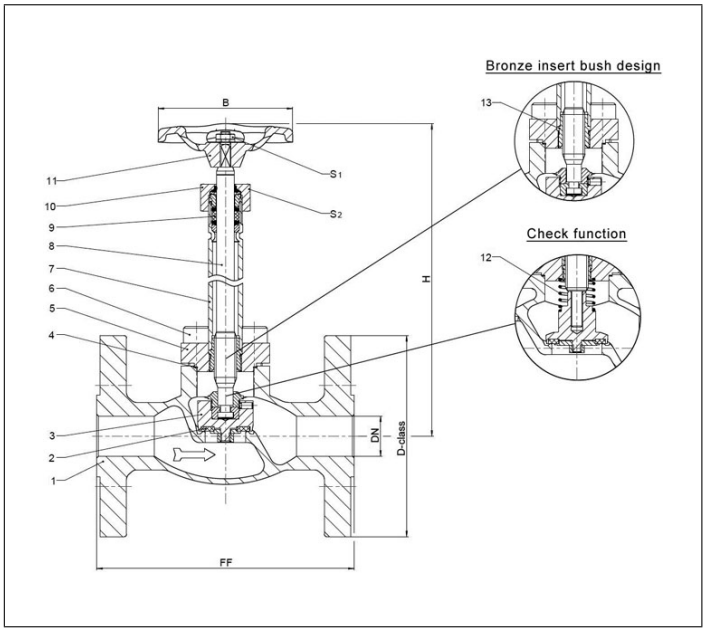

ASSOCIATION OF AMERICAN RAILROADS

Type 03741 - Standard design	Technical data									
Nominal size	**DN**	**15**	**20**	**25**	**40**	**50**	**65**	**80**	**100**	**150**
Dimension code - Flange ANSI B16.5 class 300	.X.	0400	0600	1000	1400	2000	2400	3000	4000	6000
Flange-Ø	D-class	95	115	125	155	165	190	210	255	320
Face-to-face dimension	FF	140	150	160	200	230	290	310	350	597
Height	H	270 mm or 370 mm							370	420
Handwheel-Ø	B	100	100	100	125	125	200	250	315	360
Wrench size across flats	S_1	7	7	7	10	10	10	10	12	15
Wrench size across flats	S_2	30	30	30	36	36	36	36	41	41
Weight	ca. kg	3.0	3.5	5.0	9.0	13.0	21.0	28.0	42.0	83.0
Kvs-Value	m^3/h	4.3	6.7	11.5	22.6	37.1	71.1	104.0	170.0	350.0
Cv-Value	gal/min	5.0	7.8	13.4	26.3	43.2	82.9	121.3	198.3	408.4
Stroke	mm	12	12	12	15	19	23	25	30	45

Dimensions in mm. Compliance of tightness requirements acc. to EN 1626 for DN150 up to 20 bar differential pressure. In the range of >20-40 bar, 350-700ml per second (1 bar, 20°C [68°F]) are reached.

Edition 2022-11

Offshore Valves

Type 03741 - Globe Valve, ANSI Flanges

Cryogenic-Globe and Globe/Check Valves, class 150

Stainless steel body and topwork,
" live loaded " gland packing
" cleaned and degreased for oxygen service "

Part No. 03741.X.0011 (H = 270mm)
Part No. 03741.X.0021 (H = 370mm)
Part No. 03741.X.5011 (H = 270mm) mit Rückschlagfunktion
Part No. 03741.X.5021 (H = 370mm) mit Rückschlagfunktion
Flanged connection acc. to ANSI B16.5 class 150

Available options - on request only:
· Extension H up to 900mm
· Valve with control disc (tapered design)

Applications:
Approved for air gases, vapours and cryogenic liquefied gases incl. LNG.
Working temperature: -255°C / -427°F (18K) up to +120°C / +248°F (393K)

Materials		DIN EN	ASTM
1	Body	1.4409	A 351 CF3M
2	Valve seal	PCTFE (Kel-F)	
3	Disc	1.4404	A 276 Grade 316L
4	Bonnet gasket	Graphite	
5	Headpiece	1.4404	A 276 Grade 316L
6	Bolts	1.4571/A4	similar A 194 B8T
7	Elongation tube	1.4571	A 213 TP316Ti
8	Stem	1.4404	A 276 Grade 316L
9	Gland packing	Graphite / PTFE / MICA	
10	Gland nut	1.4404	A 276 Grade 316L
11	Handwheel	1.4409	A 351 CF3M
12	Spring	1.4571	A 313 Grade 316Ti
13	Bush	CW452K	B 159 UNS C51900

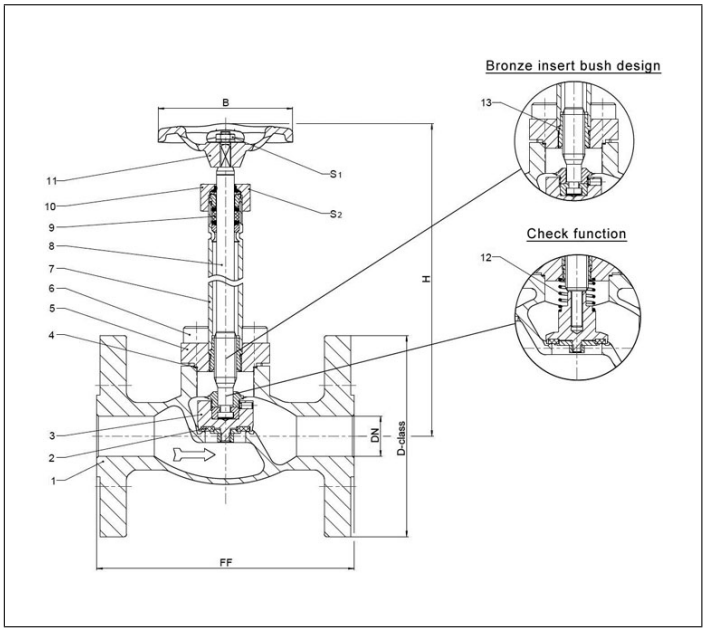

ASSOCIATION OF AMERICAN RAILROADS

Type 03741 - Standard design	Technical data									
Nominal size	**DN**	**15**	**20**	**25**	**40**	**50**	**65**	**80**	**100**	**150**
Dimension code - Flange ANSI B16.5 class 150	.X.	0400	0600	1000	1400	2000	2400	3000	4000	6000
Flange-Ø	D-class	90	100	110	125	150	180	190	230	280
Face-to-face dimension	FF	140	150	160	200	230	290	310	350	577
Height	H	270 mm or 370 mm							370	420
Handwheel-Ø	B	100	100	100	125	125	200	250	315	360
Wrench size across flats	S_1	7	7	7	10	10	10	10	12	15
Wrench size across flats	S_2	30	30	30	36	36	36	36	41	41
Weight	ca. kg	3.0	3.5	5.0	9.0	13.0	21.0	28.0	42.0	83.0
Kvs-Value	m^3/h	4.3	6.7	11.5	22.6	37.1	71.1	104.0	170.0	350.0
Cv-Value	gal/min	5.0	7.8	13.4	26.3	43.2	82.9	121.3	198.3	408.4
Stroke	mm	12	12	12	15	19	23	25	30	45

Dimensions in mm. Compliance of tightness requirements acc. to EN 1626 for DN150 up to 20 bar differential pressure. In the range of >20-40 bar, 350-700ml per second (1 bar, 20°C [68°F]) are reached.

Offshore Valves

Type 03741 - Globe Valve, ANSI Flanges

Cryogenic Globe Valves, class 150

Stainless steel body and topwork,
" live loaded " gland packing

Part No. 03741.8000.0011 (H=560)
Flanged connection acc. to ANSI B16.5 class 150

In flow direction, the valve with the nominal size DN200 is conform to tightness class L1 up to 12 bar maximum differential pressure acc. to DIN 12567 for LNG use.
This standard can also be used for the tightness class of other cryogenic gases.

Available options - on request only

Applications:
Approved for air gases, vapours and cryogenic liquefied gases incl. LNG.
Working temperature: -196°C / -321°F (77K) up to +120°C / +248°F (393K)

Materials		DIN EN	ASTM
1	Body	1.4409	A 351 CF3M
1a	Flange	1.4404	A 276 Grade 316L
2	Valve seal	PCTFE (Kel-F)	
3	Disc	1.4404	A 276 Grade 316L
4	Bonnet gasket	Graphite	
5	Headpiece	1.4404	A 276 Grade 316L
6	Bolts	1.4571/A4	similar A 194 B8T
7	Elongation tube	1.4571	A 213 TP 316Ti
8	Stem	1.4404	A 276 Grade 316L
9	Gland packing	Graphite / PTFE / MICA	
10	Gland nut	1.4404	A 276 Grade 316L
11	Handwheel	1.4409	A 351 CF3M
12	Spring	1.4571	A 313 Grade 316Ti
13	Bush	CW452K	B 159 UNS C51900

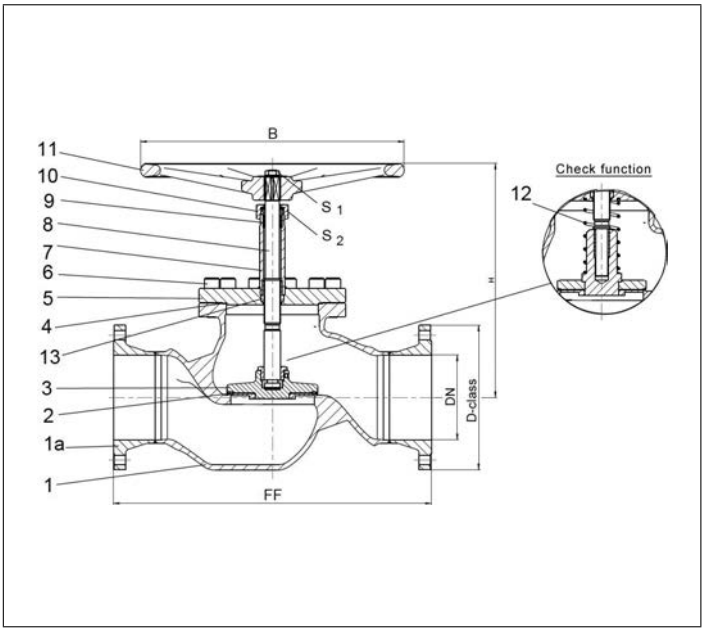

ASSOCIATION OF AMERICAN RAILROADS

Type 03741 - Standard design	Technical data	
Nominal size	**DN**	**200**
Dimension code	.X.	8000
Flange-Ø	D-class	345
Face-to-face dimension	FF	760
Height	H	560
Handwheel-Ø	B	630
Wrench size across flats	S_1	30
Wrench size across flats	S_2	65
Weight	ca. kg	135
Kvs-Value	m^3/h	680
Cv-Value	gal/min	793

Dimensions in mm.

Edition 2022-11

Offshore Valves

Type 01272 - Bellow Sealed Globe Valve

Cryogenic-Bellow Sealed Globe Valve, PN50

Stainless steel body and topwork,
“ live loaded ” gland packing
“ cleaned and degreased for oxygen service "

Part No. 01272.X.002*
* Butt weld connection for stainless steel pipes acc. to ISO 1127 or ASTM A312

Part No. 01272.X.0024
Socket weld connection for stainless steel pipes acc. to ISO 1127 or ASTM A312

Available options - on request only:
· Welded stainless steel stubs acc. to ISO 1127 or ASTM A312 - length FF + 200mm
· Extension H up to 900mm
· Valve with control disc (tapered design)

Applications:
Approved for air gases, vapours and cryogenic liquefied gases incl. LNG.
Working temperature: -255°C / -427°F (18K) up to +120°C / +248°F (393K)
Leak rate:: 10-6 mbar ltr / sec outside, 10-4 mbar ltr / sec seat

Materials		DIN EN	ASTM
1	Body	1.4409	A 351 CF3M
2	Valve seal	PCTFE (Kel-F)	
3	Disc	1.4404	A 276 Grade 316L
4	Bonnet gasket	Graphite	
5	Headpiece	1.4404	A 276 Grade 316L
6	Bellow stem	1.4571	A 313 Grade 316Ti
7	Bolts	1.4401/A4	A 194 B8M
8	Bellow	1.4571	A 313 Grade 316Ti
9	Elongation tube	1.4571	A 313 Grade 316Ti
10	Headpiece	1.4404	A 276 Grade 316L
11	Bush	CW452K	B 159 UNS C51900
12	Stem	1.4404	A 276 Grade 316L
13	Gland packing	Graphite / PTFE / MICA	
14	Gland nut	1.4404	A 276 Grade 316L
15	Handwheel	1.4409	A 351 CF3M

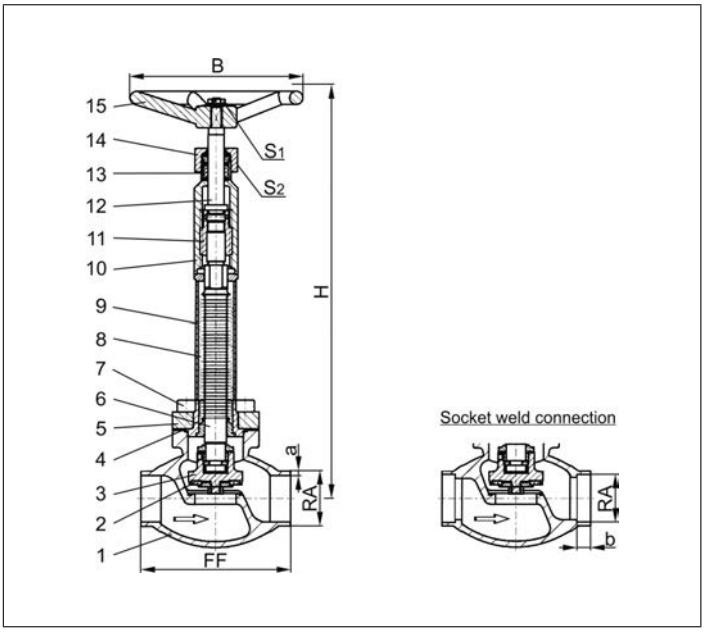

Type 01272 - Standard design	Technical data									
Nominal size	**DN**	**10**	**15**	**15**	**20**	**25**	**32**	**40**	**40**	**50**
Dimension code	.X.	1012	1517	1521	2026	2533	3238	4042	4048	5060
Face-to-face dimension	FF	70	85	85	100	115	115	130	130	155
Height	H	380	380	380	380	380	380	380	380	380
Outside pipe-Ø ISO 1127	RA	12.0	17.2	21.3	26.9	33.7	38.0	42.4	48.3	60.3
Wall thickness pipe ISO 1127	a	1.0	1.6	2.0	2.0	2.0	2.0	2.0	2.0	2.0
Outside pipe-Ø ASTM A312	RA	13.72	17.15	21.34	26.67	33.40	-	42.16	48.26	60.33
Wall thickness pipe ASTM A312	a	dimensions acc. to S10 or S40								
Socket depth	b	6	10	10	13	13	-	13	13	16
Handwheel-Ø	B	150	150	150	150	150	150	150	150	150
Wrench size across flats	S_1	7	7	7	7	7	10	10	10	10
Wrench size across flats	S_2	30	30	30	30	30	36	36	36	36
Weight	ca. kg	1.6	1.85	1.9	2.3	2.7	3.6	5.1	5.1	7.7
Kvs-Value	m^3/h	1.6	2.8	4.3	6.7	11.5	14.0	20.6	22.6	37.1
Cv-Value	gal/min	1.9	3.3	5.0	7.8	13.4	16.2	23.9	26.3	43.2

Dimensions in mm.

Offshore Valves

Type 03272 - Bellow Sealed Globe Valve

Cryogenic-Bellow Sealed Globe Valve, PN40

Stainless steel body and topwork,
" live loaded " gland packing
" cleaned and degreased for oxygen service "

Part No. 03272.X.0022
Flanged connection acc. to DIN EN 1092-1 PN40

Available options - on request only:
· Extension H up to 900mm
· Valve with control disc (tapered design)

Applications:
Approved for air gases, vapours and cryogenic liquefied gases incl. LNG.
Working temperature: -255°C / -427°F (18K) up to +120°C / +248°F (393K)
Leak rate:: 10-6 mbar ltr / sec outside, 10-4 mbar ltr / sec seat

Materials		DIN EN	ASTM
1	Body	1.4409	A 351 CF3M
2	Valve seal	PCTFE (Kel-F)	
3	Disc	1.4404	A 276 Grade 316L
4	Bonnet gasket	Graphite	
5	Headpiece	1.4404	A 276 Grade 316L
6	Bellow stem	1.4571	A 276 Grade 316Ti
7	Bolts	1.4571/A4	similar A 194 B8T
8	Bellow	1.4571	A 313 Grade 316Ti
9	Elongation tube	1.4571	A 313 Grade TP316Ti
10	Headpiece	1.4404	A 276 Grade 316L
11	Bush	CW452K	B 159 UNS C51900
12	Stem	1.4404	A 276 Grade 316L
13	Gland packing	Graphite / PTFE / MICA	
14	Gland nut	1.4404	A 276 Grade 316L
15	Handwheel	1.4409	A 351 CF3M

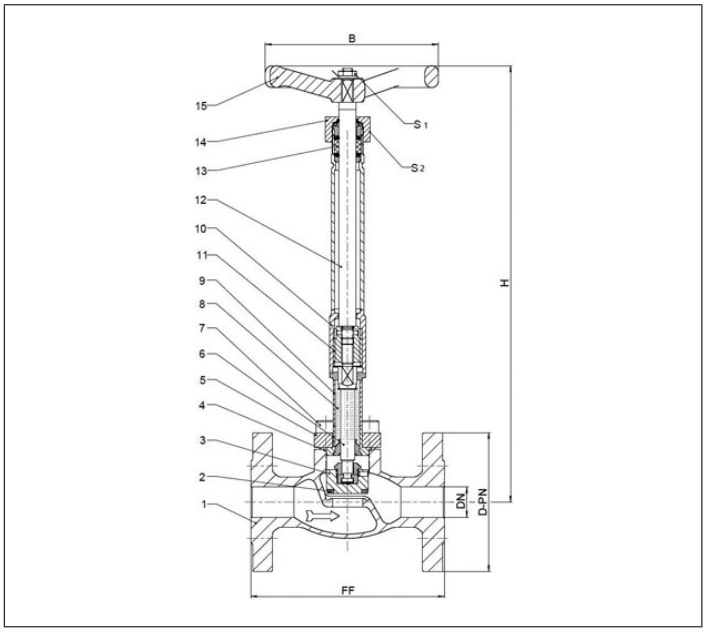

Typ 03272 - Standard design	Technical data					
Nominal size	**DN**	**15**	**20**	**25**	**40**	**50**
Dimension code - Flange EN 1092-1 PN40	.X.	0150	0200	0250	0400	0500
Flange-Ø	D-PN	95	105	115	150	165
Face-to-face dimension	FF	140	150	160	200	230
Height	H	370	370	370	370	370
Handwheel-Ø	B	150	150	150	150	150
Wrench size across flats	S_1	7	7	7	10	10
Wrench size across flats	S_2	30	30	30	36	36
Weight	ca. kg	3.7	5.0	5.4	10.2	13.9
Kvs-Value	m^3/h	4.3	6.7	11.5	22.6	37.1
Cv-Value	gal/min	5.0	7.8	13.4	26.3	43.2
Stroke	mm	7	7	7	15	15

Dimensions in mm.

Edition 2022-11

Offshore Valves

Type 03272 - Bellow Sealed Globe Valve

Cryogenic-Bellow Sealed Globe Valve, class 300

Stainless steel body and topwork,
" live loaded " gland packing
" cleaned and degreased for oxygen service "

Part No. 03272.X.0023
Flanged connection acc. to ANSI B16.5 class 300

Available options - on request only:
· Extension H up to 900mm
· Valve with control disc (tapered design)

Applications:
Approved for air gases, vapours and cryogenic liquefied gases incl. LNG.
Working temperature: -255°C / -427°F (18K) up to +120°C / +248°F (393K)
Leak rate: 10-6 mbar ltr / sec outside, 10-4 mbar ltr / sec seat

Materials		DIN EN	ASTM
1	Body	1.4409	A 351 CF3M
2	Valve seal	PCTFE (Kel-F)	
3	Disc	1.4404	A 276 Grade 316L
4	Bonnet gasket	Graphite	
5	Headpiece	1.4404	A 276 Grade 316L
6	Bellow stem	1.4571	A 276 Grade 316Ti
7	Bolts	1.4571/A4	similar A 194 B8T
8	Bellow	1.4571	A 313 Grade 316Ti
9	Elongation tube	1.4571	A 313 Grade TP316Ti
10	Headpiece	1.4404	A 276 Grade 316L
11	Bush	CW452K	B 159 UNS C51900
12	Stem	1.4404	A 276 Grade 316L
13	Gland packing	Graphite / PTFE / MICA	
14	Gland nut	1.4404	A 276 Grade 316L
15	Handwheel	1.4409	A 351 CF3M

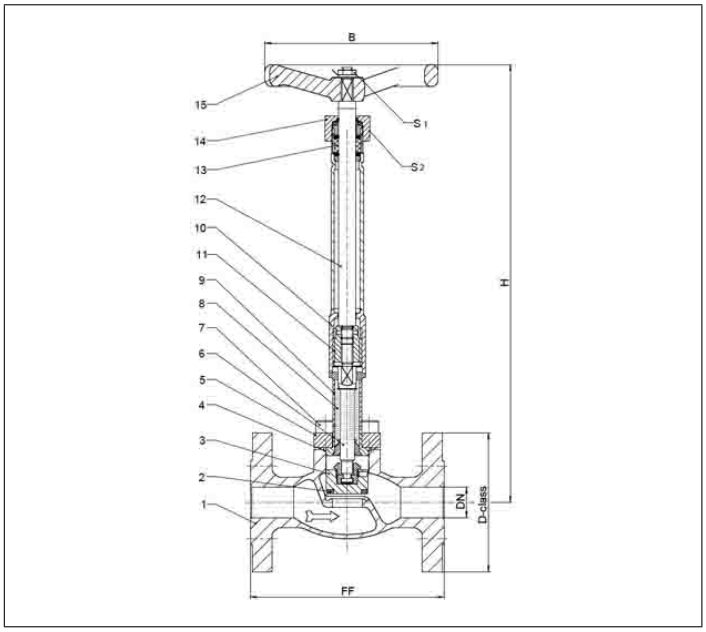

Typ 03272 - Standard design	Technical data					
Nominal size	**DN**	**15**	**20**	**25**	**40**	**50**
Dimension code - Flange ANSI B16.5 class 300	.X.	0400	0600	1000	1400	2000
Flange-Ø	D-class	95	115	125	155	165
Face-to-face dimension	FF	140	150	160	200	230
Height	H	370	370	370	370	370
Handwheel-Ø	B	150	150	150	150	150
Wrench size across flats	S_1	7	7	7	10	10
Wrench size across flats	S_2	30	30	30	36	36
Weight	ca. kg	3.7	5.0	5.4	10.2	13.9
Kvs-Value	m^3/h	4.3	6.7	11.5	22.6	37.1
Cv-Value	gal/min	5.0	7.8	13.4	26.3	43.2
Stroke	mm	7	7	7	15	15

Abmessungen in mm.

Offshore Valves

Type 03272 - Bellow Sealed Globe Valve

Cryogenic-Bellow Sealed Globe Valve, class 150

Stainless steel body and topwork,
" live loaded " gland packing
" cleaned and degreased for oxygen service "

Part No. 03272.X.0021
Flanged connection acc. to ANSI B16.5 class 150

Available options - on request only:
· Extension H up to 900mm
· Valve with control disc (tapered design)

Applications:
Approved for air gases, vapours and cryogenic liquefied gases incl. LNG.
Working temperature: -255°C / -427°F (18K) up to +120°C / +248°F (393K)
Leak rate: 10-6 mbar ltr / sec outside, 10-4 mbar ltr / sec seat

Materials		DIN EN	ASTM
1	Body	1.4409	A 351 CF3M
2	Valve seal	PCTFE (Kel-F)	
3	Disc	1.4404	A 276 Grade 316L
4	Bonnet gasket	Graphite	
5	Headpiece	1.4404	A 276 Grade 316L
6	Bellow stem	1.4571	A 276 Grade 316Ti
7	Bolts	1.4571/A4	similar A 194 B8T
8	Bellow	1.4571	A 313 Grade 316Ti
9	Elongation tube	1.4571	A 313 Grade TP316Ti
10	Headpiece	1.4404	A 276 Grade 316L
11	Bush	CW452K	B 159 UNS C51900
12	Stem	1.4404	A 276 Grade 316L
13	Gland packing	Graphite / PTFE / MICA	
14	Gland nut	1.4404	A 276 Grade 316L
15	Handwheel	1.4409	A 351 CF3M

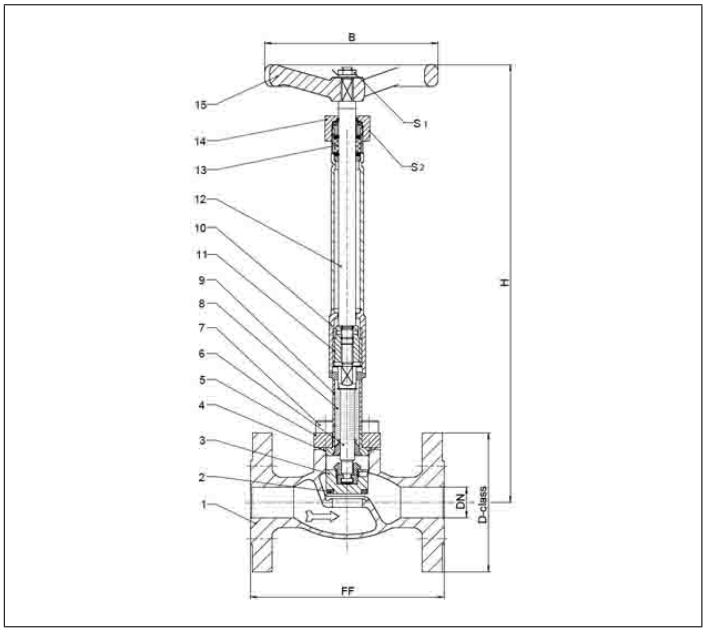

Typ 03272 - Standard design	Technical data					
Nominal size	**DN**	**15**	**20**	**25**	**40**	**50**
Dimension code - Flange ANSI B16.5 class 150	.X.	0400	0600	1000	1400	2000
Flange-Ø	D-class	90	100	110	125	150
Face-to-face dimension	FF	140	150	160	200	230
Height	H	370	370	370	370	370
Handwheel-Ø	B	150	150	150	150	150
Wrench size across flats	S_1	7	7	7	10	10
Wrench size across flats	S_2	30	30	30	36	36
Weight	ca. kg	3.7	5.0	5.4	10.2	13.9
Kvs-Value	m^3/h	4.3	6.7	11.5	22.6	37.1
Cv-Value	gal/min	5.0	7.8	13.4	26.3	43.2
Stroke	mm	7	7	7	15	15

Abmessungen in mm.

Edition 2022-11

Offshore Valves
Type 01470 - Globe Valve

Top Entry Cryogenic-Globe Valves, PN50 (DN100=PN40)

Stainless steel body and topwork,
" live loaded " gland packing
" cleaned and degreased for oxygen service "

Part No. 01470.X.0*8*
Butt weld connection for stainless steel pipes acc. to ISO 1127 or ASTM A312

Available options - on request only:
· Extension H and E acc. to customer specification
· Valve with check disc

Applications:
Approved for air gases, vapours and cryogenic liquefied gases incl. LNG.
Working temperature: -255°C / -427°F (18K) up to +120°C / +248°F (393K)

Materials		DIN EN	ASTM
1	Body	1.4409	A 351 CF3M
2	Valve seal	PCTFE	
3	Disc	1.4404	A 276 Grade 316L
4	Guide bush	CW453K	B 103 UNS C52100
5	Stem	1.4404	A 276 Grade 316L
6	Elongation tube	1.4571	A 213TP 316Ti
7	Elongation tube	1.4571	A 213TP 316Ti
8	Cold box feature	1.4571	A 213TP 316Ti
9	Headpiece flange	1.4404	A 276 Grade 316L
10	Headpiece	1.4404	A 276 Grade 316L
11	Bolts	1.4571/A4	similar A 193 B8T
12	Gland packing	Graphite / PTFE / MICA	
13	Gland nut	1.4404	A 276 Grade 316L
14	Handwheel	1.4409	A 351 CF3M

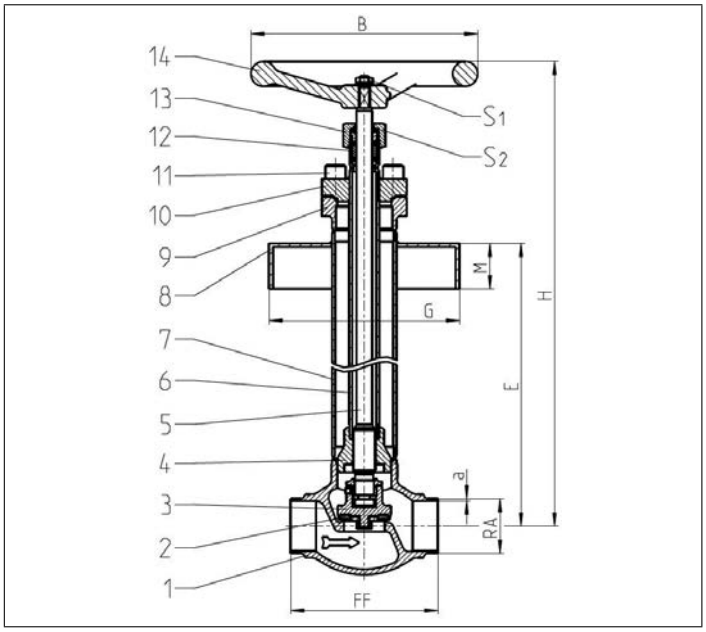

Type 01470 - Standard design	Technical data									
Nominal size	**DN**	**10**	**15**	**20**	**25**	**40**	**50**	**65**	**80**	**100**
Dimension code	.X.	1013	1521	2026	2533	4048	5060	6573	8088	0114
Face-to-face dimension	FF	70	85	100	115	130	155	205	245	280
Height	H	690	690	690	690	710	780	790	840	960
Handwheel-Ø	B	100	100	100	100	200	200	250	315	315
Outside pipe -Ø ASTM A312	RA	13.50	21.34	26.67	33.40	48.26	60.33	73.02	88.90	114.30
Wall thickness pipe ASTM A312	a	dimensions acc. to S10 or S40								
Length	A	540	540	540	540	540	610	610	640	750
Length	G	acc. to customer specification								
Length	M	acc. to customer specification								
Wrench size across flats	S_1	10	10	10	10	13	13	13	13	13
Wrench size across flats	S_2	27	27	27	27	32	32	41	41	41
Weight	ca. kg	4.0	4.0	4.8	5.1	9.1	11.5	19.6	26.9	37.4
Kvs-Value	m^3/h	1.6	4.3	6.7	11.5	22.6	37.1	71.1	104.0	168.0
Cv-Value	gal/min	1.9	5.0	7.8	13.4	26.3	43.2	82.9	121.3	196.0
Stroke	mm	11	12	12	12	15	19	23	25	30

Dimensions in mm.

Offshore Valves

Type 01743 - Actuated Globe Valve

Cryogenic-Globe Valves with Pneumatic Actuator, PN50 (DN65=PN45, DN150=PN40)

Stainless steel body and topwork
Actuator - air opens, spring closes or contrary
“ live loaded ” gland packing
“ cleaned and degreased for oxygen service " - the actuator is not cleaned and degreased for oxygen

Part No. 01743.X.*01*
Butt weld connection for stainless steel pipes acc. to ISO 1127 or ASTM A312

Part No. 01743.X.*014
Socket weld connection for stainless steel pipes acc. to ISO 1127 or ASTM A312

Available accessories:
· Solenoid valve · Limit switch
· Electropneumatic positioner etc.

Available options - on request only:
· Welded stainless steel stubs acc. to ISO 1127 or ASTM A312 - length FF + 200mm
· Actuator “ cleaned and degreased for oxygen sevice ”
· Electric actuator · Valve with check disc, valve with control disc (tapered design)

Applications:
Approved for air gases, vapours and cryogenic liquefied gases incl. LNG.
Working temperature: -255°C / -427°F (18K) up to +120°C / +248°F (393K)

Materials		DIN EN	ASTM
1	Body	1.4409	A 351 CF3M
2	Valve seal	PCTFE (Kel-F)	
3	Disc	1.4404	A 276 Grade 316L
4	Bonnet gasket	Graphite	
5	Headpiece	1.4404	A 276 Grade 316L
6	Bolts	1.4571/A4	similar A 194 B8T
7	Elongation tube	1.4571	A 213 TP 316Ti
8	Stem	1.4404	A 276 Grade 316L
9	Gland packing	Graphite / PTFE / MICA	
10	Gland nut	1.4404	A 276 Grade 316L
11	Pillars	1.4404	A 276 Grade 316L
12	Bush	CW452K	B 159 UNS C51900

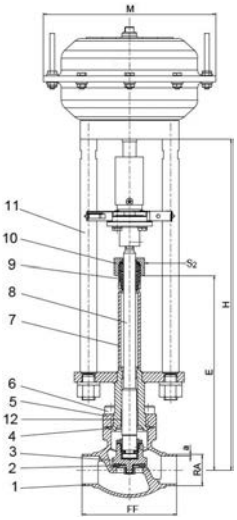

KOREA GAS SAFETY CORPORATION

Type 01743 - Standard design	Technical data													
Nominal size	**DN**	**10**	**15**	**15**	**20**	**25**	**32**	**40**	**40**	**50**	**65**	**80**	**100**	**150**
Dimension code	.X.	1012	1517	1521	2026	2533	3238	4042	4048	5060	657x	8088	0114	0168
Face-to-face dimension	FF	70	85	85	100	115	115	130	130	155	205	245	280	400
Height	H	370	370	370	370	375	405	420	420	425	510	575	635	685
Length	E	195	195	195	200	200	230	230	230	235	300	300	300	300
Outside pipe-Ø ISO 1127	RA	12.0	17.2	21.3	26.9	33.7	38.0	42.4	48.3	60.3	76.1	88.9	114.3	168.3
Wall thickness pipe ISO 1127	a	1.0	1.6	2.0	2.0	2.0	2.0	2.0	2.0	2.0	2.9	3.2	6.0	7.1
Outside pipe-Ø ASTM A312	RA	13.72	17.15	21.34	26.67	33.40	-	42.16	48.26	60.33	73.03	88.90	114.3	168.3
Wall thickness pipe ASTM A312	a	dimensions acc. to S10 or S40												
Socket depth	b	6	10	10	13	13	-	13	13	16	16	16	20	20
Actuator-Ø	M	dependent on actuator												
Wrench size across flats	S_2	30	30	30	30	30	36	36	36	36	36	36	41	41
Weight w/o actuator	ca. kg	1.9	2.15	2.2	2.4	3.1	3.8	6.5	6.5	9.0	15.2	20.0	28.0	60.9
*Kvs-Value	m^3/h	1.6	3.8	4.3	6.7	11.5	14.0	20.6	22.6	37.1	71.1	104.0	170.0	350.0
*Cv-Value	gal/min	1.9	4.4	5.0	7.8	13.4	16.2	23.9	26.3	43.2	82.9	121.3	198.3	408.4
Stroke	mm	10	10	10	7	9	9	11	11	15	23	23	30	40

Dimensions in mm. Compliance of tightness requirements acc. to EN 1626 for DN150 up to 20 bar differential pressure. In the range of >20-40 bar, 350-700ml per second (1 bar, 20°C [68°F]) are reached. * These figures refer to measurements for the flow direction.

Edition 2022-11

Offshore Valves

Type 01743 - Actuated Globe Valve

Cryogenic-Globe Valves with Pneumatic Actuator, PN25

Stainless steel body and topwork
Actuator - air opens, spring closes or contrary
" live loaded " gland packing

Part No. 01743.0219.*01*
Butt weld connection for stainless steel pipes acc. to ISO 1127 or ASTM A312
Part No. 01743.0219.*014
Socket weld connection for stainless steel pipes acc. to ISO 1127 or ASTM A312

In flow direction, the valve with the nominal size DN200 is conform to tightness class L1 up to 18 bar maximum differential pressure acc. to DIN 12567 for LNG use. This standard can also be used for the tightness class of other cryogenic gases.

Available accessories/options - on request only:
· Solenoid valve · Limit switch · Electropneumatic positioner etc.
· Welded stainless steel stubs acc. to ISO 1127 or ASTM A312
· Actuator " cleaned and degreased for oxygen service "
· Valve with check or control disc (tapered design)

Applications:
Approved for air gases, vapours and cryogenic liquefied gases incl. LNG.
Working temperature: -196°C / -321°F (77K) up to +120°C / +248°F (393K)

Materials		DIN EN	ASTM
1	Body	1.4409	A 351 CF3M
2	Valve seal	PCTFE (Kel-F)	
3	Disc	1.4404	A 276 Grade 316L
4	Bonnet gasket	Graphite	
5	Headpiece	1.4404	A 276 Grade 316L
6	Bolts	1.4571/A4	similar A 194 B8T
7	Elongation tube	1.4571	A 213 TP 316Ti
8	Stem	1.4404	A 276 Grade 316L
9	Gland packing	Graphite / PTFE / MICA	
10	Gland nut	1.4404	A 276 Grade 316L
11	Pillars	1.4404	A 276 Grade 316L
12	Bush	CW452K	B 159 UNS C51900

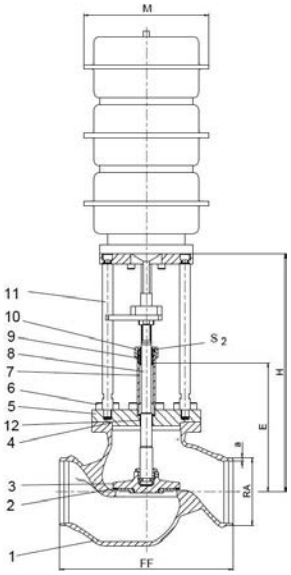

KOREA GAS SAFETY CORPORATION

Type 01743 - Standard design	Technical data	
Nominal size	**DN**	**200**
Face-to-face dimension	FF	560
Height	H	785
Length	E	410
Outside pipe-Ø ISO 1127	RA	219.1
Wall thickness pipe ISO 1127	a	6.3
Outside pipe-Ø ASTM A312	RA	219.1
Wall thickness pipe ASTM A312	a	dimensions acc. to S10 or S40
Socket depth	b	15
Actuator-Ø	M	depent on actuator
Wrench size across flats	S_2	65
Weight w/o actuator	ca. kg	165.0
*Kvs-Value	m^3/h	680.0
*Cv-Value	gal/min	793.0
Stroke	mm	60

Dimensions in mm. * These figures refer to measurements for the flow direction.

Offshore Valves

Type 03743 - Actuated Globe Valve

Cryogenic-Globe Valves with Pneumatic Actuator, PN16

Stainless steel body and topwork
Actuator - air opens, spring closes or contrary
" live loaded " gland packing
" cleaned and degreased for oxygen service " - the actuator is not cleaned and degreased for oxygen
Part No. 03743.X.*014
Flanged connection acc. to DIN EN 1092-1 PN16

Available accessories:
· Solenoid valve
· Limit switch
· Electropneumatic positioner etc.

Available options - on request only:
· Actuator - " cleaned and degreased for oxygen service "
· Electric actuator
· Valve with check disc
· Valve with control disc (tapered design)

Applications:
Approved for air gases, vapours and cryogenic liquefied gases incl. LNG.
Working temperature: -255°C / -427°F (18K) up to +120°C / +248°F (393K)

Materials		DIN EN	ASTM
1	Body	1.4409	A 351 CF3M
2	Valve seal	PCTFE (Kel-F)	
3	Disc	1.4404	A 276 Grade 316L
4	Bonnet gasket	Graphite	
5	Headpiece	1.4404	A 276 Grade 316L
6	Bolts	1.4571/A4	similar A 194 B8T
7	Elongation tube	1.4571	A 213 TP 316Ti
8	Stem	1.4404	A 276 Grade 316L
9	Gland packing	Graphite / PTFE / MICA	
10	Gland nut	1.4404	A 276 Grade 316L
11	Pillars	1.4404	A 276 Grade 316L
12	Bush	CW452K	B 159 UNS C51900

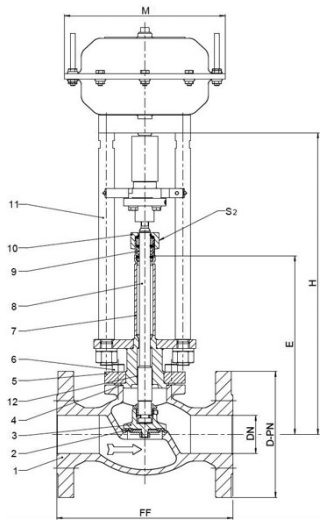

KOREA GAS SAFETY CORPORATION

Type 03743 - Standard design	Technical data									
Nominal size	**DN**	**15**	**20**	**25**	**40**	**50**	**65**	**80**	**100**	**150**
Dimension code - Flange EN 1092-1 PN16	.X.	0150	0200	0250	0400	0500	0650	0800	1000	1500
Flange-Ø	D-PN	95	105	115	150	165	185	200	220	285
Face-to-face dimension	FF	140	150	160	200	230	295	310	350	510
Height	H	370	370	375	420	425	510	575	635	685
Length	E	195	200	200	230	235	300	300	300	350
Actuator-Ø	M	dependent on actuator								
Wrench size across flats	S_2	30	30	30	36	36	36	36	41	41
Weight w/o actuator	ca. kg	4.6	6.5	8.5	12.0	16.0	30.0	36.0	53.0	87.0
*Kvs - Value	m^3/h	4.3	6.7	11.5	22.6	37.1	71.1	104.0	170.0	350.0
*Cv - Value	gal/min	5.0	7.8	13.4	26.3	43.2	82.9	121.3	198.3	408.4
Stroke	mm	10	7	9	11	15	23	23	30	30

Dimensions in mm. Compliance of tightness requirements acc. to EN 1626 for DN150 up to 20 bar differential pressure. In the range of >20-40 bar, 350-700ml per second (1 bar, 20°C [68°F]) are reached. * These figures refer to measurements for the flow direction.

Edition 2022-11

Offshore Valves

Type 03743 - Actuated Globe Valve

Cryogenic-Globe Valves with Pneumatic Actuator, PN40

Stainless steel body and topwork
Actuator - air opens, spring closes or contrary
" live loaded " gland packing
" cleaned and degreased for oxygen service " - the actuator is not cleaned and degreased for oxygen
Part No. 03743.X.*012
Flanged connection acc. to DIN EN 1092-1 PN40

Available accessories:
· Solenoid valve
· Limit switch
· Electropneumatic positioner etc.

Available options - on request only:
· Actuator - " cleaned and degreased for oxygen service "
· Electric actuator
· Valve with check disc
· Valve with control disc (tapered design)

Applications:
Approved for air gases, vapours and cryogenic liquefied gases incl. LNG.
Working temperature: -255°C / -427°F (18K) up to +120°C / +248°F (393K)

Materials		DIN EN	ASTM
1	Body	1.4409	A 351 CF3M
2	Valve seal	PCTFE (Kel-F)	
3	Disc	1.4404	A 276 Grade 316L
4	Bonnet gasket	Graphite	
5	Headpiece	1.4404	A 276 Grade 316L
6	Bolts	1.4571/A4	similar A 194 B8T
7	Elongation tube	1.4571	A 213 TP 316Ti
8	Stem	1.4404	A 276 Grade 316L
9	Gland packing	Graphite / PTFE / MICA	
10	Gland nut	1.4404	A 276 Grade 316L
11	Pillars	1.4404	A 276 Grade 316L
12	Bush	CW452K	B 159 UNS C51900

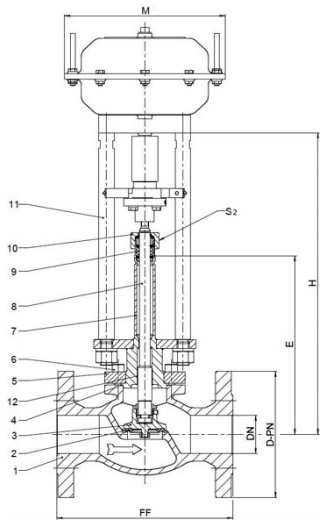

KOREA GAS SAFETY CORPORATION

Type 03743 - Standard design	Technical data									
Nominal size	**DN**	**15**	**20**	**25**	**40**	**50**	**65**	**80**	**100**	**150**
Dimension code - Flange EN 1092-1 PN40	.X.	0150	0200	0250	0400	0500	0650	0800	1000	1500
Flange-Ø	D-PN	95	105	115	150	165	185	200	235	300
Face-to-face dimension	FF	140	150	160	200	230	290	310	350	550
Height	H	370	370	375	420	425	510	575	635	685
Length	E	195	200	200	230	235	300	300	300	300
Actuator-Ø	M	dependent on actuator								
Wrench size across flats	S_2	30	30	30	36	36	36	36	41	41
Weight w/o actuator	ca. kg	4.6	6.5	8.5	12.0	16.0	30.0	36.0	53.0	100.0
*Kvs - Value	m^3/h	4.3	6.7	11.5	22.6	37.1	71.1	104.0	170.0	350.0
*Cv - Value	gal/min	5.0	7.8	13.4	26.3	43.2	82.9	121.3	198.3	408.4
Stroke	mm	10	7	9	11	15	23	23	30	40

Dimensions in mm. Compliance of tightness requirements acc. to EN 1626 for DN150 up to 20 bar differential pressure. In the range of >20-40 bar, 350-700ml per second (1 bar, 20°C [68°F]) are reached. * These figures refer to measurements for the flow direction.

Offshore Valves

Type 03743 - Actuated Globe Valve

Cryogenic-Globe Valves with Pneumatic Actuator, class 300

Stainless steel body and topwork
Actuator - air opens, spring closes or contrary
" live loaded " gland packing
" cleaned and degreased for oxygen service " - the actuator is not cleaned and degreased for oxygen
Part No. 03743.X.*013
Flanged connection acc. to ANSI B16.5 class 300

Available accessories:
· Solenoid valve
· Limit switch
· Electropneumatic positioner etc.

Available options - on request only:
· Actuator - " cleaned and degreased for oxygen service "
· Electric actuator
· Valve with check disc
· Valve with control disc (tapered design)

Applications:
Approved for air gases, vapours and cryogenic liquefied gases incl. LNG.
Working temperature: -255°C / -427°F (18K) up to +120°C / +248°F (393K)

Materials		DIN EN	ASTM
1	Body	1.4409	A 351 CF3M
2	Valve seal	PCTFE (Kel-F)	
3	Disc	1.4404	A 276 Grade 316L
4	Bonnet gasket	Graphite	
5	Headpiece	1.4404	A 276 Grade 316L
6	Bolts	1.4571/A4	similar A 194 B8T
7	Elongation tube	1.4571	A 213 TP 316Ti
8	Stem	1.4404	A 276 Grade 316L
9	Gland packing	Graphite / PTFE / MICA	
10	Gland nut	1.4404	A 276 Grade 316L
11	Pillars	1.4404	A 276 Grade 316L
12	Bush	CW452K	B 159 UNS C51900

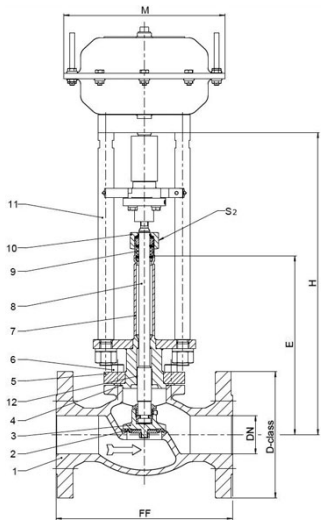

KOREA GAS SAFETY CORPORATION

Type 03743 - Standard design	Technical data									
Nominal size	**DN**	**15**	**20**	**25**	**40**	**50**	**65**	**80**	**100**	**150**
Dimension code - Flannge ANSI B16.5 class 300	.X.	0400	0600	1000	1400	2000	2400	3000	4000	6000
Flange-Ø	D-class	95	115	125	155	165	190	210	255	320
Face-to-face dimension	FF	140	150	160	200	230	290	310	350	597
Height	H	370	370	375	420	425	510	575	635	685
Length	E	195	200	200	230	235	300	300	300	300
Actuator-Ø	M	dependent on actuator								
Wrench size across flats	S_2	30	30	30	36	36	36	36	41	41
Weight w/o actuator	ca. kg	4.6	6.5	8.5	12.0	16.0	30.0	36.0	53.0	100.0
*Kvs-Value	m^3/h	4.3	6.7	11.5	22.6	37.1	71.1	104.0	170.0	350.0
*Cv-Value	gal/min	5.0	7.8	13.4	26.3	43.2	82.9	121.3	198.3	408.4
Stroke	mm	10	7	9	11	15	23	23	30	40

Dimensions in mm. Compliance of tightness requirements acc. to EN 1626 for DN150 up to 20 bar differential pressure. In the range of >20-40 bar, 350-700ml per second (1 bar, 20°C [68°F]) are reached. * These figures refer to measurements for the flow direction.

Edition 2022-11

Offshore Valves

Type 03743 - Actuated Globe Valve

Cryogenic-Globe Valves with Pneumatic Actuator, class 150

Stainless steel body and topwork
Actuator - air opens, spring closes or contrary
" live loaded " gland packing
" cleaned and degreased for oxygen service " - the actuator is not cleaned and degreased for oxygen
Part No. 03743.X.*011
Flanged connection acc. to ANSI B16.5 class 150

Available accessories:
· Solenoid valve
· Limit switch
· Electropneumatic positioner etc.

Available options - on request only:
· Actuator - " cleaned and degreased for oxygen service "
· Electric actuator
· Valve with check disc
· Valve with control disc (tapered design)

Applications:
Approved for air gases, vapours and cryogenic liquefied gases incl. LNG.
Working temperature: -255°C / -427°F (18K) up to +120°C / +248°F (393K)

Materials		DIN EN	ASTM
1	Body	1.4409	A 351 CF3M
2	Valve seal	PCTFE (Kel-F)	
3	Disc	1.4404	A 276 Grade 316L
4	Bonnet gasket	Graphite	
5	Headpiece	1.4404	A 276 Grade 316L
6	Bolts	1.4571/A4	similar A 194 B8T
7	Elongation tube	1.4571	A 213 TP 316Ti
8	Stem	1.4404	A 276 Grade 316L
9	Gland packing	Graphite / PTFE / MICA	
10	Gland nut	1.4404	A 276 Grade 316L
11	Pillars	1.4404	A 276 Grade 316L
12	Bush	CW452K	B 159 UNS C51900

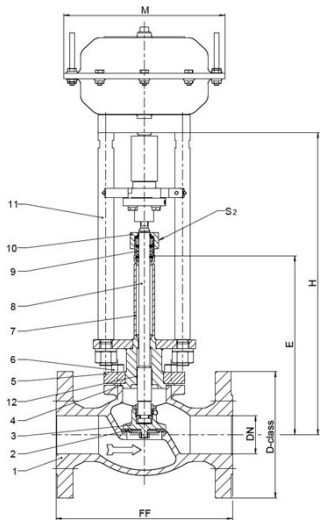

KOREA GAS SAFETY CORPORATION

Type 03743 - Standard design	Technical data									
Nominal size	**DN**	**15**	**20**	**25**	**40**	**50**	**65**	**80**	**100**	**150**
Dimension code - Flannge ANSI B16.5 class 150	.X.	0400	0600	1000	1400	2000	2400	3000	4000	6000
Flange-Ø	D-class	90	100	110	125	150	180	190	230	280
Face-to-face dimension	FF	140	150	160	200	230	290	310	350	577
Height	H	370	370	375	420	425	510	575	635	685
Length	E	195	200	200	230	235	300	300	300	300
Actuator-Ø	M	dependent on actuator								
Wrench size across flats	S_2	30	30	30	36	36	36	36	41	41
Weight w/o actuator	ca. kg	4.6	6.5	8.5	12.0	16.0	30.0	36.0	53.0	87.0
*Kvs-Value	m^3/h	4.3	6.7	11.5	22.6	37.1	71.1	104.0	170.0	350.0
*Cv-Value	gal/min	5.0	7.8	13.4	26.3	43.2	82.9	121.3	198.3	408.4
Stroke	mm	10	7	9	11	15	23	23	30	40

Dimensions in mm. Compliance of tightness requirements acc. to EN 1626 for DN150 up to 20 bar differential pressure. In the range of >20-40 bar, 350-700ml per second (1 bar, 20°C [68°F]) are reached. * These figures refer to measurements for the flow direction.

Offshore Valves

Type 03743 - Actuated Globe Valve

Cryogenic-Globe Valves with Pneumatic Actuator, class 150

Stainless steel body and topwork
Actuator - air opens, spring closes or contrary
" live loaded " gland packing

Part No. 03743.8000.X
Flanged connection acc. to ANSI B16.5 class 300

In flow direction, the valve with the nominal size DN200 is conform to tightness class L1 up to 18 bar maximum differential pressure acc. to DIN 12567 for LNG use.
This standard can also be used for the tightness class of other cryogenic gases.

Available accessories:
· Solenoid valve
· Limit switch
· Electropneumatic positioner etc.
Available options - on request only:
· Actuator - " cleaned and degreased for oxygen service "
· Electric actuator
· Valve with check or control disc (tapered design)

Applications:
Approved for air gases, vapours and cryogenic liquefied gases incl. LNG.
Working temperature: -196°C / -321°F (77K) up to +120°C / +248°F (393K)

Materials		DIN EN	ASTM
1	Body	1.4409	A 351 CF3M
1a	Flange	1.4404	A 276 Grade 316L
2	Valve seal	PCTFE (Kel-F)	
3	Disc	1.4404	A 276 Grade 316L
4	Bonnet gasket	Graphite	
5	Headpiece	1.4404	A 276 Grade 316L
6	Bolts	1.4571/A4	similar A 194 B8T
7	Elongation tube	1.4571	A 213 TP 316Ti
8	Stem	1.4404	A 276 Grade 316L
9	Gland packing	Graphite / PTFE / MICA	
10	Gland nut	1.4404	A 276 Grade 316L
11	Pillars	1.4404	A 276 Grade 316L
12	Bush	CW452K	B 159 UNS C51900

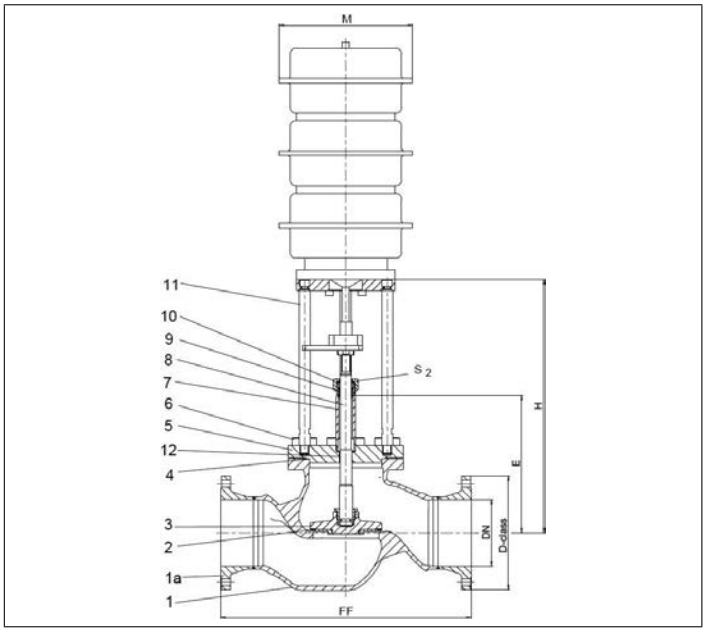

KOREA GAS SAFETY CORPORATION

Type 03743 - Standard design	Technical data	
Nominal size	**DN**	**200**
Dimension code	.X.	8000
Flange-Ø	D-class	345
Face-to-face dimension	FF	760
Height	H	785
Length	E	410
Actuator-Ø	M	dependent on actuator
Wrench size across flats	S_2	30
Weight w/o actuator	ca. kg	135
*Kvs-Value	m^3/h	680
*Cv-Value	gal/min	793
Stroke	mm	60

Dimensions in mm. * These figures refer to measurements for the flow direction.

Edition 2022-11

Offshore Valves

Type 01473 - Actuated Globe Valve

Top Entry Cryogenic-Globe Valves with Pneumatic Actuator, PN50 (DN100=PN40)

Stainless steel body and topwork
" live loaded " gland packing
" cleaned and degreased for oxygen service " - the actuator is not cleaned and degreased for oxygen

Part No. 01473.X.3081
Butt weld connection for stainless steel pipes acc. to ISO 1127 or ASTM A312

Available accessories/options - on request only:
· Solenoid valve · Limit switch · Electropneumatic positioner etc.
· Extension H and A acc. to customer specification
· Actuator " cleaned and degreased for oxygen service "
· Valve with check disc, valve with control disc (tapered design)

Applications:
Approved for air gases, vapours and cryogenic liquefied gases incl. LNG.
Working temperature: -255°C / -427°F (18K) up to +120°C / +248°F (393K)

Materials		DIN EN	ASTM
1	Body	1.4409	A 351 CF3M
2	Valve seal	PCTFE	
3	Disc	1.4404	A 276 Grade 316L
4	Guide bush	CW453K	B 103 UNS C52100
5	Stem	1.4404	A 276 Grade 316L
6	Elongation tube	1.4571	A 213TP 316Ti
7	Elongation tube	1.4571	A 213TP 316Ti
8	Cold box feature	1.4571	A 213TP 316Ti
9	Headpiece flange	1.4404	A 276 Grade 316L
10	Headpiece	1.4404	A 276 Grade 316L
11	Bolts	1.4571/A4	similar A 193 B8T
12	Gland packing	Graphite / PTFE / MICA	
13	Gland nut	1.4404	A 276 Grade 316L
14	Pillars	1.4404	A 276 Grade 316L

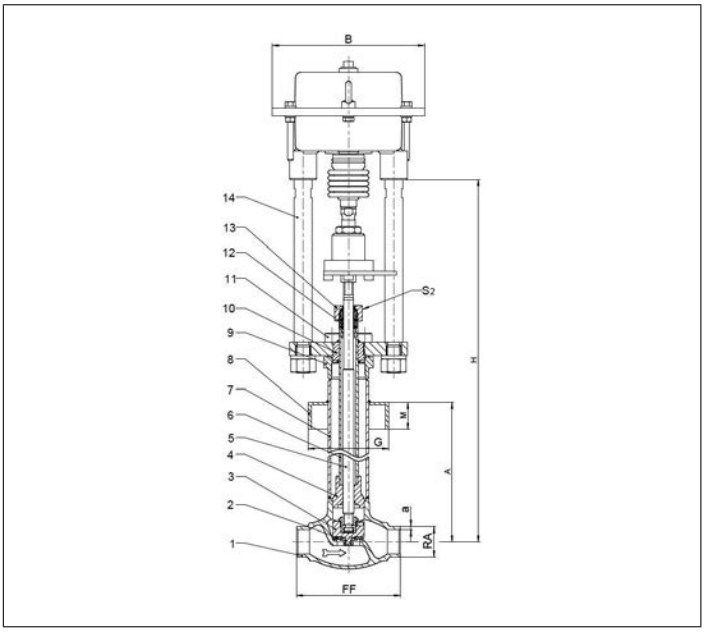

Type 01473 - Standard design	Technical data									
Nominal size	**DN**	**10**	**15**	**20**	**25**	**40**	**50**	**65**	**80**	**100**
Dimension code	.X.	1013	1521	2026	2533	4048	5060	6573	8088	0114
Face-to-face dimension	FF	70	85	100	115	130	155	205	245	280
Height	H	770	785	790	790	820	910	1105	1110	1290
Actuator-Ø	B	dependent on actuator								
Outside pipe-Ø ASTM A312	RA	13.50	21.34	26.67	33.40	48.26	60.33	73.00	89.00	114.30
Wall thickness pipe ASTM A312	a	dimensions acc. to S10 or S40								
Length	A	540	540	540	540	540	610	610	640	750
Length	G	acc. to customer specification								
Length	M	acc. to customer specification								
Wrench size across flats	S_2	27	27	27	27	32	32	41	41	41
Stroke	mm	10	10	7	9	11	15	23	23	30
Weight without actuator	ca. kg	5.7	5.5	6.0	7.0	10.0	11.5	28.3	34.3	49.2
*Kvs-Value	m^3/h	1.6	4.3	6.7	11.5	20.6	37.1	71.1	104.0	168.0
*Cv-Value	gal/min	1.9	5.0	7.8	13.4	23.9	43.2	82.9	121.3	196.0

Dimensions in mm. * These figures refer to measurements for the flow direction.

Offshore Valves

Type 01753 - Actuated Trailervalve

Cryogenic-Globe Valves with Pneumatic Actuator, PN50 (DN65=PN45)

air pressure for operation 6.0 bar g (maximum 10.0 bar g), push-in connection 8mm
Stainless steel body and topwork,
Actuator - air opens, spring closes
“ live loaded ” gland packing
“ cleaned and degreased for oxygen service " - the actuator is not cleaned and degreased for oxygen
maximum working pressure of the valve depending on nominal size

Part No. 01753.X.T0**
* Butt weld connection for stainless steel pipes acc. to ISO 1127 or ASTM A312
Part No. 01753.X.T0*4
Socket weld connection for stainless steel pipes acc. to ISO 1127 or ASTM A312

Available options - on request only:
· Welded stainless steel stubs acc. to ISO 1127 or ASTM A312 - length FF + 200mm
· Weather protection hood

Applications:
Approved for air gases, vapours and cryogenic liquefied gases incl. LNG.
Working temperature: -255°C / -427°F (18K) up to +120°C / +248°F (393K)
Ambient temperature actuator: -50°C / -58°F (223K) up to +70°C / +158°F (343K)

Materials		DIN EN	ASTM
1	Body	1.4409	A 351 CF3M
2	Valve seal	PCTFE (Kel-F)	
3	Disc	1.4404	A 276 Grade 316L
4	Bonnet gasket	Graphite	
5	Headpiece	1.4404	A 276 Grade 316L
6	Bolts	1.4571/A4	similar A 194
7	Elongation tube	1.4571	A 213 TP 316Ti
8	Stem	1.4404	A 276 Grade 316L
9	Spring	1.4571	A 313 Grade 316Ti
10	Flange	1.4404	A 276 Grade 316L
11	Headpiece	1.4404	A 276 Grade 316L
12	Gland packing	Graphite / PTFE / MICA	
13	Gland nut	1.4571	A 313 Grade 316Ti
14	Pillars	1.4404	A 276 Grade 316L
15	Bush	CW452K	B 159 UNS C51900
16	Actuator	Rubber	

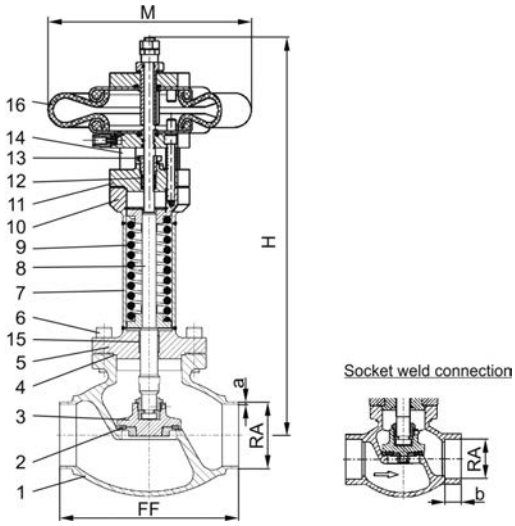

Type 01753 - Standard design	Technical data								
Nominal size	**DN**	**20**	**20**	**25**	**40**	**40**	**50**	**65**	**80**
Dimension code	.X.	2021	2026	2533	4042	4048	5060	657x	8088
Face-to-face dimension	FF	100	100	115	130	130	155	205	245
Height	H	443	443	444	441	441	420	448	467
Outside pipe-Ø ISO 1127	RA	21.3	26.9	33.7	42.4	48.3	60.3	76.1	88.9
Wall thickness pipe ISO 1127	a	2.0	2.0	2.0	2.0	2.0	2.0	2.9	3.2
Outside pipe-Ø ASTM A312	RA	21.34	26.67	33.40	42.16	48.26	60.33	73.03	88.90
Wall thickness pipe ASTM A312	a	dimensions acc. to S10 or S40							
Socket depth	b	10	10	13	13	13	16	16	16
Actuator-Ø	M	229	229	229	229	229	229	229	229
Weight	ca. kg	7.2	7.2	9.1	10.5	10.5	14.5	17.4	22.5
*Kvs-Value	m^3/h	4.3	4.3	11.5	22.6	22.6	37.1	71.1	104.0
*Cv-Value	gal/min	5.0	5.0	13.4	23.9	26.3	43.2	82.9	121.3
Stroke	mm	10	10	14	14	14	14	22	25
Δ P max	bar	50	50	50	16	16	10	3	4
Δ P max with special spring	bar	-	-	-	31	31	18	10	-

Dimensions in mm. * These figures refer to measurements for the flow direction.

Edition 2022-11

Type 27521 - Pneumatic Actuator - Globe Valve (on/off)

Pneumatic Actuators for Globe Valves (on/off)
Actuator - air to open, **spring to close**
maximum air pressure for operation 6.0 bar g
" cleaned and degreased for oxygen service "
Ambient temperature limit: -40°C / -40°F (233K) up to +80°C / 176°F (353K)

Overview - required actuator sizes for differential pressures

DN	Differential pressure in bar												
	1.0 - 3.0	3.1 - 4.0	4.1 - 7.0	7.1 - 10.0	10.1 - 11.0	11.1 - 15.0	15.1 - 18.0	18.1 - 20.0	20.1 - 22.0	22.1 - 30.0	30.1 - 33.0	33.1 - 35.0	35.1 - 50.0
10	B	B	B	B	B	B	B	B	B	B	B	B	B
15	B	B	B	B	B	B	B	B	B	B	B	B	B
20	B	B	B	B	B	B	B	B	B	B	B	B	B
25	B	B	B	B	B	B	B	B	B	B	B	B	B
32	B	B	B	B	B	B	B	B	B	B	B	B	C
40	B	B	B	B	B	B	B	B	B	C	C	C	C
50	B	B	B	B	B	B	C	C	C	C	C	C	-
65	B	B	B	C	C	C	C	-	-	-	-	-	-
80	B	B	C	C	-	-	-	-	-	-	-	-	-
100	B	-	-	-	-	-	-	-	-	-	-	-	-
150	-	-	-	-	-	-	-	-	-	-	-	-	-

The differential pressures are based on the flow direction of the valve.
Differential pressures against the flow direction have to be requested separately.

Code in Table	Part No. Actuator
B	27521.35B6.6GPO
C	27521.60A6.6GPO

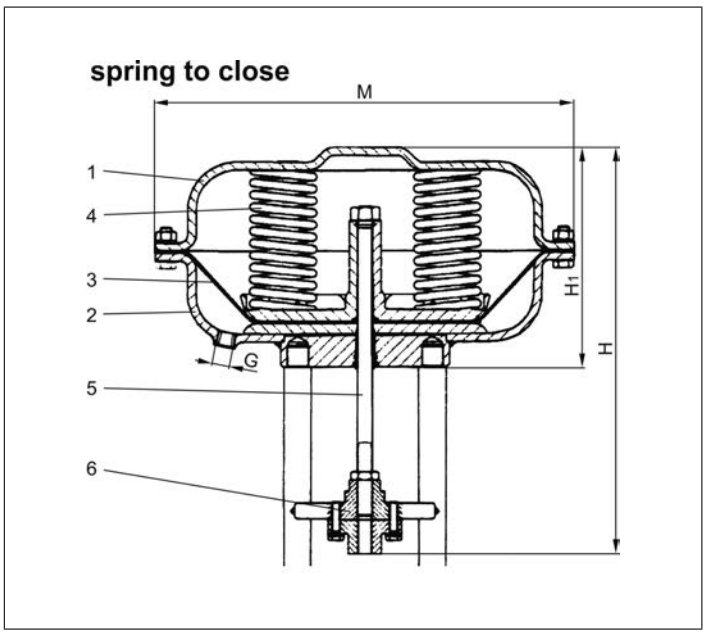

Materials		DIN EN	ASTM
1	Body	1.4571	A 240 Grade 316Ti
2	Body	1.4571	A 240 Grade 316Ti
3	Diaphragm	EPDM	
4	Springs	1.7102	AISI 9254
5	Actuator stem	1.4404	A 276 Grade 316L
6	Coupling	1.4571	A 240 Grade 316Ti

Type 27521	Technical data		
Part No. Actuator		**27521**	
		.35B6.6GPO	**.60A6.6GPO**
Diameter Actuator	M	210	310
Height	H	276	309
Height	H1	136	166
Thread	G	1/4" NPT	1/4" NPT
Diaphragm area	cm^2	280	530
Spring rage	bar	0.8 - 3.0	0.8 - 2.8
Minimum air pressure	bar	3.2	3.0
Regulating lift	mm	35	40
Weight	ca. kg	5.0	12.5

Dimensions in mm.

Offshore Valves

Type 27521 - Pneumatic Actuator - Control Valve

Pneumatic Actuators for Control Valves
Actuator - air to open, **spring to close**
maximum air pressure for operation 6.0 bar g
" cleaned and degreased for oxygen service "
Ambient temperature limit: -40°C / -40°F (233K) up to +80°C / 176°F (353K)

Overview - required actuator sizes for differential pressures

DN	Differential pressure in bar															
	1.0 - 2.0	2.1 - 4.0	4.1 - 6.0	6.1 - 8.0	8.1 - 10.0	10.1 - 12.0	12.1 - 15.0	15.1 - 17.0	17.1 - 19.0	19.1 - 22.0	22.1 - 25.0	25.1 - 29.0	29.1 - 35.0	35.1 - 39.0	39.1 - 42.0	42.1 - 50.0
10	B	B	B	B	B	B	B	B	B	B	B	B	B	B	B	B
15	B	B	B	B	B	B	B	B	B	B	B	B	B	B	B	B
20	B	B	B	B	B	B	B	B	B	B	B	B	B	B	B	B
25	B	B	B	B	B	B	B	B	B	B	B	B	B	B	B	B
32	B	B	B	B	B	B	B	B	B	B	C	C	C	C	C	C
40	B	B	B	B	B	B	B	C	C	C	C	C	C	C	C	-
50	B	B	B	B	B	C	C	C	C	C	C	C	C	-	-	-
65	C	C	C	C	C	C	-	-	-	-	-	-	-	-	-	-
80	C	C	C	-	-	-	-	-	-	-	-	-	-	-	-	-
100	C	C	-	-	-	-	-	-	-	-	-	-	-	-	-	-
150	-	-	-	-	-	-	-	-	-	-	-	-	-	-	-	-

The differential pressures are based on the flow direction of the valve.
Differential pressures against the flow direction have to be requested separately.

Code in Table	Part No. Actuator
B	27521.35B6.6GPO
C	27521.60A6.6GPO

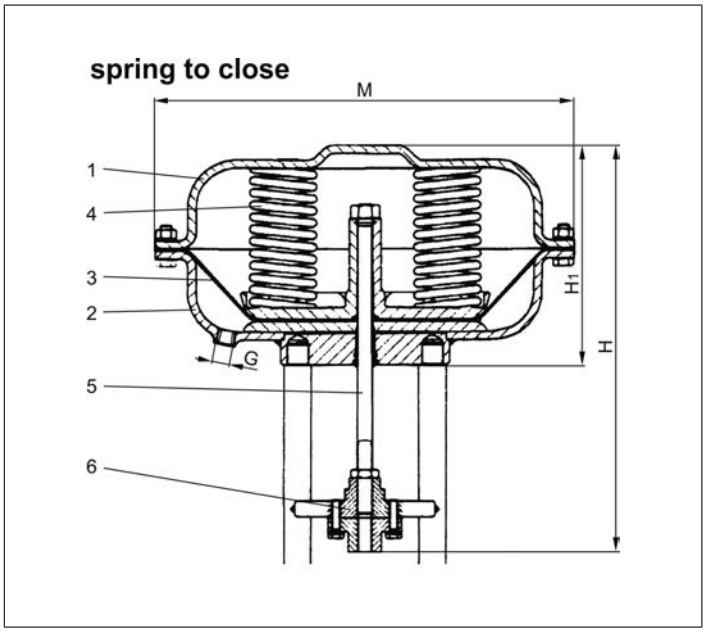

Materials		DIN EN	ASTM
1	Body	1.4571	A 240 Grade 316Ti
2	Body	1.4571	A 240 Grade 316Ti
3	Diaphragm	EPDM	
4	Springs	1.7102	AISI 9254
5	Actuator stem	1.4404	A 276 Grade 316L
6	Coupling	1.4571	A 240 Grade 316Ti

Type 27521	Technical data		
Part No. Actuator		**27521**	
		.35B6.6GPO	**.60A6.6GPO**
Diameter Actuator	M	210	310
Height	H	276	309
Height	H1	136	166
Thread	G	1/4" NPT	1/4" NPT
Diaphragm area	cm^2	280	530
Spring rage	bar	0.8 - 3.0	0.8 - 2.8
Minimum air pressure	bar	3.2	3.0
Regulating lift	mm	35	40
Weight	ca. kg	5.0	12.5

Dimensions in mm.

Edition 2022-11

Offshore Valves

Type 27522 - Pneumatic Actuator - Globe Valve (on/off)

Pneumatic Actuators for Globe Valves (on/off)
Actuator - **spring to open**, air to close
maximum air pressure for operation 6.0 bar g
" cleaned and degreased for oxygen service "
Ambient temperature limit: -40°C / -40°F (233K) up to +80°C / 176°F (353K)

Overview - required actuator sizes for differential pressures

DN	Differential pressure in bar											
	1.0 - 5.0	5.1 - 7.0	7.1 - 14.0	14.1 - 17.0	17.1 - 19.0	19.1 - 22.0	22.1 - 26.0	26.1 - 29.0	29.1 - 35.0	35.1 - 37.0	37.1 - 45.0	45.1 - 50.0
10	B	B	B	B	B	B	B	B	B	B	B	B
15	B	B	B	B	B	B	B	B	B	B	B	B
20	B	B	B	B	B	B	B	B	B	B	B	B
25	B	B	B	B	B	B	B	B	B	B	B	B
32	B	B	B	B	B	B	B	B	B	B	C	C
40	B	B	B	B	B	B	B	B	C	C	C	C
50	B	B	B	B	B	C	C	C	C	C	C	C
65	B	B	B	C	C	C	C	C	C	C	-	-
80	B	B	C	C	C	C	-	-	-	-	-	-
100	B	C	C	-	-	-	-	-	-	-	-	-
150	-	-	-	-	-	-	-	-	-	-	-	-

The differential pressures are based on the flow direction of the valve.
Differential pressures against the flow direction have to be requested separately.

Code in Table	Part No. Actuator
B	27522.35B6.6GPS
C	27522.60A6.6GPS

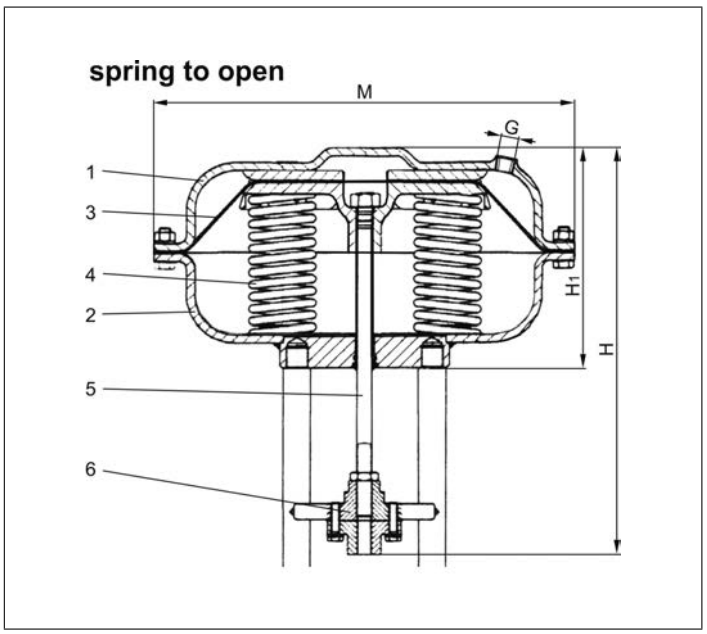

Materials		DIN EN	ASTM
1	Body	1.4571	A 240 Grade 316Ti
2	Body	1.4571	A 240 Grade 316Ti
3	Diaphragm	EPDM	
4	Springs	1.7102	AISI 9254
5	Actuator stem	1.4404	A 276 Grade 316L
6	Coupling	1.4571	A 240 Grade 316Ti

Type 27522	Technical data		
Part No. Actuator		**27522**	
		.35B6.6GPS	**.60A6.6GPS**
Diameter Actuator	M	210	310
Height	H	276	309
Height	H1	136	166
Thread	G	1/4" NPT	1/4" NPT
Diaphragm area	cm^2	280	530
Spring rage	bar	0.8 - 3.0	0.8 - 2.8
Minimum air pressure	bar	6.0	6.0
Regulating lift	mm	35	40
Weight	ca. kg	5.0	12.5

Dimensions in mm.

Offshore Valves

Type 27522 - Pneumatic Actuator - Control Valve

Pneumatic Actuators for Control Valves
Actuator - **spring to open**, air to close
maximum air pressure for operation 6.0 bar g
" cleaned and degreased for oxygen service "
Ambient temperature limit: -40°C / -40°F (233K) up to +80°C / 176°F (353K)

Overview - required actuator sizes for differential pressures

DN	Differential pressure in bar								
	1.0 - 5.0	5.1 - 13.0	13.1 - 15.0	15.1 - 21.0	21.1 - 23.0	23.1 - 29.0	29.1 - 34.0	34.1 - 37.0	37.1 - 50.0
10	B	B	B	B	B	B	B	B	B
15	B	B	B	B	B	B	B	B	B
20	B	B	B	B	B	B	B	B	B
25	B	B	B	B	B	B	B	B	B
32	B	B	B	B	B	B	B	B	C
40	B	B	B	B	B	B	B	C	C
50	C	C	C	C	C	C	C	C	C
65	C	C	C	C	C	C	-	-	-
80	C	C	C	C	-	-	-	-	-
100	C	C	-	-	-	-	-	-	-
150	-	-	-	-	-	-	-	-	-

The differential pressures are based on the flow direction of the valve.
Differential pressures against the flow direction have to be requested separately.

Code in Table	Part No. Actuator
B	27522.35B6.6GPS
C	27522.60A6.6GPS

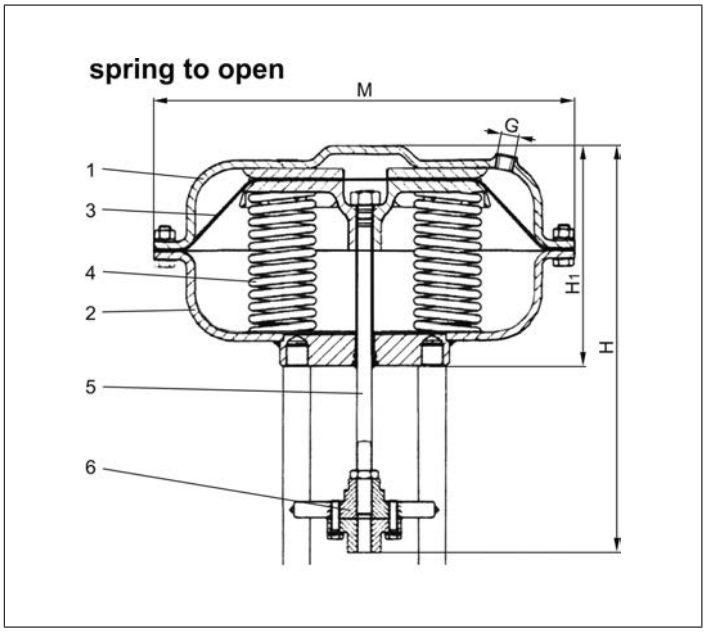

Materials		DIN EN	ASTM
1	Body	1.4571	A 240 Grade 316Ti
2	Body	1.4571	A 240 Grade 316Ti
3	Diaphragm	EPDM	
4	Springs	1.7102	AISI 9254
5	Actuator stem	1.4404	A 276 Grade 316L
6	Coupling	1.4571	A 240 Grade 316Ti

Type 27522	Technical data		
Part No. Actuator		**27522**	
		.35B6.6GPS	**.60A6.6GPS**
Diameter Actuator	M	210	310
Height	H	276	309
Height	H1	136	166
Thread	G	1/4" NPT	1/4" NPT
Diaphragm area	cm^2	280	530
Spring rage	bar	0.8 - 3.0	0.8 - 2.8
Minimum air pressure	bar	6.0	6.0
Regulating lift	mm	35	40
Weight	ca. kg	5.0	12.5

Dimensions in mm.

Edition 2022-11

Offshore Valves
Type 05714 - Check Valve

Cryogenic-Check Valves, PN50 (DN65=PN45, DN150=PN40)

Stainless steel body and cap
with spring, opening pressure ca. 0.1 bar
“ cleaned and degreased for oxygen service "

Part No. 05714.X.004*
Butt or Socket weld connection for stainless steel pipes acc. to ISO 1127 or ASTM A312
Disc seal: PTFE / Carbon filled (25%)

Part No. 05714.X.005*
Butt or Socket weld connection for stainless steel pipes acc. to ISO 1127 or ASTM A312
Disc seal: PTFE

Available options - on request only:
· Welded stainless steel stubs acc. to ISO 1127 or ASTM A312 - length FF + 200mm

Applications:
Approved for air gases, vapours and cryogenic liquefied gases incl. LNG.
Working temperature: -255°C / -427°F (18K) up to +120°C / +248°F (393K)

Materials		DIN EN	ASTM
1	Body	1.4409	A 351 CF3M
2	Valve seal up to DN50	PTFE / Carbon filled (25%)	
2	Valve seal from DN65	PTFE	
3	Disc	1.4404	A 276 Grade 316L
4	Spring	1.4571	A 313 Grade 316Ti
5	Bonnet gasket	Graphite	
6	Bolts	1.4571/A4	similar A 194 B8T
7	Cap	1.4404	A 276 Grade 316L
7a	Bush from DN65	PTFE	

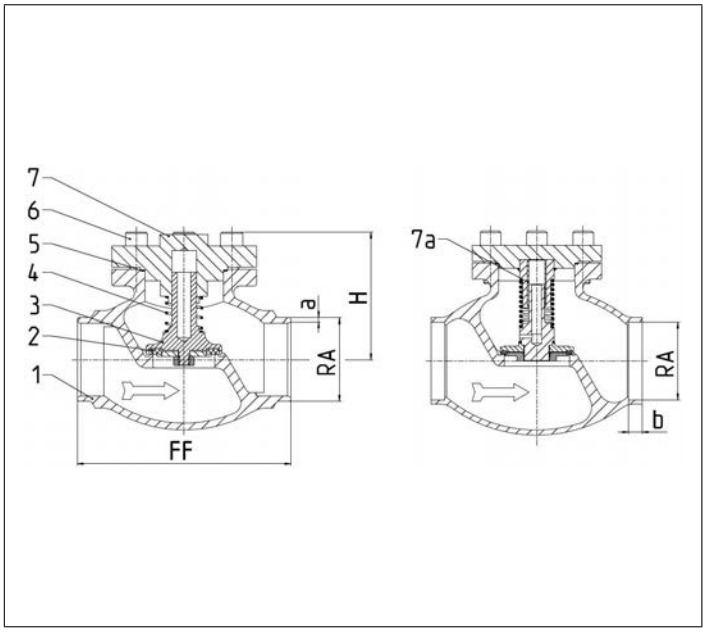

Type 05714 - Standard design	Technical data													
Nominal size	**DN**	**10**	**15**	**15**	**20**	**25**	**32**	**40**	**40**	**50**	**65**	**80**	**100**	**150**
Dimension code	.X.	1012	1517	1521	2026	2533	3238	4042	4048	5060	657x	8088	0114	0168
Face-to-face dimension	FF	70	85	85	100	115	115	130	130	155	205	245	280	400
Height	H	71	71	71	72	75	87	95	95	95	125	150	185	214
Outside pipe-Ø ISO 1127	RA	12.0	17.2	21.3	26.9	33.7	38.0	42.4	48.3	60.3	76.1	88.9	114.3	168.3
Wall thickness pipe ISO 1127	a	1.0	1.6	2.0	2.0	2.0	2.0	2.0	2.0	2.0	2.9	3.2	6.0	7.1
Outside pipe-Ø ASTM A312	RA	13.72	17.15	21.34	26.67	33.40	-	42.16	48.26	60.33	73.03	88.90	114.30	168.30
Wall thickness pipe ASTM A312	a	dimensions acc. to S10 or S40												
Socket depth	b	6	10	10	13	13	-	13	13	16	16	16	20	20
Weight	ca. kg	0.7	0.95	1.0	1.3	1.6	2.4	3.9	3.9	5.7	9.6	14.6	20.0	50.0
Kvs-Value	m^3/h	1.6	3.8	4.3	6.7	11.5	14.0	20.6	22.6	37.1	71.1	104.0	170.0	350.0
Cv-Value	gal/mi	1.9	4.4	5.0	7.8	13.4	16.2	23.9	26.3	43.2	82.9	121.3	198.3	408.4

Dimensions in mm. Leakage rates according to technical information: Leakrates HEROSE Check Valves

Offshore Valves

Type 05717 - Check Valve

Cryogenic-Check Valves, PN50

Stainless steel body and cap
with spring, opening pressure ca. 0.1 bar
“cleaned and degreased for oxygen service"

Part No. 05717.X.0001
Female thread connection (G) acc. to ISO 228/1

Part No. 05717.X.0006
Female thread connection NPT acc. to ANSI B 1.20.1

Available options - on request only:
· Female thread connection (R) acc. to ISO 7-Rc

Applications:
Approved for air gases, vapours and cryogenic liquefied gases incl. LNG.
Working temperature: -255°C / -427°F (18K) up to +120°C / +248°F (393K)

Materials		DIN EN	ASTM
1	Body	1.4409	A 351 CF3M
2	Valve seal up to DN50	PTFE / Carbon filled (25%)	
2	Valve seal from DN65	PTFE	
3	Disc	1.4404	A 276 Grade 316L
4	Spring	1.4571	A 313 Grade 316Ti
5	Bonnet gasket	Graphite	
6	Bolts	1.4571/A4	similar A 194 B8T
7	Cap	1.4404	A 276 Grade 316L

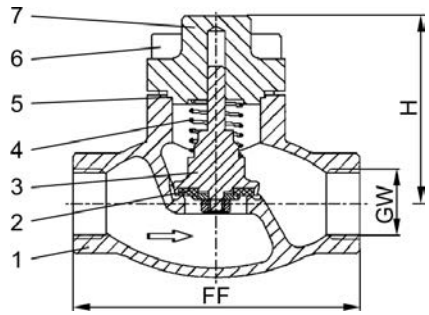

Type 05717 - Standard design	Technical data								
Nominal size	**DN**	**10**	**10**	**15**	**20**	**25**	**40**	**40**	**50**
Thread size	GW	1/4	3/8	1/2	3/4	1	1-1/4	1-1/2	2
Dimension code	.X.	0200	0300	0400	0600	1000	1200	1400	2000
Face-to-face dimension	FF	70	70	85	100	115	130	130	155
Height	H	71	71	71	72	75	95	95	95
Weight	ca. kg	0.7	0.7	1.0	1.3	1.6	3.9	3.9	5.7
Kvs-Value	m^3/h	1.6	2.2	4.3	6.7	11.5	20.6	22.6	37.1
Cv-Value	gal/min	1.9	2.6	5.0	7.8	13.4	23.9	26.3	43.2

Dimensions in mm. Leakage rates according to technical information: Leakrates HEROSE Check Valves

Edition 2022-11

Offshore Valves

Type 05719 - Check Valve, DIN EN Flanges

Cryogenic-Check Valves, PN40

Stainless steel body and cap
with spring, opening pressure ca. 0.1 bar
" cleaned and degreased for oxygen service "

Part No. 05719.X.0042
Flanged connection acc. to DIN EN 1092-1 PN40
Disc seal: PTFE / Carbon filled (25%)

Part No. 05719.X.0052
Flanged connection acc. to DIN EN 1092-1 PN40
Disc seal: PTFE

Applications:
Approved for air gases, vapours and cryogenic liquefied gases incl. LNG.
Working temperature: -255°C / -427°F (18K) up to +120°C / +248°F (393K)

Materials		DIN EN	ASTM
1	Body	1.4409	A 351 CF3M
2	Valve seal up to DN50	PTFE / Carbon filled (25%)	
2a	Valve seal from DN65	PTFE	
3	Disc	1.4404	A 276 Grade 316L
4	Spring	1.4571	A 313 Grade 316Ti
5	Bonnet gasket	Graphite	
6	Bolts	1.4571/A4	similar A 194 B8T
7	Cap	1.4404	A 276 Grade 316L
7a	Bush from DN65	PTFE	

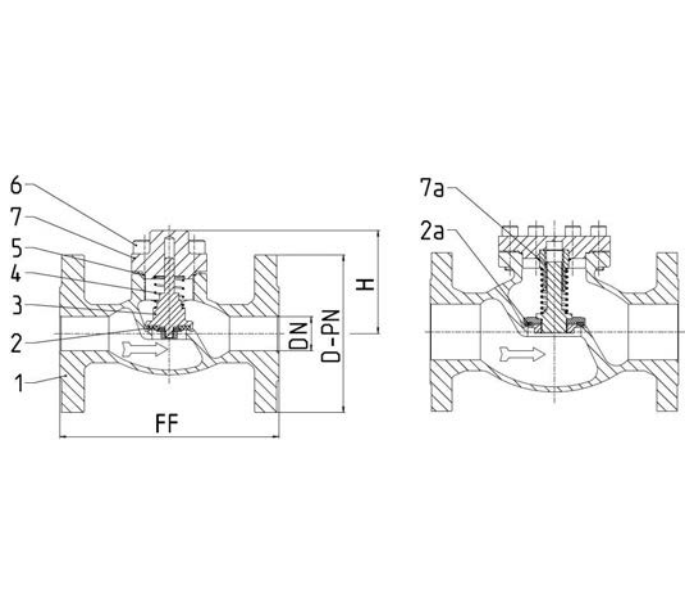

Type 05719 - Standard design	Technical data									
Nominal size	**DN**	**15**	**20**	**25**	**40**	**50**	**65**	**80**	**100**	**150**
Dimension code - Flange EN 1092-1 PN40	.X.	0150	0200	0250	0400	0500	0650	0800	1000	1500
Flange-Ø	D-PN	95	105	115	150	165	185	200	235	300
Face-to-face dimension	FF	140	150	160	200	230	290	310	350	550
Height	H	70	75	75	95	90	125	150	165	215
Weight	ca. kg	2.9	3.4	4.4	6.4	11.6	19.2	25.2	39.8	72.7
Kvs-Value	m^3/h	4.3	6.7	11.5	22.6	37.1	71.1	104.0	170.0	350.0
Cv-Value	gal/min	5.0	7.8	13.4	26.3	43.2	82.9	121.3	198.3	408.4

Dimensions in mm. Leakage rates according to technical information: Leakrates HEROSE Check Valves

Offshore Valves

Type 05719 - Check Valve, ANSI Flanges

Cryogenic-Check Valves, class 300

Stainless steel body and cap
with spring, opening pressure ca. 0.1 bar
" cleaned and degreased for oxygen service "

Part No. 05719.X.0043
Flanged connection acc. to ANSI B16.5 class 300
Disc seal: PTFE / Carbon filled (25%)

Part No. 05719.X.0053
Flanged connection acc. to ANSI B16.5 class 300
Disc seal: PTFE

Applications:
Approved for air gases, vapours and cryogenic liquefied gases incl. LNG.
Working temperature: -255°C / -427°F (18K) up to +120°C / +248°F (393K)

Materials		DIN EN	ASTM
1	Body	1.4409	A 351 CF3M
2	Valve seal up to DN50	PTFE / Carbon filled (25%)	
2a	Valve seal from DN65	PTFE	
3	Disc	1.4404	A 276 Grade 316L
4	Spring	1.4571	A 313 Grade 316Ti
5	Bonnet gasket	Graphite	
6	Bolts	1.4571/A4	similar A 194 B8T
7	Cap	1.4404	A 276 Grade 316L
7a	Bush from DN65	PTFE	

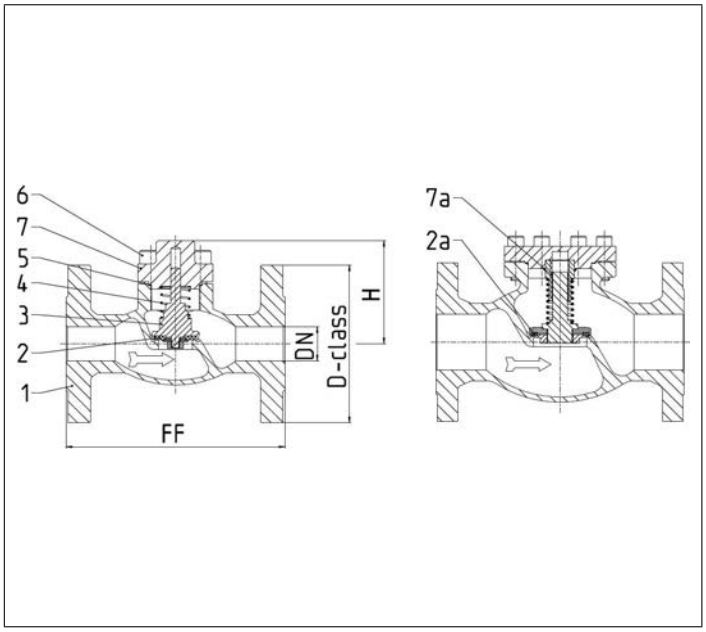

Type 05719 - Standard design	Technical data									
Nominal size	**DN**	**15**	**20**	**25**	**40**	**50**	**65**	**80**	**100**	**150**
Dimension code - Flange ANSI B16.5 class 300	.X.	0400	0600	1000	1400	2000	2400	3000	4000	6000
Flange-Ø	D-class	95	115	125	155	165	190	210	255	320
Face-to-face dimension	FF	140	150	160	200	230	290	310	350	597
Height	H	70	75	75	95	90	125	150	165	215
Weight	ca. kg	2.9	3.4	4.4	6.4	11.6	19.2	25.2	39.8	90.3
Kvs-Value	m^3/h	4.3	6.7	11.5	22.6	37.1	71.1	104.0	170.0	350.0
Cv-Value	gal/min	5.0	7.8	13.4	26.3	43.2	82.9	121.3	198.3	408.4

Dimensions in mm. Leakage rates according to technical information: Leakrates HEROSE Check Valves

Edition 2022-11

Offshore Valves

Type 05719 - Check Valve, ANSI Flanges

Cryogenic-Check Valves, class 150

Stainless steel body and cap
with spring, opening pressure ca. 0.1 bar
" cleaned and degreased for oxygen service "

Part No. 05719.X.0041
Flanged connection acc. to ANSI B16.5 class 150
Disc seal: PTFE / Carbon filled (25%)

Part No. 05719.X.0051
Flanged connection acc. to ANSI B16.5 class 150
Disc seal: PTFE

Applications:
Approved for air gases, vapours and cryogenic liquefied gases incl. LNG.
Working temperature: -255°C / -427°F (18K) up to +120°C / +248°F (393K)

Materials		DIN EN	ASTM
1	Body	1.4409	A 351 CF3M
2	Valve seal up to DN50	PTFE / Carbon filled (25%)	
2a	Valve seal from DN65	PTFE	
3	Disc	1.4404	A 276 Grade 316L
4	Spring	1.4571	A 313 Grade 316Ti
5	Bonnet gasket	Graphite	
6	Bolts	1.4571/A4	similar A 194 B8T
7	Cap	1.4404	A 276 Grade 316L
7a	Bush from DN65	PTFE	

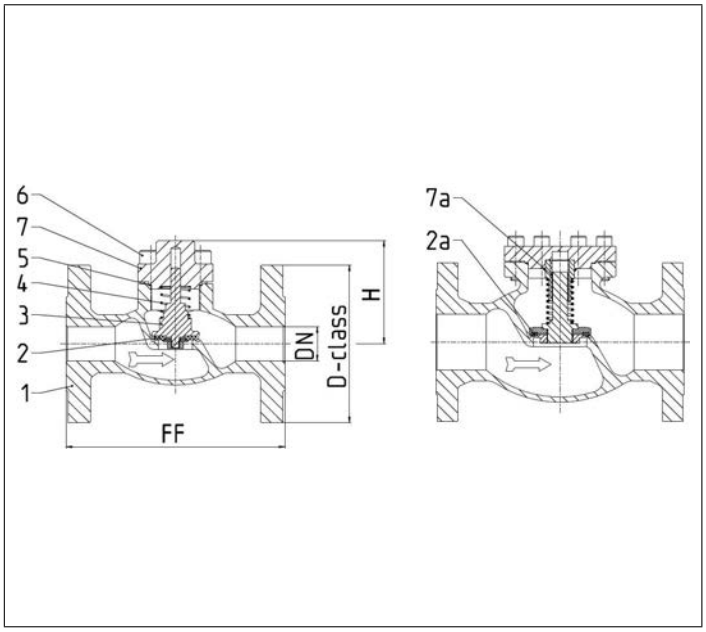

Type 05719 - Standard design	Technical data									
Nominal size	**DN**	**15**	**20**	**25**	**40**	**50**	**65**	**80**	**100**	**150**
Dimension code - Flange ANSI B16.5 class 150	.X.	0400	0600	1000	1400	2000	2400	3000	4000	6000
Flange-Ø	D-class	90	100	110	125	150	180	190	230	280
Face-to-face dimension	FF	140	150	160	200	230	290	310	350	577
Height	H	70	75	75	95	90	125	150	165	215
Weight	ca. kg	2.9	3.4	4.4	6.4	11.6	19.2	25.2	39.8	81.5
Kvs-Value	m^3/h	4.3	6.7	11.5	22.6	37.1	71.1	104.0	170.0	350.0
Cv-Value	gal/min	5.0	7.8	13.4	26.3	43.2	82.9	121.3	198.3	408.4

Dimensions in mm. Leakage rates according to technical information: Leakrates HEROSE Check Valves

Offshore Valves

Type 08717 - Strainer

Cryogenic-Strainer, PN50 (DN65=PN45, DN150=PN40)

Stainless steel body and cap
with strainer screen mesh size 0.25 mm
“ cleaned and degreased for oxygen service "

Part No. 08717.X.000*
* Butt weld connection for stainless steel pipes acc. to ISO 1127 or ASTM A312

Part No. 08717.X.0004
Socket weld connection for stainless steel pipes acc. to ISO 1127 or ASTM A312

Available options - on request only:
· Welded stainless steel stubs acc. to ISO 1127 or ASTM A312 - length FF + 200mm
· other mesh sizes for strainer screen (changed flow coefficient)
· strainer screen in bronze or monel
· sintered filter in bronze or stainless steel in various porosities

Applications:
Approved for air gases, vapours and cryogenic liquefied gases incl. LNG.
Working temperature: -255°C / -427°F (18K) up to +120°C / +248°F (393K)

Materials		DIN EN	ASTM
1	Body	1.4409	A 351 CF3M
2	Strainer screen	1.4404	A 276 Grade 316L
3	Bonnet gasket	Graphite	
4	Bolts	1.4571/A4	similar A 194 B8T
5	Cap	1.4404	A 276 Grade 316L

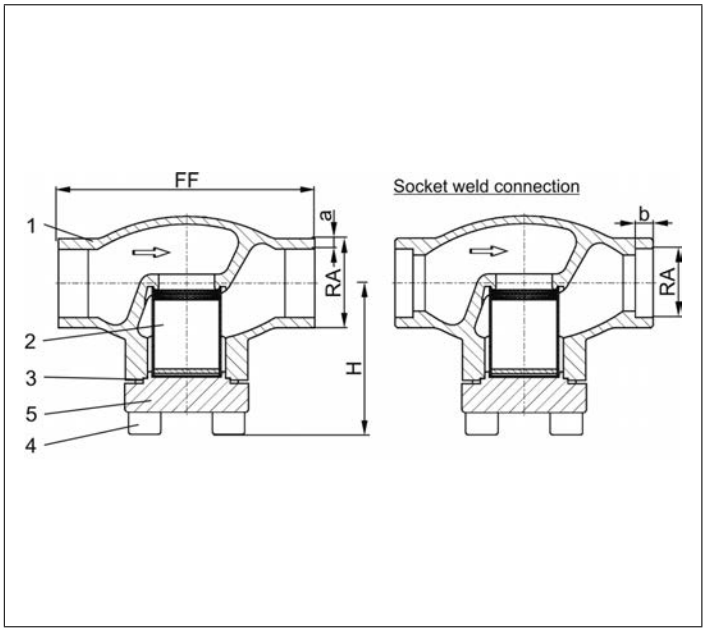

Type 08717 - Standard design	Technical data													
Nominal size	**DN**	**10**	**15**	**15**	**20**	**25**	**32**	**40**	**40**	**50**	**65**	**80**	**100**	**150**
Dimension code	.X.	1012	1517	1521	2026	2533	3238	4042	4048	5060	657x	8088	0114	0168
Face-to-face dimension	FF	70	85	85	100	115	115	130	130	155	205	245	280	400
Height	H	62	62	62	65	69	76	89	89	89	125	150	166	215
Outside pipe-Ø ISO 1127	RA	12.0	17.2	21.3	26.9	33.7	38.0	42.4	48.3	60.3	76.1	88.9	114.3	168.3
Wall thickness pipe ISO 1127	a	1.0	1.6	2.0	2.0	2.0	2.0	2.0	2.0	2.0	2.9	3.2	6.0	7.1
Outside pipe-Ø ASTM A312	RA	13.72	17.15	21.34	26.67	33.40	-	42.16	48.26	60.33	73.03	88.90	114.3	168.3
Wall thickness pipe ASTM A312	a	dimensions acc. to S10 or S40												
Socket depth	b	6	10	10	13	13	-	13	13	16	16	16	20	20
Weight	ca. kg	0.6	0.75	0.8	0.9	1.2	1.8	3.1	3.1	4.7	8.9	13.6	18.0	48.0
Kvs-Value	m^3/h	1.5	3.4	3.4	6.5	9.5	14.0	19.0	21.0	28.0	62.0	90.0	118.0	300.0
Cv-Value	gal/mi	1.7	3.9	3.9	7.5	11.0	16.2	22.0	24.3	32.4	72.3	105.0	137.7	350.1

Dimensions in mm.

Edition 2022-11

Offshore Valves
Type 08716 - Strainer

Cryogenic-Strainer, PN50

Stainless steel body and cap
with strainer screen mesh size 0.25 mm
“ cleaned and degreased for oxygen service "

Part No. 08716.X.0001
Female thread connection (G) acc. to ISO 228/1

Part No. 08716.X.0006
Female thread connection NPT acc. to ANSI B 1.20.1

Available options - on request only:
· Female thread connection (R) acc. to ISO 7-Rc
· other mesh sizes for strainer screen (changed flow coefficient)
· strainer screen in bronze or monel
· sintered filter in bronze or stainless steel in various porosities

Applications:
Approved for air gases, vapours and cryogenic liquefied gases incl. LNG.
Working temperature: -255°C / -427°F (18K) up to +120°C / +248°F (393K)

Materials		DIN EN	ASTM
1	Body	1.4409	A 351 CF3M
2	Strainer screen	1.4404	A 276 Grade 316L
3	Bonnet gasket	Graphite	
4	Bolts	1.4571/A4	similar A 194 B8T
5	Cap	1.4404	A 276 Grade 316L

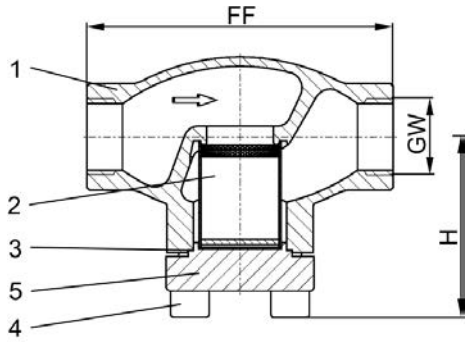

Type 08716 - Standard design	Technical data								
Nominal size	**DN**	**10**	**10**	**15**	**20**	**25**	**40**	**40**	**50**
Thread size	GW	1/4	3/8	1/2	3/4	1	1-1/4	1-1/2	2
Dimension code	.X.	0200	0300	0400	0600	1000	1200	1400	2000
Face-to-face dimension	FF	70	70	85	100	115	130	130	155
Height	H	62	62	62	65	69	89	89	89
Weight	ca. kg	0.6	0.6	0.8	0.9	1.2	3.1	3.1	4.7
Kvs-Value	m^3/h	1.5	1.5	3.4	6.5	9.5	19.0	21.0	28.0
Cv-Value	gal/min	1.7	1.7	3.9	7.5	11.0	22.0	24.3	32.4

Dimensions in mm.

Offshore Valves

Type 08732 - Strainer, DIN EN Flanges

Cryogenic-Strainer, PN40

Stainless steel body and cap
with strainer screen mesh size 0.25 mm
“cleaned and degreased for oxygen service"

Part No. 08732.X.0002
Flanged connection acc. to DIN EN 1092-1 PN40

Available options - on request only:
· other mesh sizes for strainer screen (changed flow coefficient)
· strainer screen in bronze or monel
· sintered filter in bronze or stainless steel in various porosities

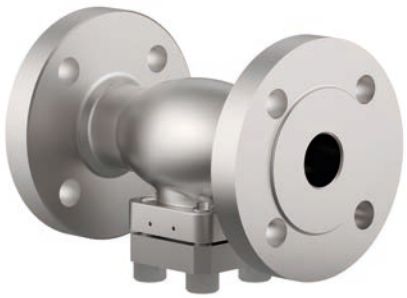

Applications:
Approved for air gases, vapours and cryogenic liquefied gases incl. LNG.
Working temperature: -255°C / -427°F (18K) up to +120°C / +248°F (393K)

Materials		DIN EN	ASTM
1	Body	1.4409	A 351 CF3M
2	Strainer screen	1.4404	A 276 Grade 316L
3	Bonnet gasket	Graphite	
4	Bolts	1.4571/A4	similar A 194 B8T
5	Cap	1.4404	A 276 Grade 316L

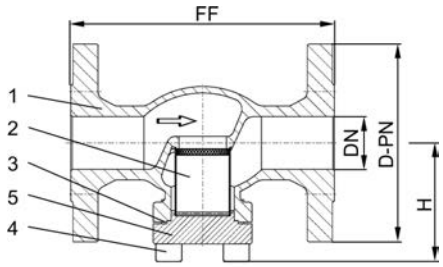

Type 08732 - Standard design	Technical data									
Nominal size	**DN**	**15**	**20**	**25**	**40**	**50**	**65**	**80**	**100**	**150**
Dimension code - Flange EN 1092-1 PN40	.X.	0150	0200	0250	0400	0500	0650	0800	1000	1500
Flange-Ø	D-PN	95	105	115	150	165	185	200	235	300
Face-to-face dimension	FF	140	150	160	200	230	290	310	350	550
Height	H	62	69	69	89	89	125	150	166	212
Weight	ca. kg	2.5	3.0	4.0	5.6	10.6	17.7	23.2	36.8	68.1
Kvs-Value	m^3/h	4.3	6.7	9.5	21.0	28.0	62.0	90.0	118.0	on request
Cv-Value	gal/min	5.0	7.8	11.0	24.3	32.4	72.3	105.0	137.7	on request

Dimensions in mm.

Edition 2022-11

Offshore Valves

Type 08732 - Strainer, ANSI Flanges

Cryogenic-Strainer, class 300

Stainless steel body and cap
with strainer screen mesh size 0.25 mm
“cleaned and degreased for oxygen service"

Part No. 08732.X.0003
Flanged connection acc. to ANSI B16.5 class 300

Available options - on request only:
· other mesh sizes for strainer screen (changed flow coefficient)
· strainer screen in bronze or monel
· sintered filter in bronze or stainless steel in various porosities

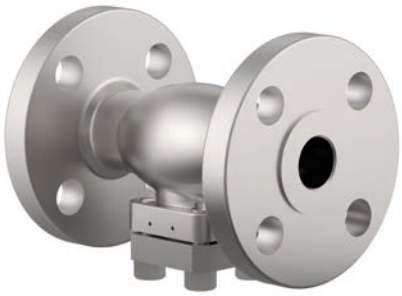

Applications:
Approved for air gases, vapours and cryogenic liquefied gases incl. LNG.
Working temperature: -255°C / -427°F (18K) up to +120°C / +248°F (393K)

Materials		DIN EN	ASTM
1	Body	1.4409	A 351 CF3M
2	Strainer screen	1.4404	A 276 Grade 316L
3	Bonnet gasket	Graphite	
4	Bolts	1.4571/A4	similar A 194 B8T
5	Cap	1.4404	A 276 Grade 316L

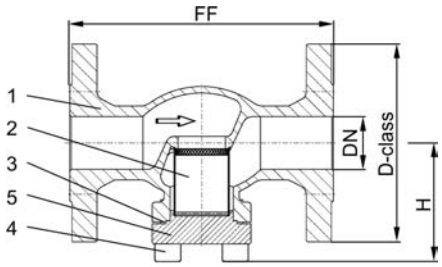

Type 08732 - Standard design	Technical data									
Nominal size	**DN**	**15**	**20**	**25**	**40**	**50**	**65**	**80**	**100**	**150**
Dimension code - Flange ANSI B16.5 class 300	.X.	0400	0600	1000	1400	2000	2400	3000	4000	6000
Flange-Ø	D-class	95	115	125	155	165	190	210	255	320
Face-to-face dimension	FF	140	150	160	200	230	290	310	350	597
Height	H	62	69	69	89	89	125	150	166	212
Weight	ca. kg	2.5	3.0	4.0	5.6	10.6	17.7	23.2	36.8	85.7
Kvs-Value	m^3/h	4.3	6.7	9.5	21.0	28.0	62.0	90.0	118.0	on request
Cv-Value	gal/min	5.0	7.8	11.0	24.3	32.4	72.3	105.0	137.7	on request

Dimensions in mm.

Offshore Valves

Type 08732 - Strainer, ANSI Flanges

Cryogenic-Strainer, class 150

Stainless steel body and cap
with strainer screen mesh size 0.25 mm
“cleaned and degreased for oxygen service"

Part No. 08732.X.0001
Flanged connection acc. to ANSI B16.5 class 150

Available options - on request only:
· other mesh sizes for strainer screen (changed flow coefficient)
· strainer screen in bronze or monel
· sintered filter in bronze or stainless steel in various porosities

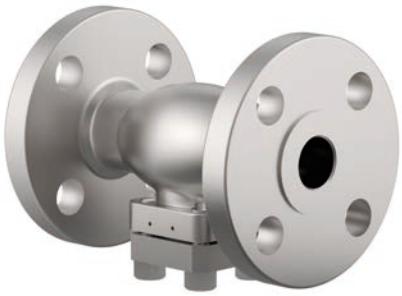

Applications:
Approved for air gases, vapours and cryogenic liquefied gases incl. LNG.
Working temperature: -255°C / -427°F (18K) up to +120°C / +248°F (393K)

Materials		DIN EN	ASTM
1	Body	1.4409	A 351 CF3M
2	Strainer screen	1.4404	A 276 Grade 316L
3	Bonnet gasket	Graphite	
4	Bolts	1.4571/A4	similar A 194 B8T
5	Cap	1.4404	A 276 Grade 316L

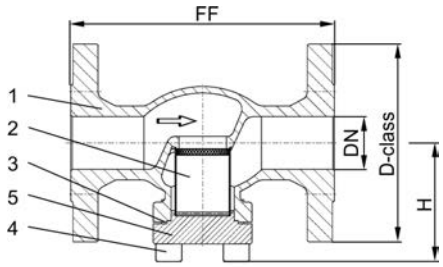

Type 08732 - Standard design	Technical data									
Nominal size	**DN**	**15**	**20**	**25**	**40**	**50**	**65**	**80**	**100**	**150**
Dimension code - Flange ANSI B16.5 class 150	.X.	0400	0600	1000	1400	2000	2400	3000	4000	6000
Flange-Ø	D-class	90	100	110	125	150	180	190	230	280
Face-to-face dimension	FF	140	150	160	200	230	290	310	350	577
Height	H	62	69	69	89	89	125	150	166	212
Weight	ca. kg	2.5	3.0	4.0	5.6	10.6	17.7	23.2	36.8	76.9
Kvs-Value	m^3/h	4.3	6.7	9.5	21.0	28.0	62.0	90.0	118.0	on request
Cv-Value	gal/min	5.0	7.8	11.0	24.3	32.4	72.3	105.0	137.7	on request

Dimensions in mm.

Edition 2022-11

Fire Safe and Offshore Valves

Type 01851 - Globe Valve

Cryogenic-Globe and Globe/Check Valves, PN50 (DN65=PN45)
“ Fire safe ” type test approval acc. to EN ISO 10497

Stainless steel body and topwork,
“ live loaded ” gland packing
“ cleaned and degreased for oxygen service "

Part No. 01851.X.000*
Part No. 01851.X.500* Globe/Check Valve
* Butt weld connection for stainless steel pipes acc. to ISO 1127 or ASTM A312

Part No. 01851.X.0004
Part No. 01851.X.5004 Globe/Check Valve
Socket weld connection for stainless steel pipes acc. to ISO 1127 or ASTM A312

Available options - on request only:
· Welded stainless steel stubs acc. to ISO 1127 or ASTM A312 - length FF + 200mm
· Valve with control disc (tapered design)

Applications:
Approved for air gases, vapours and cryogenic liquefied gases incl. LNG.
Working temperature: -255°C / -427°F (18K) up to +120°C / +248°F (393K)
Recommended working temperature: -60°C / -76°F (213K) up to +120°C / +248°F (393K)

Materials		DIN EN	ASTM
1	Body	1.4409	A 351 CF3M
2	Valve seal	PTFE / Carbon filled (25%)	
3	Disc	1.4404	A 276 Grade 316L
4	Bonnet gasket	Graphite	
5	Headpiece	1.4404	A 276 Grade 316L
6	Bolts	1.4571/A4	similar A 194 B8T
8	Stem	1.4404	A 276 Grade 316L
9	Gland packing	Graphite / PTFE / MICA	
10	Gland nut	1.4404	A 276 Grade 316L
11	Handwheel	1.4409	A 351 CF3M
12	Spring	1.4571	A 313 Grade 316Ti
13	Bush	CW452K	B 159 UNS C51900

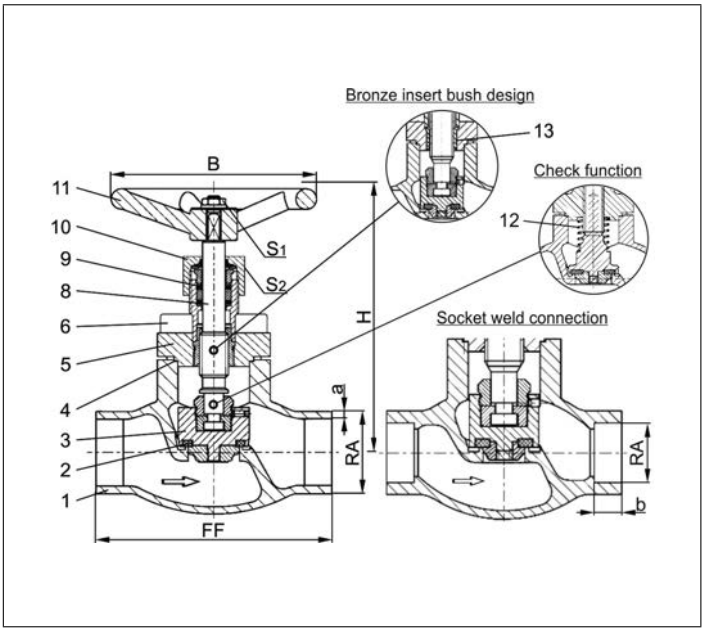

Type 01851 - Standard design	Technical data												
Nominal size	**DN**	**10**	**15**	**15**	**20**	**25**	**32**	**40**	**40**	**50**	**65**	**80**	**100**
Dimension code	.X.	1012	1517	1521	2026	2533	3238	4042	4048	5060	657x	8088	0114
Face-to-face dimension	FF	70	85	85	100	115	115	130	130	155	205	245	280
Height	H	140	140	140	140	140	170	175	175	200	260	310	350
Outside pipe-Ø ISO 1127	RA	12.0	17.2	21.3	26.9	33.7	38.0	42.4	48.3	60.3	76.1	88.9	114.3
Wall thickness pipe ISO 1127	a	1.0	1.6	2.0	2.0	2.0	2.0	2.0	2.0	2.0	2.9	3.2	6.0
Outside pipe-Ø ASTM A312	RA	13.72	17.15	21.34	26.67	33.40	-	42.16	48.26	60.33	73.03	88.90	114.3
Wall thickness pipe ASTM A312	a	dimensions acc. to S10 or S40											
Socket depth	b	6	10	10	13	13	-	13	13	16	16	16	20
Handwheel-Ø	B	100	100	100	100	100	125	125	125	125	200	250	315
Wrench size across flats	S_1	7	7	7	7	7	10	10	10	10	10	10	12
Wrench size across flats	S_2	30	30	30	30	30	36	36	36	36	36	36	41
Weight	ca. kg	1.0	1.25	1.3	1.7	2.0	2.8	4.2	4.2	6.7	10.7	16.0	23.0
Kvs-Value	m^3/h	1.6	3.8	4.3	6.7	11.5	14.0	20.6	22.6	37.1	71.1	104.0	170.0
Cv-Value	gal/min	1.9	4.4	5.0	7.8	13.4	16.2	23.9	26.3	43.2	82.9	121.3	198.3

Dimensions in mm.

Fire Safe and Offshore Valves
Type 01855 - Globe Valve

Cryogenic-Globe and Globe/Check Valves, PN50
“ Fire safe ” type test approval acc. to EN ISO 10497

Stainless steel body and topwork,
“ live loaded ” gland packing
“ cleaned and degreased for oxygen service "

Part No. 01855.X.0001
Part No. 01855.X.5001 Globe/Check Valve
Female thread connection (G) acc. to ISO 228/1

Part No. 01855.X.0006
Part No. 01855.X.5006 Globe/Check Valve
Female thread connection NPT acc. to ANSI B 1.20.1

Available options - on request only:
· Female thread connection (R) acc. to ISO 7-Rc
· Valve with control disc (tapered design)

Applications:
Approved for air gases, vapours and cryogenic liquefied gases incl. LNG.
Working temperature: -255°C / -427°F (18K) up to +120°C / +248°F (393K)
Recommended working temperature: -60°C / -76°F (213K) up to +120°C / +248°F (393K)

Materials		DIN EN	ASTM
1	Body	1.4409	A 351 CF3M
2	Valve seal	PTFE / Carbon filled (25%)	
3	Disc	1.4404	A 276 Grade 316L
4	Bonnet gasket	Graphite	
5	Headpiece	1.4404	A 276 Grade 316L
6	Bolts	1.4571/A4	similar A 194 B8T
8	Stem	1.4404	A 276 Grade 316L
9	Gland packing	Graphite / PTFE / MICA	
10	Gland nut	1.4404	A 276 Grade 316L
11	Handwheel	1.4409	A 351 CF3M
12	Spring	1.4571	A 313 Grade 316Ti
13	Bush	CW452K	B 159 UNS C51900

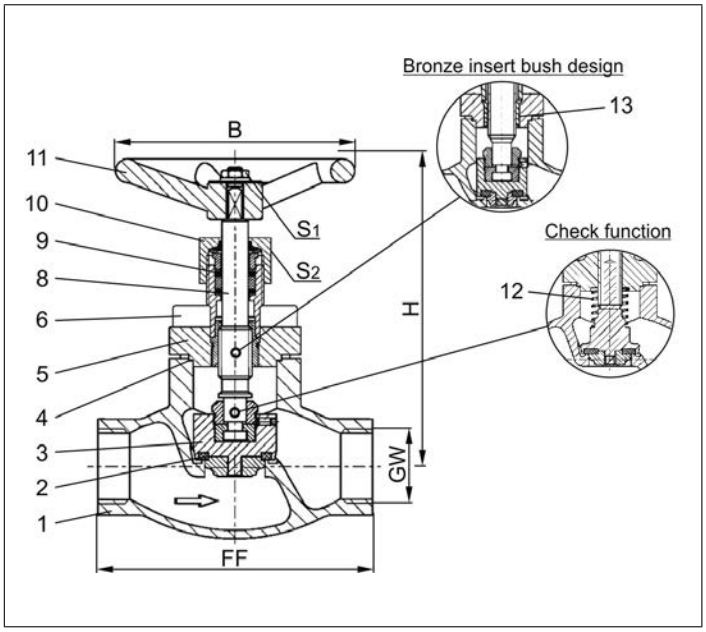

Type 01855 - Standard design	Technical data								
Nominal size	**DN**	**10**	**10**	**15**	**20**	**25**	**40**	**40**	**50**
Thread size	GW	1/4	3/8	1/2	3/4	1	1-1/4	1-1/2	2
Dimension code	.X.	0200	0300	0400	0600	1000	1200	1400	2000
Face-to-face dimension	FF	70	70	85	100	115	130	130	155
Height	H	140	140	140	140	140	175	175	200
Handwheel-Ø	B	100	100	100	100	100	125	125	125
Wrench size across flats	S_1	7	7	7	7	7	10	10	10
Wrench size across flats	S_2	30	30	30	30	30	36	36	36
Weight	ca. kg	1.0	1.0	1.3	1.7	2.0	4.2	4.2	6.7
Kvs-Value	m^3/h	1.6	2.2	4.3	6.7	11.5	20.6	22.6	37.1
Cv-Value	gal/min	1.9	2.6	5.0	7.8	13.4	23.9	26.3	43.2

Dimensions in mm.

Edition 2022-11

Fire Safe and Offshore Valves
Type 03851 - Globe Valve

Cryogenic-Globe and Globe/Check Valves, PN40
“ Fire safe ” type test approval acc. to EN ISO 10497

Stainless steel body and topwork,
“ live loaded ” gland packing
“ cleaned and degreased for oxygen service "

Part No. 03851.X.0002
Part No. 03851.X.5002 Globe/Check Valve
Flanged connection acc. to DIN EN 1092-1 PN40

Available options - on request only:
· Valve with control disc (tapered design)

Applications:
Approved for air gases, vapours and cryogenic liquefied gases incl. LNG.
Working temperature: -255°C / -427°F (18K) up to +120°C / +248°F (393K)
Recommended working temperature: -60°C / -76°F (213K) up to +120°C / +248°F (393K)

Materials		DIN EN	ASTM
1	Body	1.4409	A 351 CF3M
2	Valve seal	PTFE / Carbon filled (25%)	
3	Disc	1.4404	A 276 Grade 316L
4	Bonnet gasket	Graphite	
5	Headpiece	1.4404	A 276 Grade 316L
6	Bolts	1.4571/A4	similar A 194 B8T
8	Stem	1.4404	A 276 Grade 316L
9	Gland packing	Graphite / PTFE / MICA	
10	Gland nut	1.4404	A 276 Grade 316L
11	Handwheel	1.4409	A 351 CF3M
12	Spring	1.4571	A 313 Grade 316Ti
13	Bush	CW452K	B 159 UNS C51900

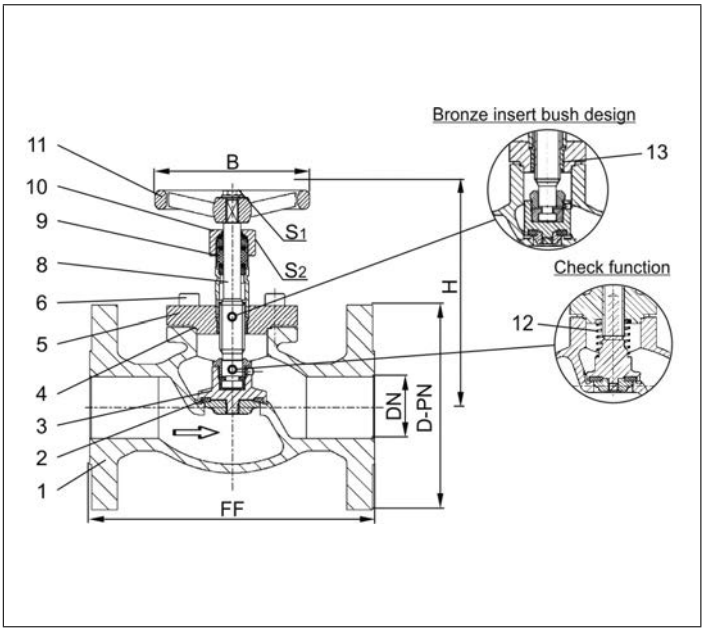

Type 03851 - Standard design	Technical data									
Nominal size	**DN**	**15**	**20**	**25**	**40**	**50**	**65**	**80**	**100**	**150**
Dimension code - Flange EN 1092-1 PN40	.X.	0150	0200	0250	0400	0500	0650	0800	1000	1500
Flange-Ø	D-PN	95	105	115	150	165	185	200	235	300
Face-to-face dimension	FF	140	150	160	200	230	290	310	350	550
Height	H	130	130	140	170	200	260	310	350	380
Handwheel-Ø	B	100	100	100	125	125	200	250	315	360
Wrench size across flats	S_1	7	7	7	10	10	10	10	12	15
Wrench size across flats	S_2	30	30	30	36	36	36	36	41	41
Weight	ca. kg	3.0	3.5	4.5	9.0	13.0	21.0	28.0	42.0	83.0
Kvs-Value	m^3/h	4.3	6.7	11.5	22.6	37.1	71.1	104.0	170.0	350.0
Cv-Value	gal/min	5.0	7.8	13.4	26.3	43.2	82.9	121.3	198.3	408.4

Dimensions in mm. Compliance of tightness requirements acc. to EN 1626 for DN150 up to 20 bar differential pressure. In the range of >20-40 bar, 350-700ml per second (1 bar, 20°C [68°F]) are reached.

Fire Safe and Offshore Valves
Type 03851 - Globe Valve

Cryogenic-Globe and Globe/Check Valves, class 300
“ Fire safe ” type test approval acc. to EN ISO 10497

Stainless steel body and topwork,
“ live loaded ” gland packing
“ cleaned and degreased for oxygen service "

Part No. 03851.X.0003
Part No. 03851.X.5003 Globe/Check Valve
Flanged connection acc. to ANSI B16.5 class 300

Available options - on request only:
· Valve with control disc (tapered design)

Applications:
Approved for air gases, vapours and cryogenic liquefied gases incl. LNG.
Working temperature: -255°C / -427°F (18K) up to +120°C / +248°F (393K)
Recommended working temperature: -60°C / -76°F (213K) up to +120°C / +248°F (393K)

Materials		DIN EN	ASTM
1	Body	1.4409	A 351 CF3M
2	Valve seal	PTFE / Carbon filled (25%)	
3	Disc	1.4404	A 276 Grade 316L
4	Bonnet gasket	Graphite	
5	Headpiece	1.4404	A 276 Grade 316L
6	Bolts	1.4571/A4	similar A 194 B8T
8	Stem	1.4404	A 276 Grade 316L
9	Gland packing	Graphite / PTFE / MICA	
10	Gland nut	1.4404	A 276 Grade 316L
11	Handwheel	1.4409	A 351 CF3M
12	Spring	1.4571	A 313 Grade 316Ti
13	Bush	CW452K	B 159 UNS C51900

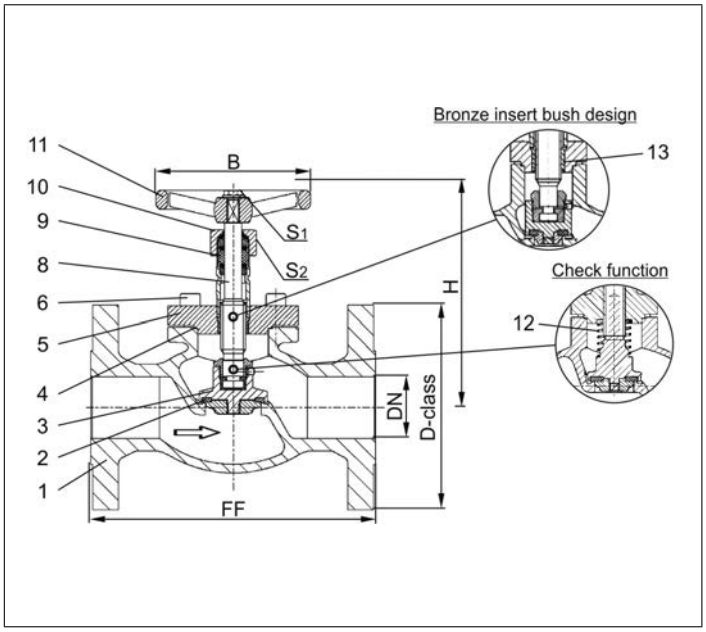

Type 03851 - Standard design	Technical data									
Nominal size	**DN**	**15**	**20**	**25**	**40**	**50**	**65**	**80**	**100**	**150**
Dimension code - Flange ANSI B16.5 class 300	.X.	0400	0600	1000	1400	2000	2400	3000	4000	6000
Flange-Ø	D-class	95	115	125	155	165	190	210	255	320
Face-to-face dimension	FF	140	150	160	200	230	290	310	350	597
Height	H	130	130	140	170	200	260	310	350	380
Handwheel-Ø	B	100	100	100	125	125	200	250	315	360
Wrench size across flats	S_1	7	7	7	10	10	10	10	12	15
Wrench size across flats	S_2	30	30	30	36	36	36	36	41	41
Weight	ca. kg	3.0	3.5	4.5	9.0	13.0	21.0	28.0	42.0	83.0
Kvs-Value	m^3/h	4.3	6.7	11.5	22.6	37.1	71.1	104.0	170.0	350.0
Cv-Value	gal/min	5.0	7.8	13.4	26.3	43.2	82.9	121.3	198.3	408.4

Dimensions in mm. Compliance of tightness requirements acc. to EN 1626 for DN150 up to 20 bar differential pressure. In the range of >20-40 bar, 350-700ml per second (1 bar, 20°C [68°F]) are reached.

Edition 2022-11

Fire Safe and Offshore Valves
Type 03851 - Globe Valve

Cryogenic-Globe and Globe/Check Valves, class 150
“ Fire safe ” type test approval acc. to EN ISO 10497

Stainless steel body and topwork,
“ live loaded ” gland packing
“ cleaned and degreased for oxygen service "

Part No. 03851.X.0001
Part No. 03851.X.5001 Globe/Check Valve
Flanged connection acc. to ANSI B16.5 class 150

Available options - on request only:
· Valve with control disc (tapered design)

Applications:
Approved for air gases, vapours and cryogenic liquefied gases incl. LNG.
Working temperature: -255°C / -427°F (18K) up to +120°C / +248°F (393K)
Recommended working temperature: -60°C / -76°F (213K) up to +120°C / +248°F (393K)

Materials		DIN EN	ASTM
1	Body	1.4409	A 351 CF3M
2	Valve seal	PTFE / Carbon filled (25%)	
3	Disc	1.4404	A 276 Grade 316L
4	Bonnet gasket	Graphite	
5	Headpiece	1.4404	A 276 Grade 316L
6	Bolts	1.4571/A4	similar A 194 B8T
8	Stem	1.4404	A 276 Grade 316L
9	Gland packing	Graphite / PTFE / MICA	
10	Gland nut	1.4404	A 276 Grade 316L
11	Handwheel	1.4409	A 351 CF3M
12	Spring	1.4571	A 313 Grade 316Ti
13	Bush	CW452K	B 159 UNS C51900

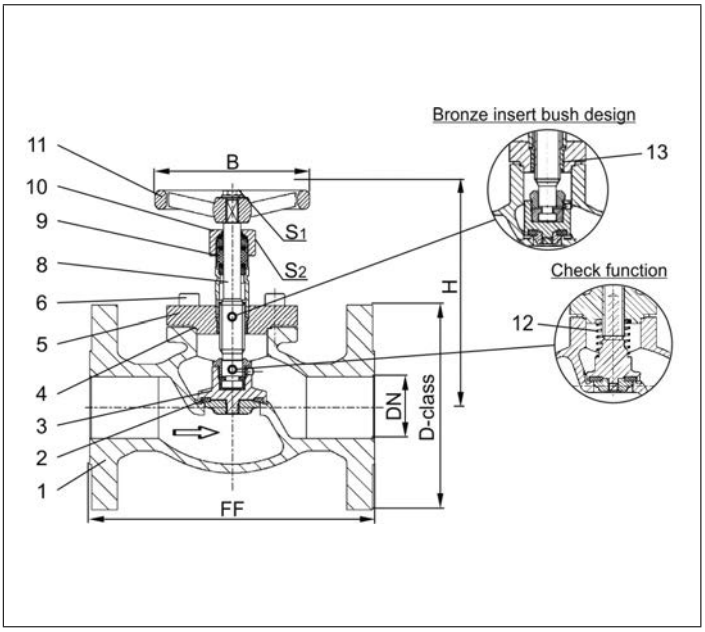

Type 03851 - Standard design	Technical data									
Nominal size	**DN**	**15**	**20**	**25**	**40**	**50**	**65**	**80**	**100**	**150**
Dimension code - Flange ANSI B16.5 class 150	.X.	0400	0600	1000	1400	2000	2400	3000	4000	6000
Flange-Ø	D-class	90	100	110	125	150	180	190	230	280
Face-to-face dimension	FF	140	150	160	200	230	290	310	350	577
Height	H	130	130	140	170	200	260	310	350	380
Handwheel-Ø	B	100	100	100	125	125	200	250	315	360
Wrench size across flats	S_1	7	7	7	10	10	10	10	12	15
Wrench size across flats	S_2	30	30	30	36	36	36	36	41	41
Weight	ca. kg	3.0	3.5	4.5	9.0	13.0	21.0	28.0	42.0	83.0
Kvs-Value	m^3/h	4.3	6.7	11.5	22.6	37.1	71.1	104.0	170.0	350.0
Cv-Value	gal/min	5.0	7.8	13.4	26.3	43.2	82.9	121.3	198.3	408.4

Dimensions in mm. Compliance of tightness requirements acc. to EN 1626 for DN150 up to 20 bar differential pressure. In the range of >20-40 bar, 350-700ml per second (1 bar, 20°C [68°F]) are reached.

Fire Safe and Offshore Valves

Type 01841 - Globe Valve

Cryogenic-Globe and Globe/Check Valves, PN50 (DN65=PN45, DN150=PN40)
“ Fire safe ” type test approval acc. to EN ISO 10497

Stainless steel body and topwork,
“ live loaded ” gland packing
“ cleaned and degreased for oxygen service ”

Part No. 01841.X.001* (H = 270mm)
Part No. 01841.X.002* (H = 370mm)
Part No. 01841.X.501* (H = 270mm) Globe/Check Valve
Part No. 01841.X.502* (H = 370mm) Globe/Check Valve
* Butt weld connection for stainless steel pipes acc. to ISO 1127 or ASTM A312

Part No. 01841.X.0014 (H = 270mm)
Part No. 01841.X.0024 (H = 370mm)
Part No. 01841.X.5014 (H = 270mm) Globe/Check Valve
Part No. 01841.X.5024 (H = 370mm) Globe/Check Valve
Socket weld connection for stainless steel pipes acc. to ISO 1127 or ASTM A312

Available options - on request only:
· Extension H up to 900mm
· Valve with control disc (tapered design)

Applications:
Approved for air gases, vapours and cryogenic liquefied gases incl. LNG.
Working temperature: -255°C / -427°F (18K) up to +120°C / +248°F (393K)

Materials		DIN EN	ASTM
1	Body	1.4409	A 351 CF3M
2	Valve seal	PTFE / Carbon filled (25%)	
3	Disc	1.4404	A 276 Grade 316L
4	Bonnet gasket	Graphite	
5	Headpiece	1.4404	A 276 Grade 316L
6	Bolts	1.4571/A4	similar A 194 B8T
7	Elongation tube	1.4571	A 213 TP 316Ti
8	Stem	1.4404	A 276 Grade 316L
9	Gland packing	Graphite / PTFE / MICA	
10	Gland nut	1.4404	A 276 Grade 316L
11	Handwheel	1.4409	A 351 CF3M
12	Spring	1.4571	A 313 Grade 316Ti
13	Bush	CW452K	B 159 UNS C51900

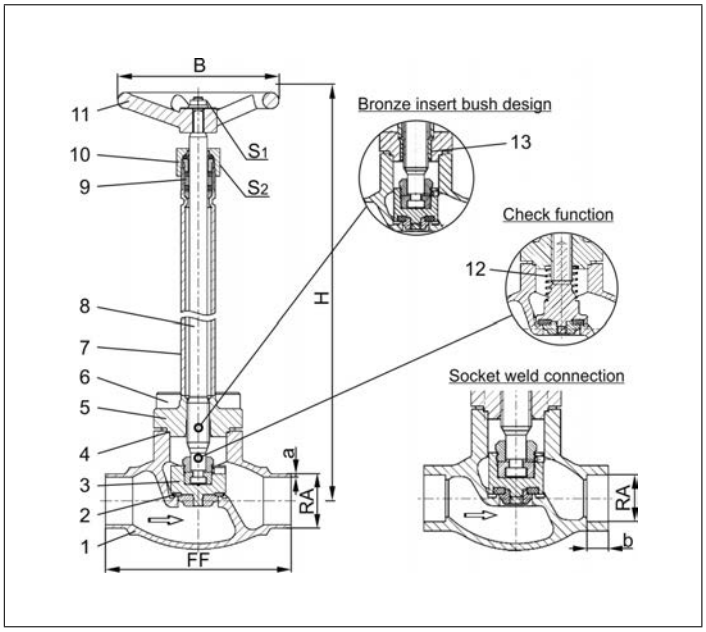

Type 01841 - Standard design	Technical data													
Nominal size	**DN**	**10**	**15**	**15**	**20**	**25**	**32**	**40**	**40**	**50**	**65**	**80**	**100**	**150**
Dimension code	.X.	1012	1517	1521	2026	2533	3238	4042	4048	5060	657x	8088	0114	0168
Face-to-face dimension	FF	70	85	85	100	115	115	130	130	155	205	245	280	400
Height	H	270 mm or 370 mm											370	420
Outside pipe-Ø ISO 1127	RA	12.0	17.2	21.3	26.9	33.7	38.0	42.4	48.3	60.3	76.1	88.9	114.3	168.3
Wall thickness pipe ISO 1127	a	1.0	1.6	2.0	2.0	2.0	2.0	2.0	2.0	2.0	2.9	3.2	6.0	7.1
Outside pipe-Ø ASTM A312	RA	13.72	17.15	21.34	26.67	33.40	-	42.16	48.26	60.33	73.03	88.90	114.3	168.3
Wall thickness pipe ASTM A312	a	dimensions acc. to S10 or S40												
Socket depth	b	6	10	10	13	13	-	13	13	16	16	16	20	20
Handwheel-Ø	B	100	100	100	100	100	125	125	125	125	200	250	315	360
Wrench size across flats	S_1	7	7	7	7	7	10	10	10	10	10	10	12	15
Wrench size across flats	S_2	30	30	30	30	30	36	36	36	36	36	36	41	41
Weight	ca. kg	1.4	1.65	1.7	2.1	2.4	3.3	4.7	4.7	7.2	12.7	17.0	24.5	54.0
Kvs-Value	m^3/h	1.6	3.8	4.3	6.7	11.5	14.0	20.6	22.6	37.1	71.1	104.0	170.0	350.0
Cv-Value	gal/min	1.9	4.4	5.0	7.8	13.4	16.2	23.9	26.3	43.2	82.9	121.3	198.3	408.4

Dimensions in mm. Compliance of tightness requirements acc. to EN 1626 for DN150 up to 20 bar differential pressure. In the range of >20-40 bar, 350-700ml per second (1 bar, 20°C [68°F]) are reached.

Edition 2022-11

Fire Safe and Offshore Valves
Type 01841 - Globe Valve

Cryogenic Globe Valves, DN200
“ Fire safe ” type test approval acc. to EN ISO 10497

Stainless steel body and topwork
" live loaded " gland packing

Part No. 01841.0219.001* (H=560), PN20/PN25
Part No. 01841.0219.006* (H=1000), PN20/PN25
*Butt weld connection for stainless steel pipes acc. to ISO 1127 or ASTM A312

Part No. 01841.0219.00*4, PN25
Socket weld connection for stainless steel pipes acc. to ISO 1127 or ASTM A312

In flow direction, the valve with the nominal size DN200 is conform to tightness class L1 up to 9 bar maximum differential pressure acc. to DIN 12567 for LNG use.
This standard can also be used for the tightness class of other cryogenic gases.

Available options - on request only

Applications:
Approved for air gases, vapours and cryogenic liquefied gases incl. LNG.
Working temperature: -196°C / -321°F (77K) up to +120°C / +248°F (393K)

Materials		DIN EN	ASTM
1	Body	1.4409	A 351 CF3M
2	Valve seal	PTFE / Carbon filled (25%)	
3	Disc	1.4404	A 276 Grade 316L
4	Bonnet gasket	Graphite	
5	Headpiece	1.4404	A 276 Grade 316L
6	Bolts	1.4571/A4	similar A 194 B8T
7	Elongation tube	1.4571	A 213 TP 316Ti
8	Stem	1.4404	A 276 Grade 316L
9	Gland packing	Graphite / PTFE / MICA	
10	Gland nut	1.4404	A 276 Grade 316L
11	Handwheel	1.4409	A 351 CF3M
13	Bush	CW452K	B 159 UNS C51900

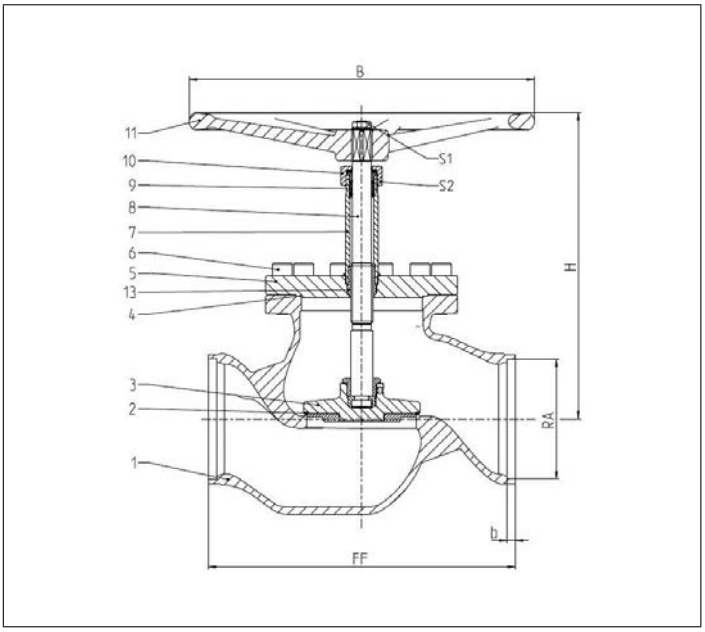

Type 01841 - Standard design	Technical data	
Nominal size	**DN**	**200**
Dimension code	.X.	0219
Face-to-face dimension	FF	560
Height	H	560
Outside pipe-Ø ISO 1127	RA	219.1
Wall thickness pipe ISO 1127	a	6.3
Outside pipe-Ø ASTM A312	RA	219.1
Wall thickness pipe ASTM A312	a	dimensions acc. to S10 or S40
Socket depth	b	15
Handwheel-Ø	B	630
Wrench size across flats	S_1	30
Wrench size across flats	S_2	65
Weight	ca. kg	135
Kvs-Value	m^3/h	680
Cv-Value	gal/min	793

Dimensions in mm.

Fire Safe and Offshore Valves

Type 01845 - Globe Valve

Cryogenic-Globe and Globe/Check Valves, PN50
“ Fire safe ” type test approval acc. to EN ISO 10497

Stainless steel body and topwork,
“ live loaded ” gland packing
“ cleaned and degreased for oxygen service "

Part No. 01845.X.0011 (H = 270mm)
Part No. 01845.X.0021 (H = 370mm)
Part No. 01845.X.5011 (H = 270mm) Globe/Check Valve
Part No. 01845.X.5021 (H = 370mm) Globe/Check Valve
Female thread connection (G) acc. to ISO 228/1

Part No. 01845.X.0016 (H = 270mm)
Part No. 01845.X.0026 (H = 370mm)
Part No. 01845.X.5016 (H = 270mm) Globe/Check Valve
Part No. 01845.X.5026 (H = 370mm) Globe/Check Valve
Female thread connection NPT acc. to ANSI B 1.20.1

Available options - on request only:
· Female thread connection (R) acc. to ISO 7-Rc
· Extension H up to 900mm · Valve with control disc (tapered design)

Applications:
Approved for air gases, vapours and cryogenic liquefied gases incl. LNG.
Working temperature: -255°C / -427°F (18K) up to +120°C / +248°F (393K)

Materials		DIN EN	ASTM
1	Body	1.4409	A 351 CF3M
2	Valve seal	PTFE / Carbon filled (25%)	
3	Disc	1.4404	A 276 Grade 316L
4	Bonnet gasket	Graphite	
5	Headpiece	1.4404	A 276 Grade 316L
6	Bolts	1.4571/A4	similar A 194 B8T
7	Elongation tube	1.4571	A 213 TP 316 Ti
8	Stem	1.4404	A 276 Grade 316L
9	Gland packing	Graphite / PTFE / MICA	
10	Gland nut	1.4404	A 276 Grade 316L
11	Handwheel	1.4409	A 351 CF3M
12	Spring	1.4571	A 313 Grade 316Ti
13	Bush	CW452K	B 159 UNS C51900

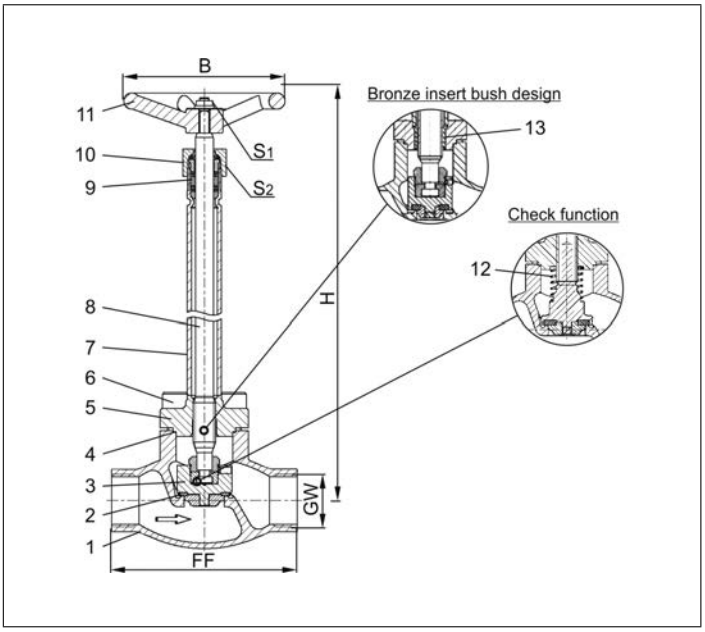

Type 01845 - Standard design	Technical data								
Nominal size	**DN**	**10**	**10**	**15**	**20**	**25**	**40**	**40**	**50**
Thread size	GW	1/4	3/8	1/2	3/4	1	1-1/4	1-1/2	2
Dimension code	.X.	0200	0300	0400	0600	1000	1200	1400	2000
Face-to-face dimension	FF	70	70	85	100	115	130	130	155
Height	H	270 mm or 370 mm							
Handwheel-Ø	B	100	100	100	100	100	125	125	125
Wrench size across flats	S_1	7	7	7	7	7	10	10	10
Wrench size across flats	S_2	30	30	30	30	30	36	36	36
Weight	ca. kg	1.4	1.4	1.7	2.1	2.4	4.7	4.7	7.2
Kvs-Value	m^3/h	1.6	2.2	4.3	6.7	11.5	20.6	22.6	37.1
Cv-Value	gal/min	1.9	2.6	5.0	7.8	13.4	23.9	26.3	43.2

Dimensions in mm.

Edition 2022-11

Fire Safe and Offshore Valves

Type 03841 - Globe Valve

Cryogenic-Globe and Globe/Check Valves, PN40
“ Fire safe ” type test approval acc. to EN ISO 10497

Stainless steel body and topwork,
“ live loaded ” gland packing
“ cleaned and degreased for oxygen service "

Part No. 03841.X.0012 (H = 270mm)
Part No. 03841.X.0022 (H = 370mm)
Part No. 03841.X.5012 (H = 270mm) Globe/Check Valve
Part No. 03841.X.5022 (H = 370mm) Globe/Check Valve
Flanged connection acc. to DIN EN 1092-1 PN40

Applications:
Approved for air gases, vapours and cryogenic liquefied gases incl. LNG.
Working temperature: -255°C / -427°F (18K) up to +120°C / +248°F (393K)

Materials		DIN EN	ASTM
1	Body	1.4409	A 351 CF3M
2	Valve seal	PTFE / Carbon filled (25%)	
3	Disc	1.4404	A 276 Grade 316L
4	Bonnet gasket	Graphite	
5	Headpiece	1.4404	A 276 Grade 316L
6	Bolts	1.4571/A4	similar A 194 B8T
7	Elongation tube	1.4571	A 213 TP 316Ti
8	Stem	1.4404	A 276 Grade 316L
9	Gland packing	Graphite / PTFE / MICA	
10	Gland nut	1.4404	A 276 Grade 316L
11	Handwheel	1.4409	A 351 CF3M
12	Spring	1.4571	A 313 Grade 316Ti
13	Bush	CW452K	B 159 UNS C51900

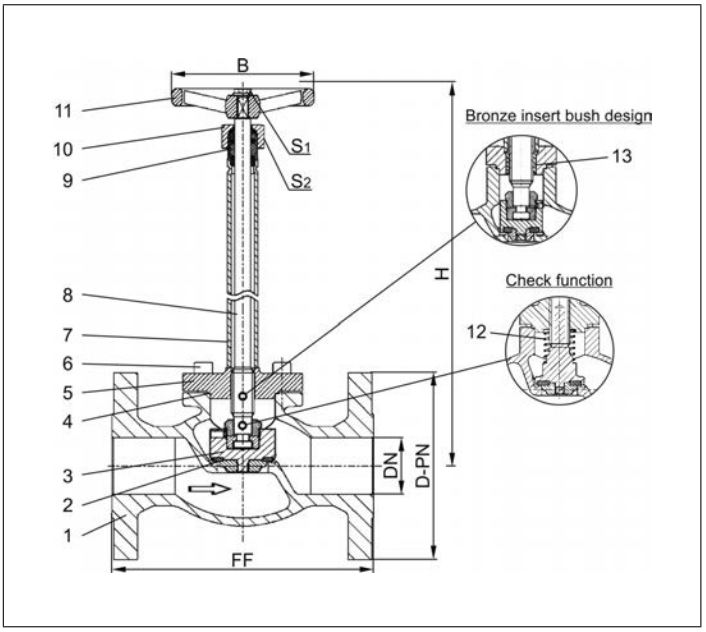

Type 03841 - Standard design	Technical data									
Nominal size	**DN**	**15**	**20**	**25**	**40**	**50**	**65**	**80**	**100**	**150**
Dimension code - Flange EN 1092-1 PN40	.X.	0150	0200	0250	0400	0500	0650	0800	1000	1500
Flange-Ø	D-PN	95	105	115	150	165	185	200	235	300
Face-to-face dimension	FF	140	150	160	200	230	290	310	350	550
Height	H	270 mm or 370 mm							400	420
Handwheel-Ø	B	100	100	100	125	125	200	250	315	360
Wrench size across flats	S_1	7	7	7	10	10	10	10	12	15
Wrench size across flats	S_2	30	30	30	36	36	36	36	41	41
Weight	ca. kg	3.0	3.5	5.0	9.0	13.0	21.0	28.0	42.0	83.0
Kvs-Value	m^3/h	4.3	6.7	11.5	22.6	37.1	71.1	104.0	170.0	350.0
Cv-Value	gal/min	5.0	7.8	13.4	26.3	43.2	82.9	121.3	198.3	408.4

Dimensions in mm. Compliance of tightness requirements acc. to EN 1626 for DN150 up to 20 bar differential pressure. In the range of >20-40 bar, 350-700ml per second (1 bar, 20°C [68°F]) are reached.

Fire Safe and Offshore Valves

Type 03841 - Globe Valve

Cryogenic-Globe and Globe/Check Valves, class 300
“ Fire safe ” type test approval acc. to EN ISO 10497

Stainless steel body and topwork,
“ live loaded ” gland packing
“ cleaned and degreased for oxygen service "

Part No. 03841.X.0013 (H = 270mm)
Part No. 03841.X.0023 (H = 370mm)
Part No. 03841.X.5013 (H = 270mm) Globe/Check Valve
Part No. 03841.X.5023 (H = 370mm) Globe/Check Valve
Flanged connection acc. to ANSI B16.5 class 300

Applications:
Approved for air gases, vapours and cryogenic liquefied gases incl. LNG.
Working temperature: -255°C / -427°F (18K) up to +120°C / +248°F (393K)

Materials		DIN EN	ASTM
1	Body	1.4409	A 351 CF3M
2	Valve seal	PTFE / Carbon filled (25%)	
3	Disc	1.4404	A 276 Grade 316L
4	Bonnet gasket	Graphite	
5	Headpiece	1.4404	A 276 Grade 316L
6	Bolts	1.4571/A4	similar A 194 B8T
7	Elongation tube	1.4571	A 213 TP 316Ti
8	Stem	1.4404	A 276 Grade 316L
9	Gland packing	Graphite / PTFE / MICA	
10	Gland nut	1.4404	A 276 Grade 316L
11	Handwheel	1.4409	A 351 CF3M
12	Spring	1.4571	A 313 Grade 316Ti
13	Bush	CW452K	B 159 UNS C51900

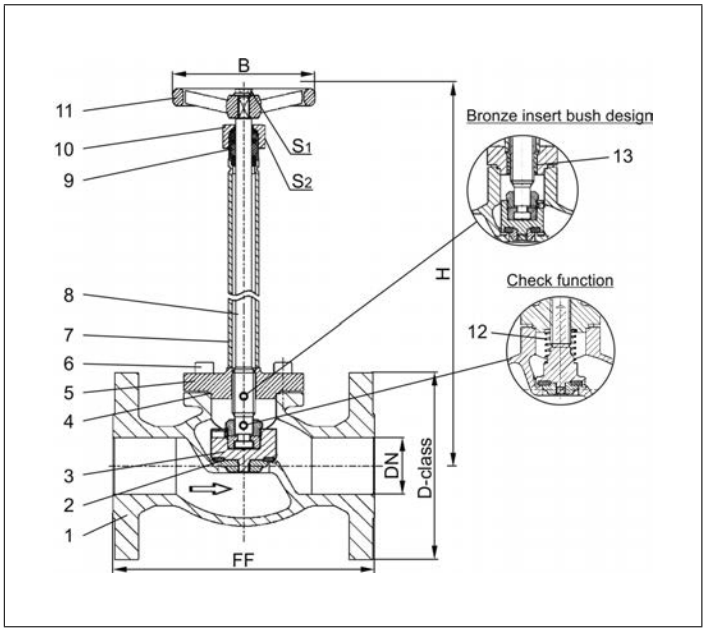

Type 03841 - Standard design	Technical data									
Nominal size	**DN**	**15**	**20**	**25**	**40**	**50**	**65**	**80**	**100**	**150**
Dimension code - Flange ANSI B16.5 class 300	.X.	0400	0600	1000	1400	2000	2400	3000	4000	6000
Flange-Ø	D-class	95	115	125	155	165	190	210	255	320
Face-to-face dimension	FF	140	150	160	200	230	290	310	350	597
Height	H	270 mm or 370 mm							400	420
Handwheel-Ø	B	100	100	100	125	125	200	250	315	360
Wrench size across flats	S_1	7	7	7	10	10	10	10	12	15
Wrench size across flats	S_2	30	30	30	36	36	36	36	41	41
Weight	ca. kg	3.0	3.5	5.0	9.0	13.0	21.0	28.0	42.0	83.0
Kvs-Value	m^3/h	4.3	6.7	11.5	22.6	37.1	71.1	104.0	170.0	350.0
Cv-Value	gal/min	5.0	7.8	13.4	26.3	43.2	82.9	121.3	198.3	408.4

Dimensions in mm. Compliance of tightness requirements acc. to EN 1626 for DN150 up to 20 bar differential pressure. In the range of >20-40 bar, 350-700ml per second (1 bar, 20°C [68°F]) are reached.

Edition 2022-11

Fire Safe and Offshore Valves
Type 03841 - Globe Valve

Cryogenic-Globe and Globe/Check Valves, class 150
“ Fire safe ” type test approval acc. to EN ISO 10497

Stainless steel body and topwork,
“ live loaded ” gland packing
“ cleaned and degreased for oxygen service "

Part No. 03841.X.0011 (H = 270mm)
Part No. 03841.X.0021 (H = 370mm)
Part No. 03841.X.5011 (H = 270mm) Globe/Check Valve
Part No. 03841.X.5021 (H = 370mm) Globe/Check Valve
Flanged connection acc. to ANSI B16.5 class 150

Applications:
Approved for air gases, vapours and cryogenic liquefied gases incl. LNG.
Working temperature: -255°C / -427°F (18K) up to +120°C / +248°F (393K)

Materials		DIN EN	ASTM
1	Body	1.4409	A 351 CF3M
2	Valve seal	PTFE / Carbon filled (25%)	
3	Disc	1.4404	A 276 Grade 316L
4	Bonnet gasket	Graphite	
5	Headpiece	1.4404	A 276 Grade 316L
6	Bolts	1.4571/A4	similar A 194 B8T
7	Elongation tube	1.4571	A 213 TP 316Ti
8	Stem	1.4404	A 276 Grade 316L
9	Gland packing	Graphite / PTFE / MICA	
10	Gland nut	1.4404	A 276 Grade 316L
11	Handwheel	1.4409	A 351 CF3M
12	Spring	1.4571	A 313 Grade 316Ti
13	Bush	CW452K	B 159 UNS C51900

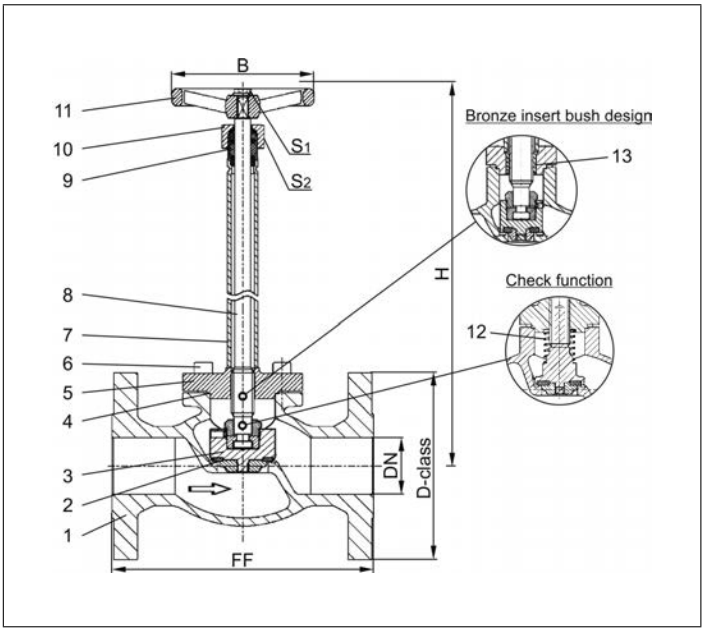

Type 03841 - Standard design	Technical data									
Nominal size	**DN**	**15**	**20**	**25**	**40**	**50**	**65**	**80**	**100**	**150**
Dimension code - Flange ANSI B16.5 class 150	.X.	0400	0600	1000	1400	2000	2400	3000	4000	6000
Flange-Ø	D-class	90	100	110	125	150	180	190	230	280
Face-to-face dimension	FF	140	150	160	200	230	290	310	350	577
Height	H	270 mm or 370 mm							400	420
Handwheel-Ø	B	100	100	100	125	125	200	250	315	360
Wrench size across flats	S_1	7	7	7	10	10	10	10	12	15
Wrench size across flats	S_2	30	30	30	36	36	36	36	41	41
Weight	ca. kg	3.0	3.5	5.0	9.0	13.0	21.0	28.0	42.0	83.0
Kvs-Value	m^3/h	4.3	6.7	11.5	22.6	37.1	71.1	104.0	170.0	350.0
Cv-Value	gal/min	5.0	7.8	13.4	26.3	43.2	82.9	121.3	198.3	408.4

Dimensions in mm. Compliance of tightness requirements acc. to EN 1626 for DN150 up to 20 bar differential pressure. In the range of >20-40 bar, 350-700ml per second (1 bar, 20°C [68°F]) are reached.

Fire Safe and Offshore Valves
Type 03841 - Globe Valve

Cryogenic-Globe and Globe/Check Valves, class 150
“ Fire safe ” type test approval acc. to EN ISO 10497

Stainless steel body and topwork,
“ live loaded ” gland packing

Part No. 03841.8000.0011 (H=560)
Flanged connection acc. to ANSI B16.5 class 150

In flow direction, the valve with the nominal size DN200 is conform to tightness class L1 up to 12 bar maximum differential pressure acc. to DIN 12567 for LNG use.
This standard can also be used for the tightness class of other cryogenic gases.

Available options - on request only

Applications:
Approved for air gases, vapours and cryogenic liquefied gases incl. LNG.
Working temperature: -196°C / -321°F (77K) up to +120°C / +248°F (393K)

Materials		DIN EN	ASTM
1	Body	1.4409	A 351 CF3M
1a	Flange	1.4404	A 276 Grade 316L
2	Valve seal	PTFE / Carbon filled (25%)	
3	Disc	1.4404	A 276 Grade 316L
4	Bonnet gasket	Graphite	
5	Headpiece	1.4404	A 276 Grade 316L
6	Bolts	1.4571/A4	similar A 194 B8T
7	Elongation tube	1.4571	A 213 TP 316Ti
8	Stem	1.4404	A 276 Grade 316L
9	Gland packing	Graphite / PTFE / MICA	
10	Gland nut	1.4404	A 276 Grade 316L
11	Handwheel	1.4409	A 351 CF3M
12	Spring	1.4571	A 313 Grade 316Ti
13	Bush	CW452K	B 159 UNS C51900

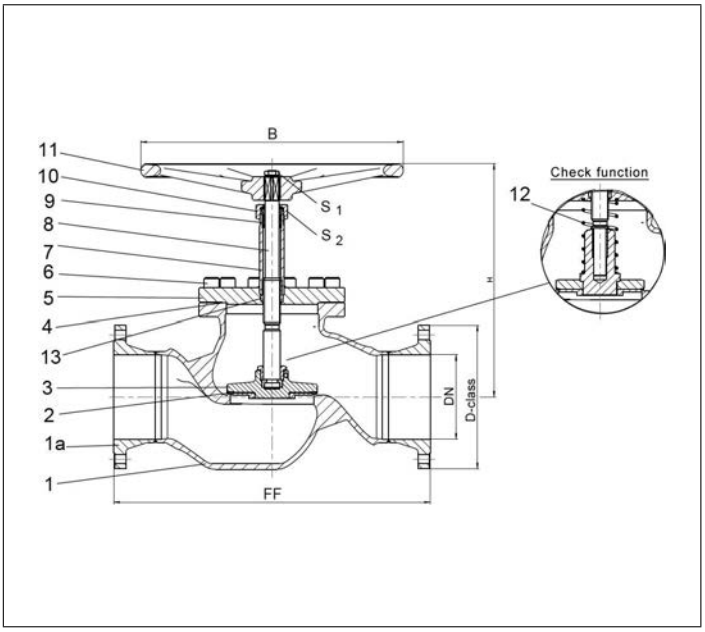

Type 03841 - Standard design	Technical data	
Nominal size	**DN**	**200**
Dimension code	.X.	8000
Flange-Ø	D-class	345
Face-to-face dimension	FF	760
Height	H	560
Handwheel-Ø	B	630
Wrench size across flats	S_1	30
Wrench size across flats	S_2	65
Weight	ca. kg	135
Kvs-Value	m^3/h	680
Cv-Value	gal/min	793

Dimensions in mm.

Edition 2022-11

Fire Safe and Offshore Valves

Type 01282 - Bellow Sealed Globe Valve

"Fire Safe"-design without fire type-testing according to EN ISO 10497

Cryogenic-Bellow Sealed Globe Valve, PN50
Stainless steel body and topwork,
“ live loaded ” gland packing
“ cleaned and degreased for oxygen service "

Part No. 01282.X.002*
* Butt weld connection for stainless steel pipes acc. to ISO 1127 or ASTM A312
Part No. 01282.X.0024
Socket weld connection for stainless steel pipes acc. to ISO 1127 or ASTM A312

Available options - on request only:
· Welded stainless steel stubs acc. to ISO 1127 or ASTM A312 - length FF + 200mm
· Extension H up to 900mm

Applications:
Approved for air gases, vapours and cryogenic liquefied gases incl. LNG.
Working temperature: -255°C / -427°F (18K) up to +120°C / +248°F (393K)
Leak rate: 10^{-6} mbar ltr / sec outside, 10^{-4} mbar ltr / sec seat

Materials		DIN EN	ASTM
1	Body	1.4409	A 351 CF3M
2	Valve seal	PTFE / carbon filled (25%)	
3	Disc	1.4404	A 276 Grade 316L
4	Bonnet gasket	Graphite	
5	Headpiece	1.4404	A 276 Grade 316L
6	Bellow stem	1.4571	A 313 Grade 316Ti
7	Bolts	1.4571/A4	similar A 194 B8T
8	Bellow	1.4571	A 313 Grade 316Ti
9	Elongation tube	1.4571	A 313 Grade 316Ti
10	Headpiece	1.4404	A 276 Grade 316L
11	Bush	CW452K	B 159 UNS C51900
12	Stem	1.4404	A 276 Grade 316L
13	Gland packing	Graphite / PTFE / MICA	
14	Gland nut	1.4404	A 276 Grade 316L
15	Handwheel	1.4409	A 351 CF3M

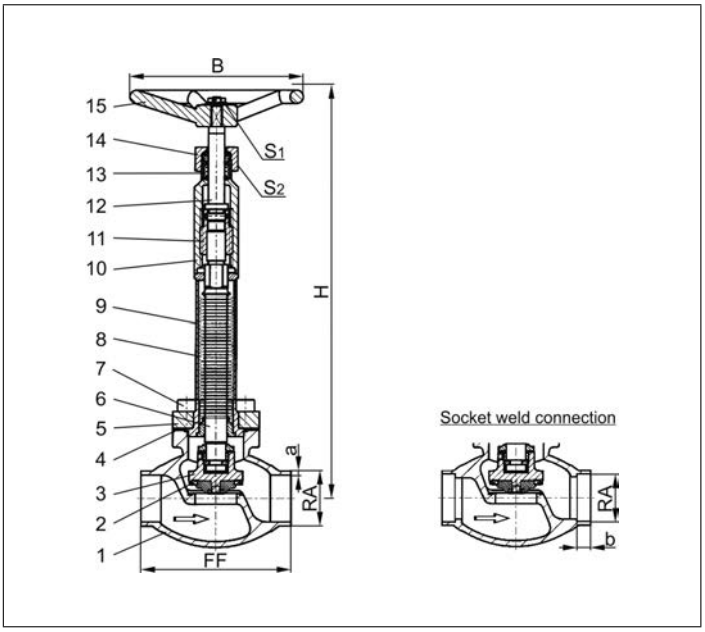

Type 01282 - Standard design	Technical data									
Nominal size	**DN**	**10**	**15**	**15**	**20**	**25**	**32**	**40**	**40**	**50**
Dimension code	.X.	1012	1517	1521	2026	2533	3238	4042	4048	5060
Face-to-face dimension	FF	70	85	85	100	115	115	130	130	155
Height	H	380	380	380	380	380	380	380	380	380
Outside pipe-Ø ISO 1127	RA	12.0	17.2	21.3	26.9	33.7	38.0	42.4	48.3	60.3
Wall thickness pipe ISO 1127	a	1.0	1.6	2.0	2.0	2.0	2.0	2.0	2.0	2.0
Outside pipe-Ø ASTM A312	RA	13.72	17.15	21.34	26.67	33.40	-	42.16	48.26	60.33
Wall thickness pipe ASTM A312	a	dimensions acc. to S10 or S40								
Socket depth	b	6	10	10	13	13	-	13	13	16
Handwheel-Ø	B	150	150	150	150	150	150	150	150	150
Wrench size across flats	S_1	7	7	7	7	7	10	10	10	10
Wrench size across flats	S_2	30	30	30	30	30	36	36	36	36
Weight	ca. kg	1.6	1.85	1.9	2.3	2.7	3.6	5.1	5.1	7.7
Kvs-Value	m^3/h	1.6	2.8	4.3	6.7	11.5	14.0	20.6	22.6	37.1
Cv-Value	gal/min	1.9	3.3	5.0	7.8	13.4	16.2	23.9	26.3	43.2

Dimensions in mm.

Fire Safe and Offshore Valves

Type 01843 - Actuated Globe Valve

Cryogenic-Globe Valves with Pneumatic Actuator, PN50 (DN65=PN45, DN150=PN40)
“ Fire safe ” type test approval acc. to EN ISO 10497

Stainless steel body and topwork
Actuator - air opens, spring closes
“ live loaded ” gland packing
“ cleaned and degreased for oxygen service " - the actuator is not cleaned and degreased for oxygen

Part No. 01843.X.*01*
Butt weld connection for stainless steel pipes acc. to ISO 1127 or ASTM A312

Part No. 01843.X.*014
Socket weld connection for stainless steel pipes acc. to ISO 1127 or ASTM A312

Available accessories:
· Solenoid valve · Limit switch
· Electropneumatic positioner etc.

Available options - on request only:
· Welded stainless steel stubs acc. to ISO 1127 or ASTM A312 - length FF + 200mm
· Actuator “ cleaned and degreased for oxygen sevice ”

Applications:
Approved for air gases, vapours and cryogenic liquefied gases incl. LNG.
Working temperature: -255°C / -427°F (18K) up to +120°C / +248°F (393K)

Materials		DIN EN	ASTM
1	Body	1.4409	A 351 CF3M
2	Valve seal	PTFE / Carbon filled (25%)	
3	Disc	1.4404	A 276 Grade 316L
4	Bonnet gasket	Graphite	
5	Headpiece	1.4404	A 276 Grade 316L
6	Bolts	1.4571/A4	similar A 194 B8T
7	Elongation tube	1.4571	A 213 TP 316Ti
8	Stem	1.4404	A 276 Grade 316L
9	Gland packing	Graphite / PTFE / MICA	
10	Gland nut	1.4404	A 276 Grade 316L
11	Pillars	1.4404	A 276 Grade 316L
12	Bush	CW452K	B 159 UNS C51900

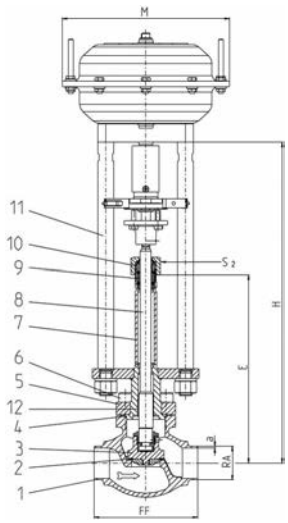

KOREA GAS SAFETY CORPORATION

Type 01843 - Standard design	Technical data													
Nominal size	**DN**	**10**	**15**	**15**	**20**	**25**	**32**	**40**	**40**	**50**	**65**	**80**	**100**	**150**
Dimension code	.X.	1012	1517	1521	2026	2533	3238	4042	4048	5060	657x	8088	0114	0168
Face-to-face dimension	FF	70	85	85	100	115	115	130	130	155	205	245	280	400
Height	H	370	370	370	370	375	405	420	420	425	510	575	635	685
Length	E	195	195	195	200	200	230	230	230	235	300	300	300	300
Outside pipe-Ø ISO 1127	RA	12.0	17.2	21.3	26.9	33.7	38.0	42.4	48.3	60.3	76.1	88.9	114.3	168.3
Wall thickness pipe ISO 1127	a	1.0	1.6	2.0	2.0	2.0	2.0	2.0	2.0	2.0	2.9	3.2	6.0	7.1
Outside pipe-Ø ASTM A312	RA	13.72	17.15	21.34	26.67	33.40	-	42.16	48.26	60.33	73.03	88.90	114.3	168.3
Wall thickness pipe ASTM A312	a	dimensions acc. to S10 or S40												
Socket depth	b	6	10	10	13	13	-	13	13	16	16	16	20	20
Actuator-Ø	M	dependent on actuator												
Wrench size across flats	S_2	30	30	30	30	30	36	36	36	36	36	36	41	41
Weight w/o actuator	ca. kg	1.9	2.15	2.2	2.4	3.1	3.8	6.5	6.5	9.0	15.2	20.0	28.0	60.9
*Kvs-Value	m^3/h	1.6	3.8	4.3	6.7	11.5	14.0	20.6	22.6	37.1	71.1	104.0	170.0	350.0
*Cv-Value	gal/min	1.9	4.4	5.0	7.8	13.4	16.2	23.9	26.3	43.2	82.9	121.3	198.3	408.4
Stroke	mm	10	10	10	7	9	9	11	11	15	23	23	30	40

Dimensions in mm. Compliance of tightness requirements acc. to EN 1626 for DN150 up to 20 bar differential pressure. In the range of >20-40 bar, 350-700ml per second (1 bar, 20°C [68°F]) are reached. * These figures refer to measurements for the flow direction.

Edition 2022-11

Fire Safe and Offshore Valves

Type 01843 - Actuated Globe Valve

Cryogenic-Globe Valves with Pneumatic Actuator, PN20/25
“ Fire safe ” type test approval acc. to EN ISO 10497

Stainless steel body and topwork
Actuator - air opens, spring closes or contrary
" live loaded " gland packing

Part No. 01843.0219.*01*
Butt weld connection for stainless steel pipes acc. to ISO 1127 or ASTM A312
Part No. 01843.0219.*014
Socket weld connection for stainless steel pipes acc. to ISO 1127 or ASTM A312

In flow direction, the valve with the nominal size DN200 is conform to tightness class L1 up to 18 bar maximum differential pressure acc. to DIN 12567 for LNG use.
This standard can also be used for the tightness class of other cryogenic gases.

Available accessories/options - on request only:
· Solenoid valve · Limit switch · Electropneumatic positioner etc.
· Welded stainless steel stubs acc. to ISO 1127 or ASTM A312
· Actuator " cleaned and degreased for oxygen service "
· Valve with check or control disc (tapered design)

Applications:
Approved for air gases, vapours and cryogenic liquefied gases incl. LNG.
Working temperature: -196°C / -321°F (77K) up to +120°C / +248°F (393K)

Materials		DIN EN	ASTM
1	Body	1.4409	A 351 CF3M
2	Valve seal	PTFE / Carbon filled (25%)	
3	Disc	1.4404	A 276 Grade 316L
4	Bonnet gasket	Graphite	
5	Headpiece	1.4404	A 276 Grade 316L
6	Bolts	1.4571/A4	similar A 194 B8T
7	Elongation tube	1.4571	A 213 TP 316Ti
8	Stem	1.4404	A 276 Grade 316L
9	Gland packing	Graphite / PTFE / MICA	
10	Gland nut	1.4404	A 276 Grade 316L
11	Pillars	1.4404	A 276 Grade 316L
12	Bush	CW452K	B 159 UNS C51900

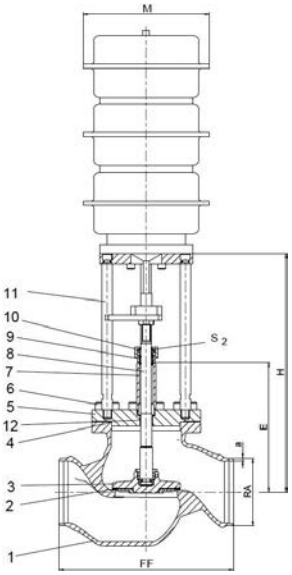

KOREA GAS SAFETY CORPORATION

Type 01843 - Standard design	Technical data	
Nominal size	**DN**	**200**
Face-to-face dimension	FF	560
Height	H	785
Length	E	410
Outside pipe-Ø ISO 1127	RA	219.1
Wall thickness pipe ISO 1127	a	6.3
Outside pipe-Ø ASTM A312	RA	219.1
Wall thickness pipe ASTM A312	a	dimensions acc. to S10 or S40
Socket depth	b	15
Actuator-Ø	M	depent on actuator
Wrench size across flats	S_2	65
Weight w/o actuator	ca. kg	165.0
*Kvs-Value	m^3/h	680.0
*Cv-Value	gal/min	793.0
Stroke	mm	60

Dimensions in mm. * These figures refer to measurements for the flow direction.

Fire Safe and Offshore Valves

Type 03843 - Actuated Globe Valve

Cryogenic-Globe Valves with Pneumatic Actuator, PN16
“ Fire safe ” type test approval acc. to EN ISO 10497

Stainless steel body and topwork
Actuator - air opens, spring closes or vice versa
" live loaded " gland packing
" cleaned and degreased for oxygen service " - the actuator is not cleaned and degreased for oxygen
Part No. 03843.X.*014
Flanged connection acc. to DIN EN 1092-1 PN16

Available accessories:
· Solenoid valve
· Limit switch
· Electropneumatic positioner etc.
Available options - on request only:
· Actuator - " cleaned and degreased for oxygen service "
· Electric actuator
· Valve with check disc
· Valve with control disc (tapered design)

Applications:
Approved for air gases, vapours and cryogenic liquefied gases incl. LNG.
Working temperature: -255°C / -427°F (18K) up to +120°C / +248°F (393K)

Materials		DIN EN	ASTM
1	Body	1.4409	A 351 CF3M
2	Valve seal	PTFE / Carbon filled (25%)	
3	Disc	1.4404	A 276 Grade 316L
4	Bonnet gasket	Graphite	
5	Headpiece	1.4404	A 276 Grade 316L
6	Bolts	1.4571/A4	similar A 194 B8T
7	Elongation tube	1.4571	A 213 TP 316Ti
8	Stem	1.4404	A 276 Grade 316L
9	Gland packing	Graphite / PTFE / MICA	
10	Gland nut	1.4404	A 276 Grade 316L
11	Pillars	1.4404	A 276 Grade 316L
12	Bush	CW452K	B 159 UNS C51900

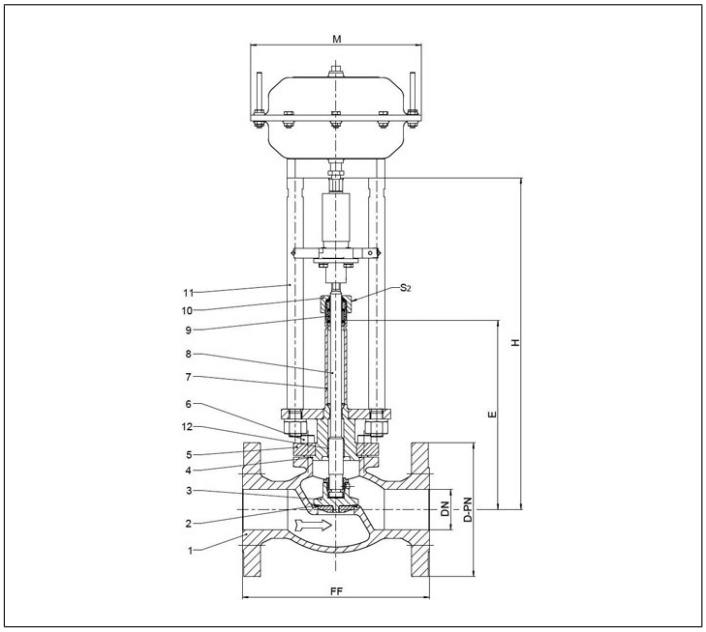

KOREA GAS SAFETY CORPORATION

Type 03843 - Standard design	Technical data									
Nominal size	**DN**	**15**	**20**	**25**	**40**	**50**	**65**	**80**	**100**	**150**
Dimension code - Flange EN 1092-1 PN16	.X.	0150	0200	0250	0400	0500	0650	0800	1000	1500
Flange-Ø	D-PN	95	105	115	150	165	185	200	220	285
Face-to-face dimension	FF	140	150	160	200	230	295	310	350	510
Height	H	370	370	375	420	425	510	575	635	685
Length	E	195	200	200	230	235	300	300	300	350
Actuator-Ø	M	dependent on actuator								
Wrench size across flats	S_2	30	30	30	36	36	36	36	41	41
Weight w/o actuator	ca. kg	4.6	6.5	8.5	12.0	16.0	30.0	36.0	53.0	87.0
*Kvs - Value	m^3/h	4.3	6.7	11.5	22.6	37.1	71.1	104.0	170.0	350.0
*Cv - Value	gal/min	5.0	7.8	13.4	26.3	43.2	82.9	121.3	198.3	408.4
Stroke	mm	10	7	9	11	15	23	23	30	40

Dimensions in mm. Compliance of tightness requirements acc. to EN 1626 for DN150 up to 20 bar differential pressure. In the range of >20-40 bar, 350-700ml per second (1 bar, 20°C [68°F]) are reached. * These figures refer to measurements for the flow direction.

Edition 2022-11

Fire Safe and Offshore Valves

Type 03843 - Actuated Globe Valve

Cryogenic-Globe Valves with Pneumatic Actuator, PN40
“ Fire safe ” type test approval acc. to EN ISO 10497

Stainless steel body and topwork
Actuator - air opens, spring closes or vice versa
" live loaded " gland packing
" cleaned and degreased for oxygen service " - the actuator is not cleaned and degreased for oxygen
Part No. 03843.X.*012
Flanged connection acc. to DIN EN 1092-1 PN40

Available accessories:
· Solenoid valve
· Limit switch
· Electropneumatic positioner etc.
Available options - on request only:
· Actuator - " cleaned and degreased for oxygen service "
· Electric actuator
· Valve with check disc
· Valve with control disc (tapered design)

Applications:
Approved for air gases, vapours and cryogenic liquefied gases incl. LNG.
Working temperature: -255°C / -427°F (18K) up to +120°C / +248°F (393K)

Materials		DIN EN	ASTM
1	Body	1.4409	A 351 CF3M
2	Valve seal	PTFE / Carbon filled (25%)	
3	Disc	1.4404	A 276 Grade 316L
4	Bonnet gasket	Graphite	
5	Headpiece	1.4404	A 276 Grade 316L
6	Bolts	1.4571/A4	similar A 194 B8T
7	Elongation tube	1.4571	A 213 TP 316Ti
8	Stem	1.4404	A 276 Grade 316L
9	Gland packing	Graphite / PTFE / MICA	
10	Gland nut	1.4404	A 276 Grade 316L
11	Pillars	1.4404	A 276 Grade 316L
12	Bush	CW452K	B 159 UNS C51900

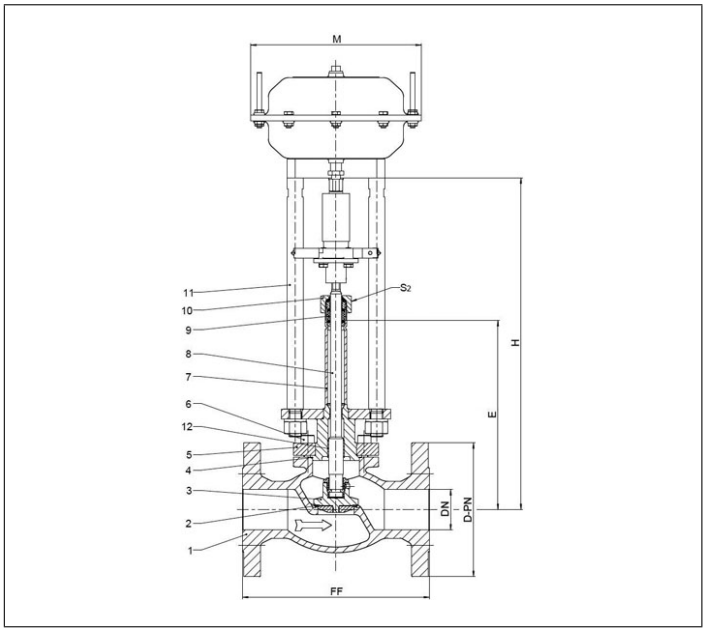

KOREA GAS SAFETY CORPORATION

Type 03843 - Standard design	Technical data									
Nominal size	**DN**	**15**	**20**	**25**	**40**	**50**	**65**	**80**	**100**	**150**
Dimension code - Flange EN 1092-1 PN40	.X.	0150	0200	0250	0400	0500	0650	0800	1000	1500
Flange-Ø	D-PN	95	105	115	150	165	185	200	235	300
Face-to-face dimension	FF	140	150	160	200	230	290	310	350	550
Height	H	370	370	375	420	425	510	575	635	685
Length	E	195	200	200	230	235	300	300	300	350
Actuator-Ø	M	dependent on actuator								
Wrench size across flats	S_2	30	30	30	36	36	36	36	41	41
Weight w/o actuator	ca. kg	4.6	6.5	8.5	12.0	16.0	30.0	36.0	53.0	100.0
*Kvs - Value	m^3/h	4.3	6.7	11.5	22.6	37.1	71.1	104.0	170.0	350.0
*Cv - Value	gal/min	5.0	7.8	13.4	26.3	43.2	82.9	121.3	198.3	408.4
Stroke	mm	10	7	9	11	15	23	23	30	40

Dimensions in mm. Compliance of tightness requirements acc. to EN 1626 for DN150 up to 20 bar differential pressure. In the range of >20-40 bar, 350-700ml per second (1 bar, 20°C [68°F]) are reached. * These figures refer to measurements for the flow direction.

Fire Safe and Offshore Valves

Type 03843 - Actuated Globe Valve

Cryogenic-Globe Valves with Pneumatic Actuator, class 300
“ Fire safe ” type test approval acc. to EN ISO 10497

Stainless steel body and topwork
Actuator - air opens, spring closes or vice versa
" live loaded " gland packing
" cleaned and degreased for oxygen service " - the actuator is not cleaned and degreased for oxygen
Part No. 03843.X.*013
Flanged connection acc. to ANSI B16.5 class 300

Available accessories:
· Solenoid valve
· Limit switch
· Electropneumatic positioner etc.
Available options - on request only:
· Actuator - " cleaned and degreased for oxygen service "
· Electric actuator
· Valve with check disc
· Valve with control disc (tapered design)

Applications:
Approved for air gases, vapours and cryogenic liquefied gases incl. LNG.
Working temperature: -255°C / -427°F (18K) up to +120°C / +248°F (393K)

Materials		DIN EN	ASTM
1	Body	1.4409	A 351 CF3M
2	Valve seal	PTFE / Carbon filled (25%)	
3	Disc	1.4404	A 276 Grade 316L
4	Bonnet gasket	Graphite	
5	Headpiece	1.4404	A 276 Grade 316L
6	Bolts	1.4571/A4	similar A 194 B8T
7	Elongation tube	1.4571	A 213 TP 316Ti
8	Stem	1.4404	A 276 Grade 316L
9	Gland packing	Graphite / PTFE / MICA	
10	Gland nut	1.4404	A 276 Grade 316L
11	Pillars	1.4404	A 276 Grade 316L
12	Bush	CW452K	B 159 UNS C51900

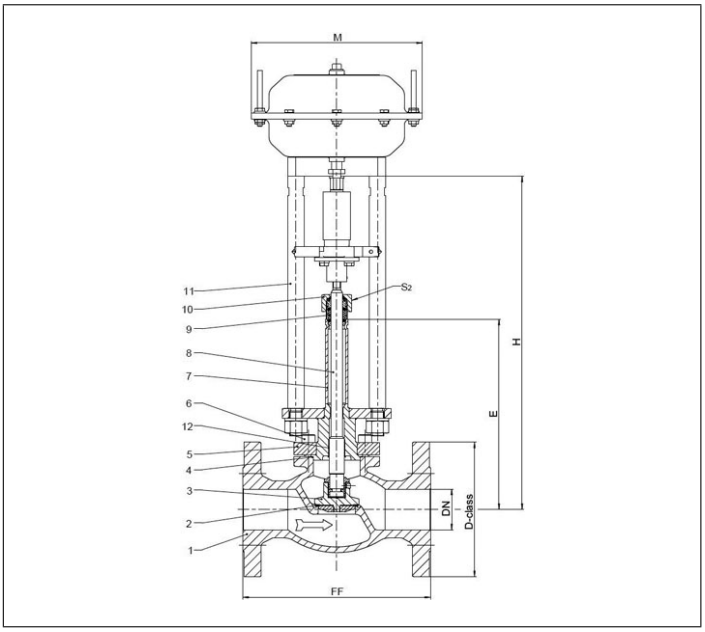

KOREA GAS SAFETY CORPORATION

Type 03843 - Standard design	Technical data									
Nominal size	**DN**	**15**	**20**	**25**	**40**	**50**	**65**	**80**	**100**	**150**
Dimension code - Flange ANSI B16.5 class 300	.X.	0400	0600	1000	1400	2000	2400	3000	4000	6000
Flange-Ø	D-class	95	115	125	155	165	190	210	255	320
Face-to-face dimension	FF	140	150	160	200	230	290	310	350	597
Height	H	370	370	375	420	425	510	575	635	685
Length	E	195	200	200	230	235	300	300	300	300
Actuator-Ø	M	dependent on actuator								
Wrench size across flats	S_2	30	30	30	36	36	36	36	41	41
Weight w/o actuator	ca. kg	4.6	6.5	8.5	12.0	16.0	30.0	36.0	53.0	100.0
*Kvs - Value	m^3/h	4.3	6.7	11.5	22.6	37.1	71.1	104.0	170.0	350.0
*Cv - Value	gal/min	5.0	7.8	13.4	26.3	43.2	82.9	121.3	198.3	408.4
Stroke	mm	10	7	9	11	15	23	23	30	40

Dimensions in mm. Compliance of tightness requirements acc. to EN 1626 for DN150 up to 20 bar differential pressure. In the range of >20-40 bar, 350-700ml per second (1 bar, 20°C [68°F]) are reached. * These figures refer to measurements for the flow direction.

Edition 2022-11

Fire Safe and Offshore Valves

Type 03843 - Actuated Globe Valve

Cryogenic-Globe Valves with Pneumatic Actuator, class 150
“ Fire safe ” type test approval acc. to EN ISO 10497

Stainless steel body and topwork
Actuator - air opens, spring closes or vice versa
" live loaded " gland packing
" cleaned and degreased for oxygen service " - the actuator is not cleaned and degreased for oxygen
Part No. 03843.X.*011
Flanged connection acc. to ANSI B16.5 class 150

Available accessories:
· Solenoid valve
· Limit switch
· Electropneumatic positioner etc.
Available options - on request only:
· Actuator - " cleaned and degreased for oxygen service "
· Electric actuator
· Valve with check disc
· Valve with control disc (tapered design)

Applications:
Approved for air gases, vapours and cryogenic liquefied gases incl. LNG.
Working temperature: -255°C / -427°F (18K) up to +120°C / +248°F (393K)

Materials		DIN EN	ASTM
1	Body	1.4409	A 351 CF3M
2	Valve seal	PTFE / Carbon filled (25%)	
3	Disc	1.4404	A 276 Grade 316L
4	Bonnet gasket	Graphite	
5	Headpiece	1.4404	A 276 Grade 316L
6	Bolts	1.4571/A4	similar A 194 B8T
7	Elongation tube	1.4571	A 213 TP 316Ti
8	Stem	1.4404	A 276 Grade 316L
9	Gland packing	Graphite / PTFE / MICA	
10	Gland nut	1.4404	A 276 Grade 316L
11	Pillars	1.4404	A 276 Grade 316L
12	Bush	CW452K	B 159 UNS C51900

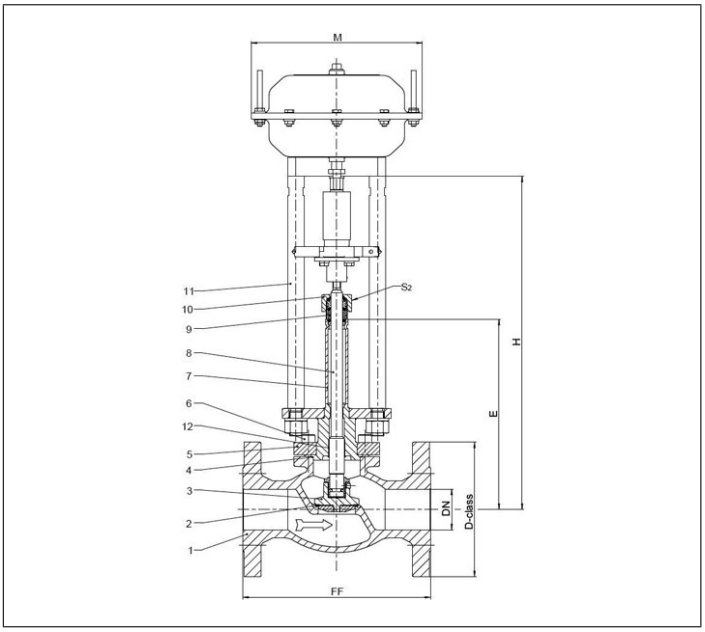

KOREA GAS SAFETY CORPORATION

Type 03843 - Standard design	Technical data									
Nominal size	**DN**	**15**	**20**	**25**	**40**	**50**	**65**	**80**	**100**	**150**
Dimension code - Flange ANSI B16.5 class 150	.X.	0400	0600	1000	1400	2000	2400	3000	4000	6000
Flange-Ø	D-class	90	100	110	125	150	180	190	230	280
Face-to-face dimension	FF	140	150	160	200	230	290	310	350	577
Height	H	370	370	375	420	425	510	575	635	685
Length	E	195	200	200	230	235	300	300	300	300
Actuator-Ø	M	dependent on actuator								
Wrench size across flats	S_2	30	30	30	36	36	36	36	41	41
Weight w/o actuator	ca. kg	4.6	6.5	8.5	12.0	16.0	30.0	36.0	53.0	87.0
*Kvs - Value	m^3/h	4.3	6.7	11.5	22.6	37.1	71.1	104.0	170.0	350.0
*Cv - Value	gal/min	5.0	7.8	13.4	26.3	43.2	82.9	121.3	198.3	408.4
Stroke	mm	10	7	9	11	15	23	23	30	40

Dimensions in mm. Compliance of tightness requirements acc. to EN 1626 for DN150 up to 20 bar differential pressure. In the range of >20-40 bar, 350-700ml per second (1 bar, 20°C [68°F]) are reached. * These figures refer to measurements for the flow direction.

Fire Safe and Offshore Valves

Type 03843 - Actuated Globe Valve

Cryogenic-Globe Valves with Pneumatic Actuator, class 150
“ Fire safe ” type test approval acc. to EN ISO 10497

Stainless steel body and topwork
Actuator - air opens, spring closes or contrary
" live loaded " gland packing

Artikel-Nr. 03843.8000.X
Flanged connection acc. to ANSI B16.5 class 150

In flow direction, the valve with the nominal size DN200 is conform to tightness class L1 up to 18 bar maximum differential pressure acc. to DIN 12567 for LNG use.
This standard can also be used for the tightness class of other cryogenic gases.

Available accessories:
· Solenoid valve
· Limit switch
· Electropneumatic positioner etc.
Available options - on request only:
· Actuator - " cleaned and degreased for oxygen service "
· Electric actuator
· Valve with check or control disc (tapered design)

Applications:
Approved for air gases, vapours and cryogenic liquefied gases incl. LNG.
Working temperature: -196°C / -321°F (77K) up to +120°C / +248°F (393K)

Materials		DIN EN	ASTM
1	Body	1.4409	A 351 CF3M
1a	Flange	1.4404	A 276 Grade 316L
2	Valve seal	PTFE / Carbon filled (25%)	
3	Disc	1.4404	A 276 Grade 316L
4	Bonnet gasket	Graphite	
5	Headpiece	1.4404	A 276 Grade 316L
6	Bolts	1.4571/A4	similar A 194 B8T
7	Elongation tube	1.4571	A 213 TP 316Ti
8	Stem	1.4404	A 276 Grade 316L
9	Gland packing	Graphite / PTFE / MICA	
10	Gland nut	1.4404	A 276 Grade 316L
11	Pillars	1.4404	A 276 Grade 316L
12	Bush	CW452K	B 159 UNS C51900

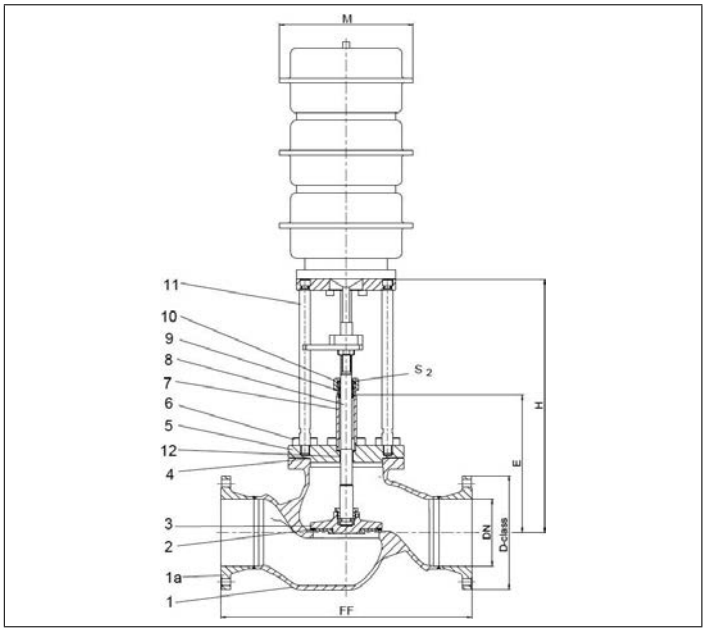

KOREA GAS SAFETY CORPORATION

Type 03843 - Standard design	Technical data	
Nominal size	**DN**	**200**
Dimension code	.X.	8000
Flange-Ø	D-class	345
Face-to-face dimension	FF	760
Height	H	785
Length	E	410
Actuator-Ø	M	dependent on actuator
Wrench size across flats	S_2	30
Weight w/o actuator	ca. kg	135
*Kvs-Value	m^3/h	680
*Cv-Value	gal/min	793
Stroke	mm	60

Dimensions in mm. * These figures refer to measurements for the flow direction.

Edition 2022-11

Fire Safe and Offshore Valves

Type 01853 - Actuated Trailervalve

Cryogenic-Globe Valves with Pneumatic Actuator, PN50 (DN65=PN45)
“ Fire safe ” type test approval acc. to EN ISO 10497

air pressure for operation 6.0 bar g (maximum 10.0 bar g), push-in connection 8mm
Stainless steel body and topwork,
Actuator - air opens, spring closes
“ live loaded ” gland packing
“ cleaned and degreased for oxygen service " - the actuator is not cleaned and degreased for oxygen
maximum working pressure of the valve depending on nominal size

Part No. 01853.X.T0**
* Butt weld connection for stainless steel pipes acc. to ISO 1127 or ASTM A312
Part No. 01853.X.T0*4
Socket weld connection for stainless steel pipes acc. to ISO 1127 or ASTM A312

Available options - on request only:
· Welded stainless steel stubs acc. to ISO 1127 or ASTM A312 - length FF + 200mm
· Weather protection hood

Applications:
Approved for air gases, vapours and cryogenic liquefied gases incl. LNG.
Working temperature: -255°C / -427°F (18K) up to +120°C / +248°F (393K)
Ambient temperature actuator: -50°C / -58°F (223K) up to +70°C / +158°F (343K)

Materials		DIN EN	ASTM
1	Body	1.4409	A 351 CF3M
2	Valve seal	PTFE / Carbon filled (25%)	
3	Disc	1.4404	A 276 Grade 316L
4	Bonnet gasket	Graphite	
5	Headpiece	1.4404	A 276 Grade 316L
6	Bolts	1.4571/A4	similar A 194
7	Elongation tube	1.4571	A 213 TP 316Ti
8	Stem	1.4404	A 276 Grade 316L
9	Spring	1.4571	A 313 Grade 316Ti
10	Flange	1.4404	A 276 Grade 316L
11	Headpiece	1.4404	A 276 Grade 316L
12	Gland packing	Graphite / PTFE / MICA	
13	Gland nut	1.4571	A 313 Grade 316Ti
14	Pillars	1.4404	A 276 Grade 316L
15	Bush	CW452K	B 159 UNS C51900
16	Actuator	Rubber	

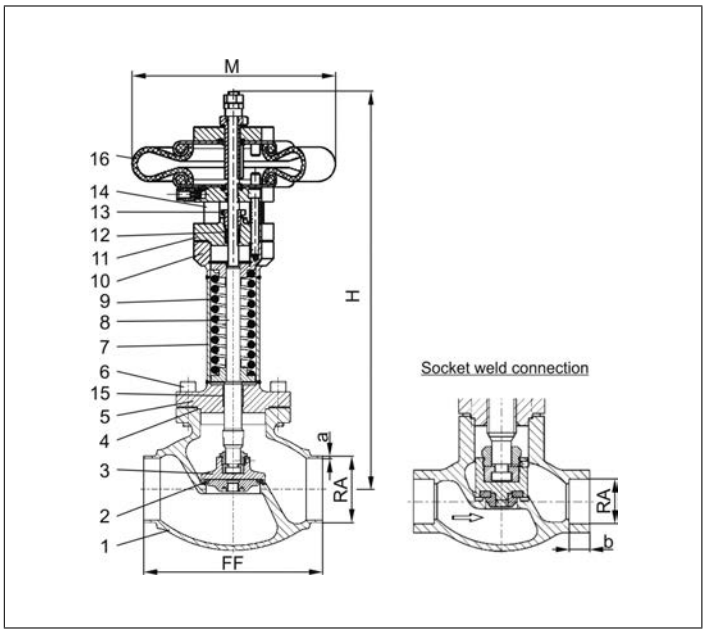

Type 01853 - Standard design	Technical data								
Nominal size	**DN**	**20**	**20**	**25**	**40**	**40**	**50**	**65**	**80**
Dimension code	.X.	2021	2026	2533	4042	4048	5060	657x	8088
Face-to-face dimension	FF	100	100	115	130	130	155	205	245
Height	H	443	443	444	441	441	420	448	467
Outside pipe-Ø ISO 1127	RA	21.3	26.9	33.7	42.4	48.3	60.3	76.1	88.9
Wall thickness pipe ISO 1127	a	2.0	2.0	2.0	2.0	2.0	2.0	2.9	3.2
Outside pipe-Ø ASTM A312	RA	21.34	26.67	33.40	42.16	48.26	60.33	73.03	88.90
Wall thickness pipe ASTM A312	a	dimensions acc. to S10 or S40							
Socket depth	b	10	10	13	13	13	16	16	16
Actuator-Ø	M	229	229	229	229	229	229	229	229
Weight	ca. kg	7.2	7.2	9.1	10.5	10.5	14.5	17.4	22.5
*Kvs-Value	m^3/h	4.3	4.3	11.5	22.6	22.6	37.1	71.1	104.0
*Cv-Value	gal/min	5.0	5.0	13.4	23.9	26.3	43.2	82.9	121.3
Stroke	mm	10	10	14	14	14	14	22	25
Δ P max	bar	50	50	50	16	16	10	3	4
Δ P max with special spring	bar	-	-	-	31	31	18	10	-

Dimensions in mm. * These figures refer to measurements for the flow direction.

Spare Parts for Fire Safe and Offshore Applications

Type 28651 - Topwork

for Cryogenic-Globe and Globe/Check Valves
" Fire safe " type test approval acc. to EN ISO 10497

Stainless steel topwork,
" live loaded " gland packing
" cleaned and degreased for oxygen service "

Part No. 28651.X.0000
Part No. 28651.X.5000 with check function

suitable for:

Type	Nominal size
01651	DN10 - DN100
01655	DN10 - DN50
03651	DN25 - DN150

Materials		DIN EN	ASTM
1	Valve seal	PTFE / Carbon filled (25%)	
2	Disc	1.4301	A 276 Grade 304
3	Bonnet gasket	Graphite	
4	Headpiece	1.4301 / 1.4308	A 276 Grade 304 / A 351 CF8
5	Bolts	1.4301/A2	A 194 B8
6	Stem	1.4301	A 276 Grade 304
7	Gland packing	Graphite / PTFE / MICA	
8	Gland nut	1.4305	A 276 Grade 303
9	Handwheel	1.4409	A 351 CF3M
10	Spring	1.4310	A 313 Grade 301
11	Bush	CW452K	B 159 UNS C51900

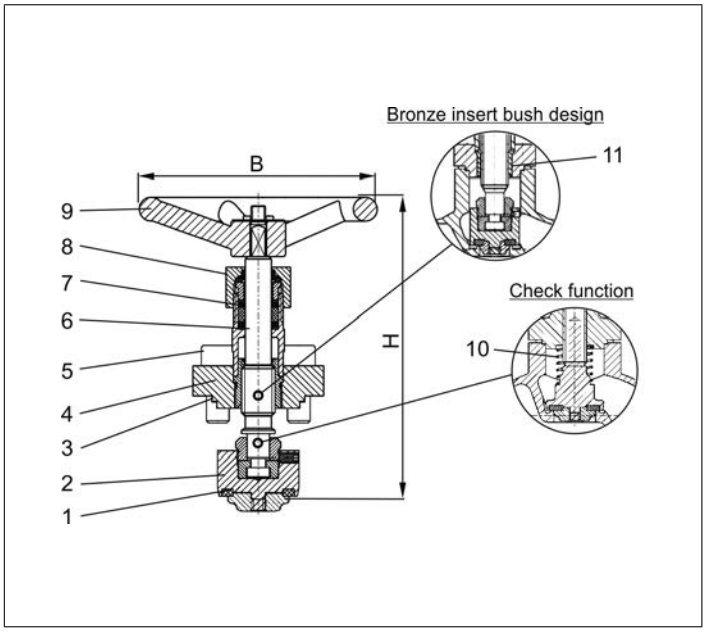

Type 28651	Technical data											
Nominal size	**DN**	**10**	**15**	**20**	**25**	**32**	**40**	**50**	**65**	**80**	**100**	**150**
Dimension code	.X.	0100	0150	0200	0250	0320	0400	0500	0650	0800	1000	1500
Height	H	130	130	130	130	155	160	185	240	285	320	380
Nimber of bolts		4	4	4	4	4	4	6	6	6	6	12
Handwheel-Ø	B	100	100	100	100	125	125	125	200	250	315	360
Weight	ca. kg	0.6	0.7	0.95	1.0	1.5	1.9	2.7	4.8	5.9	8.4	18.0

Dimensions in mm.

Edition 2022-11

Spare Parts for Fire Safe and Offshore Applications

Type 28641 - Topwork

for Cryogenic-Globe and Globe/Check Valves
" Fire safe " type test approval acc. to EN ISO 10497

Stainless steel topwork,
" live loaded " gland packing
" cleaned and degreased for oxygen service "

Part No. 28641.X.0010 (H=270mm)
Part No. 28641.X.0020 (H=370mm)

Part No. 28641.X.5010 (H=270mm) with check function
Part No. 28641.X.5020 (H=370mm) with check function

suitable for:

Type	Nominal size
01641	DN10 - DN150
01645	DN10 - DN50
03641	DN25 - DN150

Materials		DIN EN	ASTM
1	Valve seal	PTFE / Carbon filled (25%)	
2	Disc	1.4301	A 276 Grade 304
3	Bonnet gasket	Graphite	
4	Headpiece	1.4301 / 1.4308	A 276 Grade 304 / A 351 CF8
5	Bolts	1.4301/A2	A 194 B8
6	Elongation tube	1.4541	A 213 TP 321
7	Stem	1.4301	A 276 Grade 304
8	Gland packing	Graphite / PTFE / MICA	
9	Gland nut	1.4305	A 276 Grade 303
10	Handwheel	1.4409	A 351 CF3M
11	Spring	1.4310	A 313 Grade 301
12	Bush	CW452K	B 159 UNS C51900

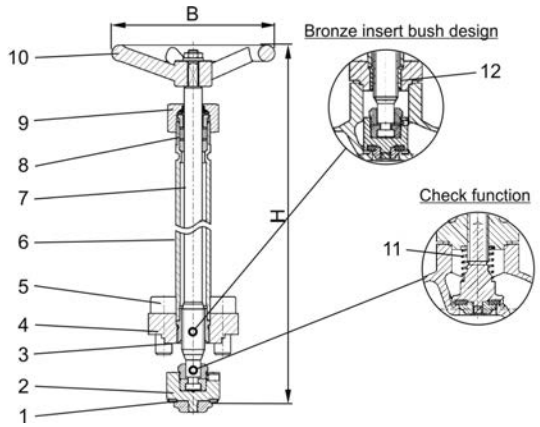

Type 28641	Technical data											
Nominal size	**DN**	**10**	**15**	**20**	**25**	**32**	**40**	**50**	**65**	**80**	**100**	**150**
Dimension code	.X.	0100	0150	0200	0250	0320	0400	0500	0650	0800	1000	1500
Height	H	270 mm or 370mm							370	370	370	420
Number of bolts		4	4	4	4	4	4	6	6	6	6	6
Handwheel-Ø	B	100	100	100	100	125	125	125	200	250	315	350
Weight	ca. kg	1.0	1.1	1.4	1.4	2.0	2.4	3.0	5.5	6.8	9.5	18.4

Dimensions in mm.

Spare Parts for Fire Safe and Offshore Applications

Type 28751 - Topwork

for Cryogenic-Globe and Globe/Check Valves

Stainless steel topwork,
“ live loaded ” gland packing
“ cleaned and degreased for oxygen service "

Part No. 28751.X.0000
Part No. 28751.X.5000 with check function

suitable for:

Type	Nominal size
01751	DN10 - DN100
01755	DN10 - DN50
03751	DN25 - DN150

Materials		DIN EN	ASTM
1	Valve seal	PCTFE (Kel-F)	
2	Disc	1.4401	A 276 Grade 316
3	Bonnet gasket	Graphite	
4	Headpiece	1.4404	A 276 Grade 316L
5	Bolts	1.4571/A4	similar A 194 B8T
6	Stem	1.4401	A 276 Grade 316
7	Gland packing	Graphite / PTFE / MICA	
8	Gland nut	1.4404	A 276 Grade 316L
9	Handwheel	1.4409	A 351 CF3M
10	Spring	1.4571	A 313 Grade 316Ti
11	Bush	CW452K	B 159 UNS C51900

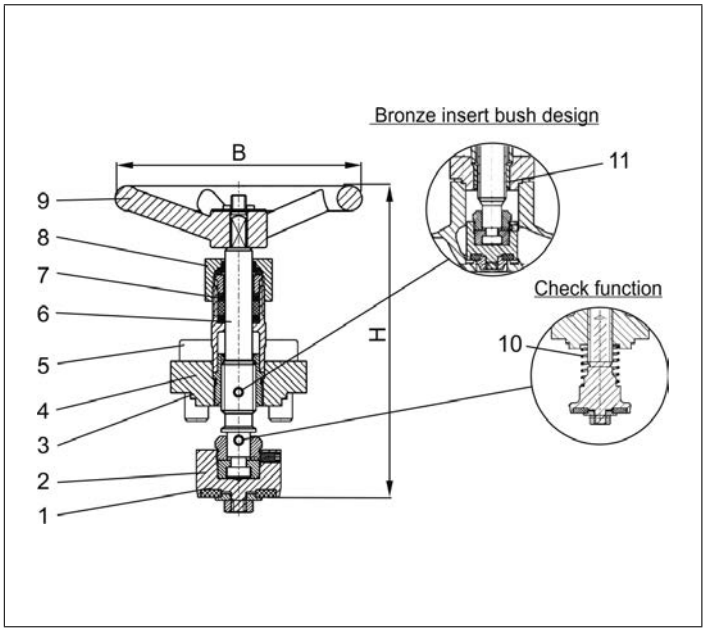

Type 28751	Technical data											
Nominal size	**DN**	**10**	**15**	**20**	**25**	**32**	**40**	**50**	**65**	**80**	**100**	**150**
Dimension code	.X.	0100	0150	0200	0250	0320	0400	0500	0650	0800	1000	1500
Height	H	130	130	130	130	155	160	185	240	285	320	380
Number of bolts		4	4	4	4	4	4	6	6	6	6	12
Handwheel-Ø	B	100	100	100	100	125	125	125	200	250	315	360
Weight	ca. kg	0.6	0.7	0.95	1.0	1.5	1.9	2.7	4.8	5.9	8.4	18.0

Dimensions in mm.

Edition 2022-11

Spare Parts for Fire Safe and Offshore Applications

Type 28741 - Topwork

for Cryogenic-Globe and Globe/Check Valves

Stainless steel topwork,
“ live loaded ” gland packing
“ cleaned and degreased for oxygen service "

Part No. 28741.X.0010 (H=270mm)
Part No. 28741.X.0020 (H=370mm)

Part No. 28741.X.5010 (H=270mm) with check function
Part No. 28741.X.5020 (H=370mm) with check function

suitable for:

Type	Nominal size
01741	DN10 - DN150
01745	DN10 - DN50
03741	DN25 - DN150

Materials		DIN EN	ASTM
1	Valve seal	PCTFE (Kel-F)	
2	Disc	1.4401	A 276 Grade 316
3	Bonnet gasket	Graphite	
4	Headpiece	1.4404	A 276 Grade 316L
5	Bolts	1.4571/A4	similar A 194 B8T
6	Elongation tube	1.4571	A 213 TP 316Ti
7	Stem	1.4401	A 276 Grade 316
8	Gland packing	Graphite / PTFE / MICA	
9	Gland nut	1.4404	A 276 Grade 316L
10	Handwheel	1.4409	A 351 CF3M
11	Spring	1.4571	A 313 Grade 316Ti
12	Bush	CW452K	B 159 UNS C51900

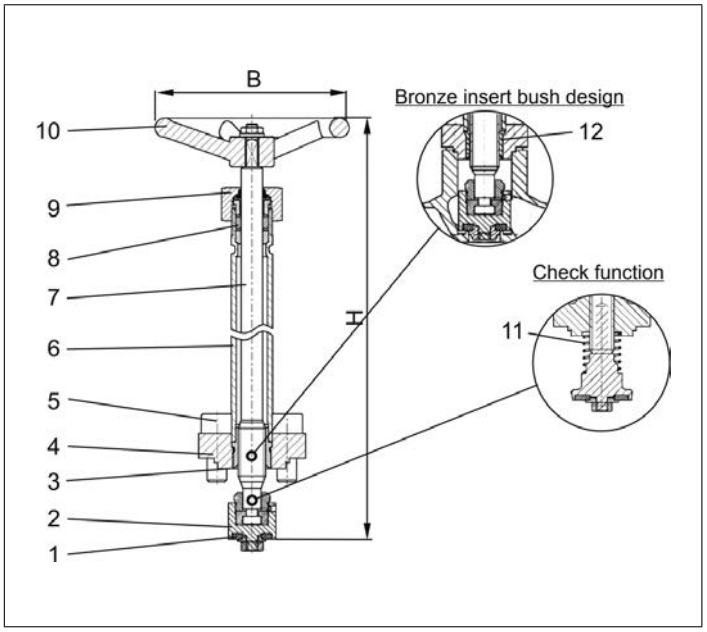

Type 28741	Technical data											
Nominal size	**DN**	**10**	**15**	**20**	**25**	**32**	**40**	**50**	**65**	**80**	**100**	**150**
Dimension code	.X.	0100	0150	0200	0250	0320	0400	0500	0650	0800	1000	1500
Height	H	270mm or 370mm							370	370	370	420
Number of bolts		4	4	4	4	4	4	6	6	6	6	12
Handwheel-Ø	B	100	100	100	100	125	125	125	200	250	315	360
Weight	ca. kg	1.0	1.1	1.4	1.4	2.0	2.4	3.0	5.5	6.8	9.5	19.0

Dimensions in mm.

Spare Parts for Fire Safe and Offshore Applications

Type 28851 - Topwork

for Cryogenic-Globe and Globe/Check Valves
“ Fire safe ” type test approval acc. to EN ISO 10497

Stainless steel topwork,
“ live loaded ” gland packing
“ cleaned and degreased for oxygen service "

Part No. 28851.X.0000
Part No. 28851.X.5000 with check function

suitable for:

Type	Nominal size
01851	DN10 - DN100
01855	DN10 - DN50
03851	DN25 - DN150

Materials		DIN EN	ASTM
1	Valve seal	PTFE / Carbon filled (25%)	
2	Disc	1.4401	A 276 Grade 316
3	Bonnet gasket	Graphite	
4	Headpiece	1.4404	A 276 Grade 316L
5	Bolts	1.4571/A4	similar A 194 B8T
6	Stem	1.4401	A 276 Grade 316
7	Gland packing	Graphite / PTFE / MICA	
8	Gland nut	1.4404	A 276 Grade 316L
9	Handwheel	1.4409	A 351 CF3M
10	Spring	1.4571	A 313 Grade 316Ti
11	Bush	CW452K	B 159 UNS C51900

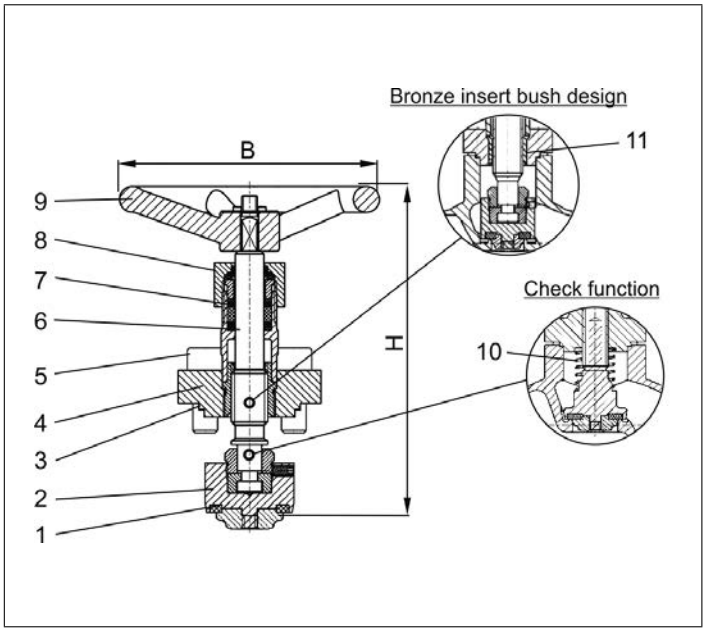

Type 28851	Technical data											
Nominal size	**DN**	**10**	**15**	**20**	**25**	**32**	**40**	**50**	**65**	**80**	**100**	**150**
Dimension code	.X.	0100	0150	0200	0250	0320	0400	0500	0650	0800	1000	1500
Height	H	130	130	130	130	155	160	185	240	285	320	380
Number of bolts		4	4	4	4	4	4	6	6	6	6	12
Handwheel-Ø	B	100	100	100	100	125	125	125	200	250	315	360
Weight	ca. kg	0.6	0.7	0.95	1.0	1.5	1.9	2.7	4.8	5.9	8.4	18.0

Dimensions in mm.

Edition 2022-11

Spare Parts for Fire Safe and Offshore Applications

Type 28841 - Topwork

for Cryogenic-Globe and Globe/Check Valves
“ Fire safe ” type test approval acc. to EN ISO 10497

Stainless steel topwork,
“ live loaded ” gland packing
“ cleaned and degreased for oxygen service "

Part No. 28841.X.0010 (H=270mm)
Part No. 28841.X.0020 (H=370mm)

Part No. 28841.X.5010 (H=270mm) with check function
Part No. 28841.X.5020 (H=370mm) with check function

suitable for:

Type	Nominal size
01841	DN10 - DN100
01845	DN10 - DN50
03841	DN25 - DN150

Materials		DIN EN	ASTM
1	Valve seal	PTFE / Carbon filled (25%)	
2	Disc	1.4401	A 276 Grade 316
3	Bonnet gasket	Graphite	
4	Headpiece	1.4404	A 276 Grade 316L
5	Bolts	1.4571/A4	similar A 194 B8T
6	Elongation tube	1.4571	A 213 TP 316Ti
7	Stem	1.4401	A 276 Grade 316
8	Gland packing	Graphite / PTFE / MICA	
9	Gland nut	1.4404	A 276 Grade 316L
10	Handwheel	1.4409	A 351 CF3M
11	Spring	1.4571	A 313 Grade 316Ti
12	Bush	CW452K	B 159 UNS C51900

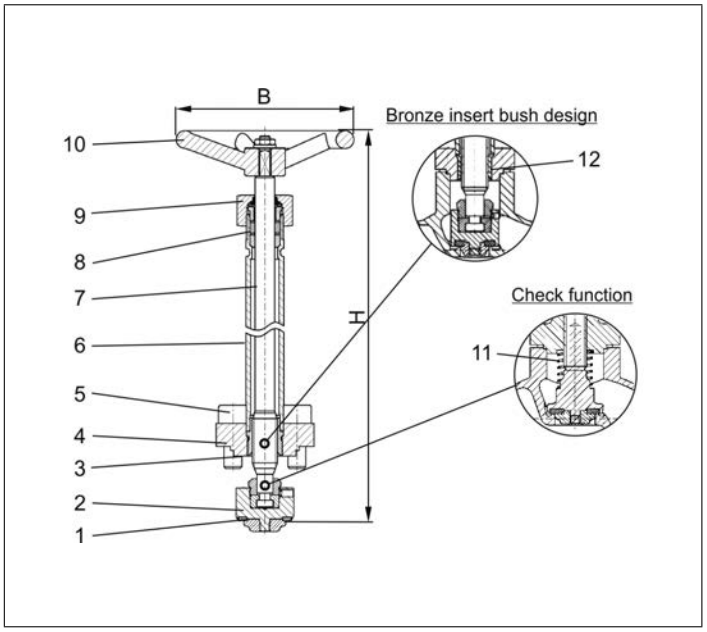

Type 28841	Technical data											
Nominal size	**DN**	**10**	**15**	**20**	**25**	**32**	**40**	**50**	**65**	**80**	**100**	**150**
Dimension code	.X.	0100	0150	0200	0250	0320	0400	0500	0650	0800	1000	1500
Height	H	270mm or 370mm							370	370	370	420
Number of bolts		4	4	4	4	4	4	6	6	6	6	12
Handwheel-Ø	B	100	100	100	100	125	125	125	200	250	315	360
Weight	ca. kg	1.0	1.1	1.4	1.4	2.0	2.4	3.0	5.5	6.8	9.5	19.0

Dimensions in mm.

Spare Parts for Fire Safe and Offshore Applications

Type 28203, Type 29203 - Disc complete

for Cryogenic-Globe Valves
stainless steel disc 1.4404
" cleaned and degreased for oxygen service "

Part No. 28203.X.0783

suitable for:

Type	Nominal size
01751	DN10 - DN100
01741, 01743	DN10 - DN200
01755, 01745	DN10 - DN50
03751	DN15 - DN150
03741, 03743	DN15 - DN200

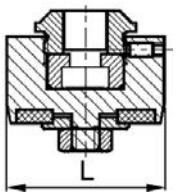

Type 28203.X.0783	Technical data												
Nominal size	**DN**	**10**	**15**	**20**	**25**	**32**	**40**	**50**	**65**	**80**	**100**	**150**	**200**
Dimension code	.X.	0100	0150	0200	0250	0320	0400	0500	0650	0800	1000	1500	2000
Disc Ø	L	23	25	30	34.5	42	47	55	73	86	104	155	217
Weight	ca. kg	0.05	0.06	0.09	0.12	0.18	0.22	0.30	0.55	0.75	1.05	3.10	9.28

Dimensions in mm.

for Cryogenic-Globe Valves
stainless steel disc 1.4301
" cleaned and degreased for oxygen service "

Part No. 29203.X.0765

suitable for:

Type	Nominal size
01651	DN10 - DN100
01641, 01643	DN10 - DN200
01655, 01645	DN10 - DN50
03651	DN15 - DN150
03641, 03643	DN15 - DN200

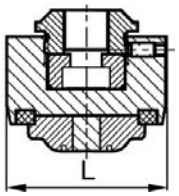

Type 29203.X.0765	Technical data												
Nominal size	**DN**	**10**	**15**	**20**	**25**	**32**	**40**	**50**	**65**	**80**	**100**	**150**	**200**
Dimension code	.X.	0100	0150	0200	0250	0320	0400	0500	0650	0800	1000	1500	2000
Disc Ø	L	23	25	30	34.5	42	47	55	73	86	104	155	217
Weight	ca. kg	0.05	0.06	0.09	0.12	0.18	0.22	0.30	0.55	0.75	1.05	3.10	9.28

Dimensions in mm.

for Cryogenic-Globe Valves
stainless steel disc 1.4404
" cleaned and degreased for oxygen service "

Part No. 29203.X.0783

suitable for:

Type	Nominal size
01851	DN10 - DN100
01841, 01843	DN10 - DN200
01855, 01845	DN10 - DN50
03851	DN15 - DN150
03841, 03843	DN15 - DN200

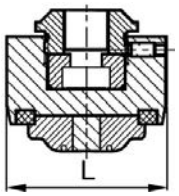

Type 29203.X.0783	Technical data												
Nominal size	**DN**	**10**	**15**	**20**	**25**	**32**	**40**	**50**	**65**	**80**	**100**	**150**	**200**
Dimension code	.X.	0100	0150	0200	0250	0320	0400	0500	0650	0800	1000	1500	2000
Disc Ø	L	23	25	30	34.5	42	47	55	73	86	104	155	217
Weight	ca. kg	0.05	0.06	0.09	0.12	0.18	0.22	0.30	0.55	0.75	1.05	3.10	9.28

Dimensions in mm.

Spare Parts for Fire Safe and Offshore Applications

Type 28205, Type 29205 - Check Disc complete

for Cryogenic-Globe/Check Valves
stainless steel check disc 1.4301
" cleaned and degreased for oxygen service "

Part No. 29205.X.5765

suitable for:

Type	Nominal size
01651	DN10 - DN100
01641, 01643	DN10 - DN150
01655, 01645	DN10 - DN50
03651, 03641, 03643	DN15 - DN150

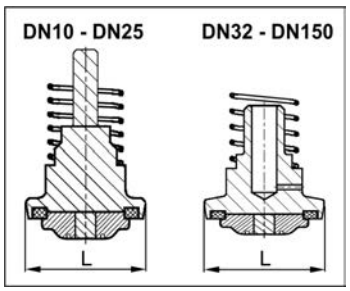

Type29205.X.5765	Technical data											
Nominal size	**DN**	**10**	**15**	**20**	**25**	**32**	**40**	**50**	**65**	**80**	**100**	**150**
Dimension code	.X.	0100	0150	0200	0250	0320	0400	0500	0650	0800	1000	1500
Disc Ø	L	23	25	30	34.5	42	47	55	73	86	104	155
Weight	ca. kg	0.05	0.07	0.09	0.10	0.15	0.20	0.34	0.48	0.66	1.05	3.28

Dimensions in mm.

for Cryogenic-Globe/Check Valves
stainless steel check disc 1.4404
" cleaned and degreased for oxygen service "

Part No. 29205.X.5783

suitable for:

Type	Nominal size
01851	DN10 - DN100
01841, 01843	DN10 - DN150
01855, 01845	DN10 - DN50
03851, 03841, 03843	DN15 - DN150

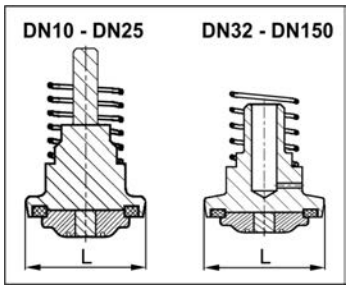

Type 29205.X.5783	Technical data											
Nominal size	**DN**	**10**	**15**	**20**	**25**	**32**	**40**	**50**	**65**	**80**	**100**	**150**
Dimension code	.X.	0100	0150	0200	0250	0320	0400	0500	0650	0800	1000	1500
Disc Ø	L	23	25	30	34.5	42	47	55	73	86	104	155
Weight	ca. kg	0.05	0.07	0.09	0.10	0.15	0.20	0.34	0.48	0.66	1.05	3.28

Dimensions in mm.

for Cryogenic-Globe/Check Valves
stainless steel check disc 1.4404
" cleaned and degreased for oxygen service "

Part No. 28205.X.5783

suitable for:

Type	Nominal size
01751	DN10 - DN100
01741, 01743	DN10 - DN150
01755, 01745	DN10 - DN50
03751, 03741, 03743	DN15 - DN150

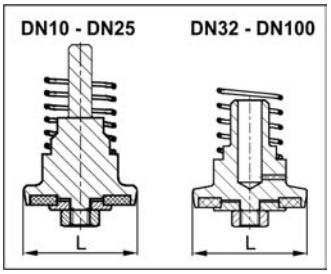

Type 28205.X.5783	Technical data											
Nominal size	**DN**	**10**	**15**	**20**	**25**	**32**	**40**	**50**	**65**	**80**	**100**	**150**
Dimension code	.X.	0100	0150	0200	0250	0320	0400	0500	0650	0800	1000	1500
Disc Ø	L	23	25	30	34.5	42	47	55	73	86	104	155
Weight	ca. kg	0.05	0.07	0.09	0.10	0.15	0.20	0.34	0.48	0.66	1.05	3.28

Dimensions in mm.

Spare Parts for Fire Safe and Offshore Applications

Type 28206, Type 29206 - Check Disc complete

for Cryogenic-Check Valves
stainless steel check disc 1.4404
" cleaned and degreased for oxygen service "

Part No. 28206.X.0783

suitable for:

Type	Nominal size
05714	DN10 - DN150
05717	DN10 - DN50
05719	DN15 - DN150

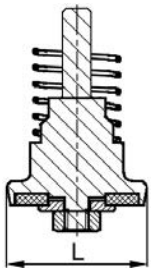

Type 28206.X.0783	Technical data											
Nominal size	**DN**	**10**	**15**	**20**	**25**	**32**	**40**	**50**	**65**	**80**	**100**	**150**
Dimension code	.X.	0100	0150	0200	0250	0320	0400	0500	0650	0800	1000	1500
Disc Ø	L	23	25	30	34.5	42	47	55	73	86	104	155
Weight	ca. kg	0.05	0.07	0.09	0.10	0.15	0.20	0.34	0.48	0.66	1.05	3.25

Dimensions in mm.

for Cryogenic-Check Valves
stainless steel check disc 1.4301
" cleaned and degreased for oxygen service "

Part No. 29206.X.0765

suitable for:

Type	Nominal size
05614	DN10 - DN150

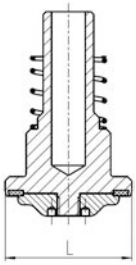

Type 29206.X.0765	Technical data											
Nominal size	**DN**	**10**	**15**	**20**	**25**	**32**	**40**	**50**	**65**	**80**	**100**	**150**
Dimension code	.X.	0100	0150	0200	0250	0320	0400	0500	0650	0800	1000	1500
Disc Ø	L	23	25	30	34.5	42	47	55	73	86	104	155
Weight	ca. kg	0.05	0.07	0.09	0.10	0.15	0.20	0.34	0.48	0.66	1.05	3.25

Dimensions in mm.

Spare Parts for Fire Safe and Offshore Applications

Type 30641, 30643 - Sealing spare part kit

for Cryogenic-Globe Valves

" cleaned and degreased for oxygen service "

consisting of:
· 1x Bonnet gasket Graphite
· 1x Gland packing kit complete PTFE/Graphite
· 2x Stem gasket Mica

Part No. 30641.X.0000
Part No. 30643.X.0000

30641.X.0000 suitable for:

Type	Nominal size
01651, 01851	DN10 - DN150
01641, 01841	DN10 - DN200
01655, 01645, 01855, 01845	DN10 - DN50
03651, 03641, 03851, 03841	DN15 - DN150
01643, 01843	DN10 - DN50, DN100, DN200
03643, 03843	DN15 - DN50, DN100, DN200

30643.X.0000 suitable for:

Type	Nominal size
01643, 01843, 03643, 03843	DN65 - DN80, DN150

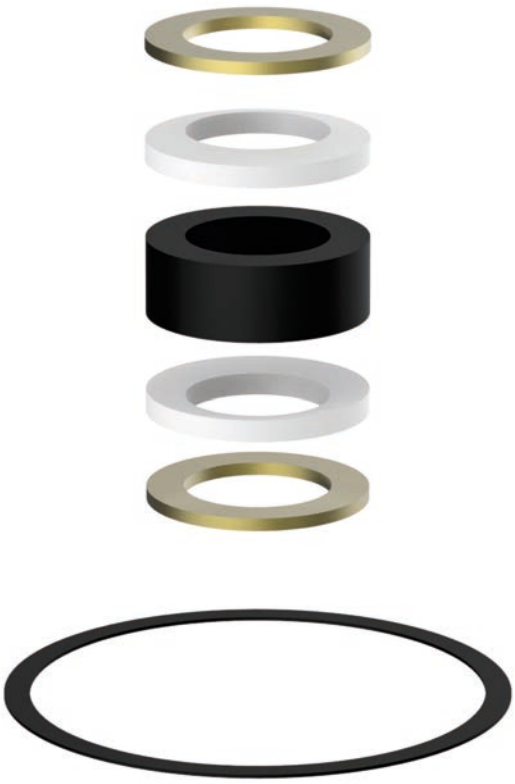

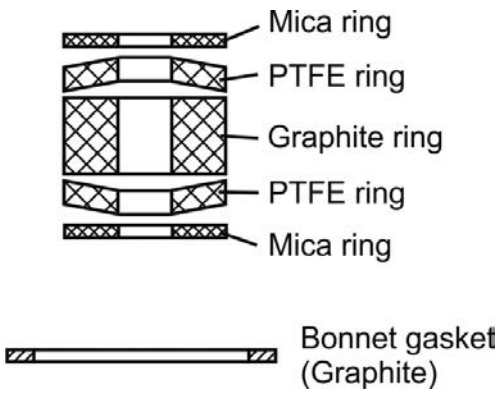

Type 30641/30643	Technical data												
Nominal size	**DN**	**10**	**15**	**20**	**25**	**32**	**40**	**50**	**65**	**80**	**100**	**150**	**200**
Dimension code	.X.	0100	0150	0200	0250	0320	0400	0500	0650	0800	1000	1500	2000
Weight	ca. kg	0.04	0.04	0.05	0.06	0.08	0.09	0.14	0.19	0.25	0.34	0.39	1.81

Dimensions in mm.

Spare Parts for Fire Safe and Offshore Applications

Type 30653 - Sealing spare part kit

for Cryogenic-Globe Valves

" cleaned and degreased for oxygen service "

consisting of:
· 1x Bonnet gasket Graphite
· 1x Gland packing kit complete PTFE/Graphite
· 2x Stem gasket Mica

Part No. 30653.X.0000

suitable for:

Type	Nominal size
01653, 01753, 01853, 03653, 03753, 03853	DN15 - DN80

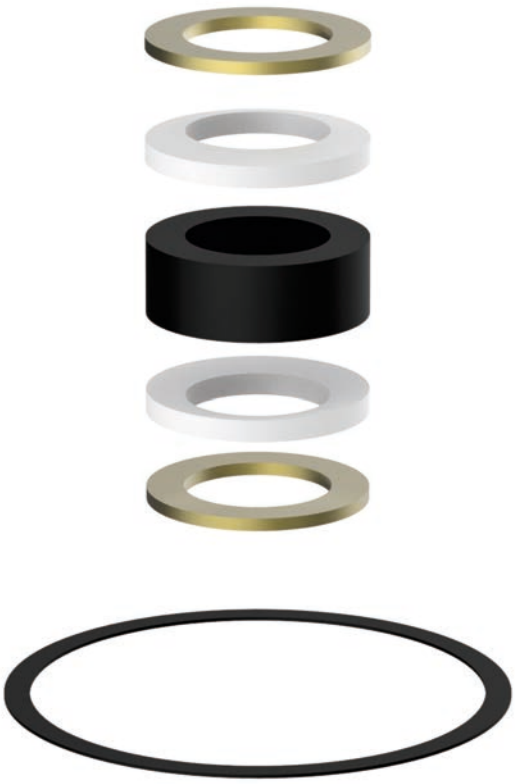

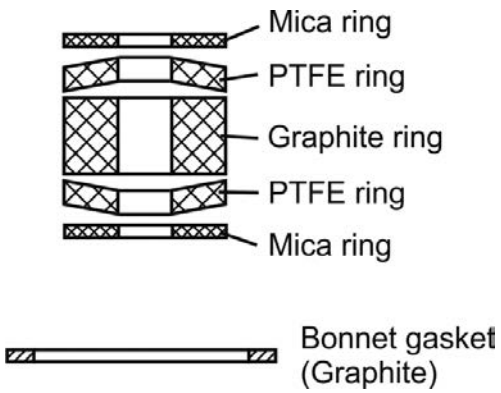

Type 30653	Technical data								
Nominal size	**DN**	**15**	**20**	**25**	**32**	**40**	**50**	**65**	**80**
Dimension code	.X.	0150	0200	0250	0320	0400	0500	0650	0800
Weight	ca. kg	0.04	0.05	0.06	0.08	0.09	0.14	0.19	0.25

Dimensions in mm.

Edition 2022-11

Spare Parts for Fire Safe and Offshore Applications

Type 30741, 30743 - Sealing spare part kit

for Cryogenic-Globe Valves

" cleaned and degreased for oxygen service "

consisting of:
· 1x Bonnet gasket Graphite
· 1x Disc seal PCTFE
· 1x Disc nut 1.4571
· 1x Gland packing kit complete PTFE/Graphite
· 2x Stem gasket Mica

Part No. 30741.X.0000
Part No. 30743.X.0000

30741.X.0000 suitable for:

Type	Nominal size
01751	DN10 - DN150
01741	DN10 - DN200
01755, 01745	DN10 - DN50
03751, 03741	DN15 - DN150
01743, 03743	DN10 - DN50, DN100, DN200

30743.X.0000 suitable for:

Type	Nominal size
01743, 03743	DN65 - DN80, DN150

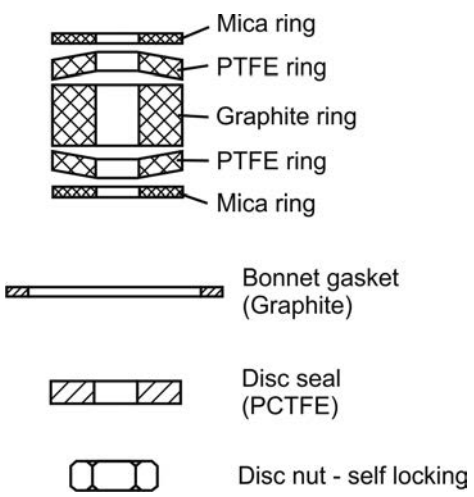

Type 30741/30743	Technical data												
Nominal size	**DN**	**10**	**15**	**20**	**25**	**32**	**40**	**50**	**65**	**80**	**100**	**150**	**200**
Dimension code	.X.	0100	0150	0200	0250	0320	0400	0500	0650	0800	1000	1500	2000
Weight	ca. kg	0.03	0.03	0.04	0.05	0.07	0.08	0.13	0.18	0.24	0.32	0.44	1.81

Dimensions in mm.

Spare Parts for Fire Safe and Offshore Applications

Type 30714 - Sealing spare part kit

for Cryogenic-Check Valves

" cleaned and degreased for oxygen service "

consisting of:
· 1x Bonnet gasket Graphite
· 1x Disc seal PTFE / Carbon filled (25%)
· 1x Disc nut 1.4571

Part No. 30714.X.0000

suitable for:

Type	Nominal size
05714	DN10 - DN150
05717	DN10 - DN50
05719	DN15 - DN150

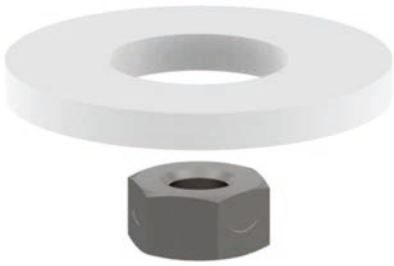

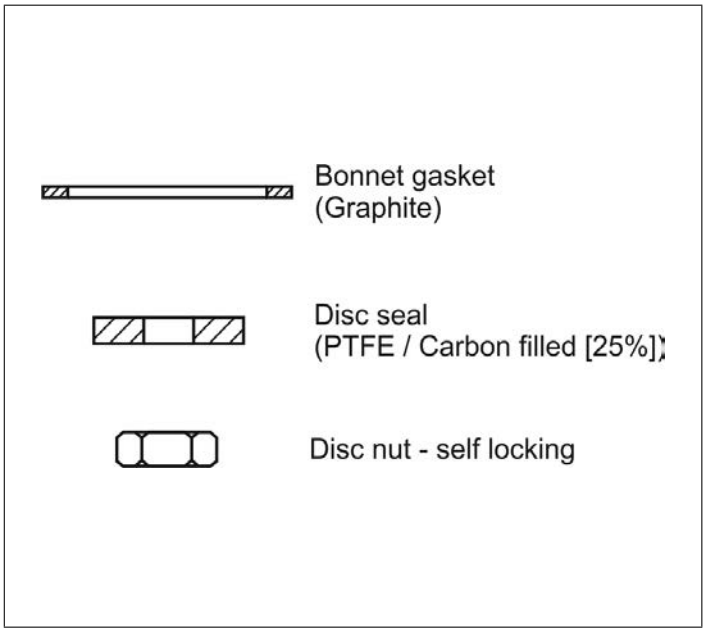

Type 30714	Technical data										
Nominal size	**DN**	**10**	**15**	**20**	**25**	**32**	**40**	**50**	**65**	**80**	**100**
Dimension code	.X.	0100	0150	0200	0250	0320	0400	0500	0650	0800	1000
Weight	ca. kg	0.02	0.02	0.03	0.04	0.06	0.07	0.11	0.16	0.22	0.30

Dimensions in mm.

Edition 2022-11

Material comparison DIN EN, DIN and ASTM Standard

HEROSE

Nonferrous materials

DIN EN new		DIN old		ASTM
CC490K	CuSn3Zn8Pb5-C	RG2	2.1098	-
CC491K	CuSn5Zn5Pb5-C	RG5	2.1096.01	B 62 UNS C83600
CC493K	CuSn7Zn4Pb7-C	RG7	2.1090	B 505 UNS C93200
CW450K	CuSn4	CUSN4	2.1016	B 103 UNS C51100
CW452K	CuSn6	CUSN6	2.1020	B 159 UNS C51900
CW453K	CuSn8	CUSN8	2.1030	B 103 UNS C52100
CW507L	CuZn36	CUZN36	2.0335	B 111 UNS C27000
CW508L	CuZn37	CUZN37	2.0321	B 111 UNS C27200
CW509L	CuZn40	CUZN40	2.0360	B 111 UNS C28000
CW610N	CuZn39Pb0,5	CUZN39PB	2.0372	B 111 UNS C36500
CW612N	CuZn39Pb2	MS58	2.0380.10	B 283 UNS C37770
CW614N	CuZn39Pb3	MS58	2.0401.08	B 283 UNS C38500
CW617N	CuZn40Pb2	MS58	2.0402.20	B 283 UNS C38000
CW710R	CuZn35Ni3Mn2AlPb	CUZN35NI	2.0540	-
CW713R	CuZn37Mn3Al2PbSi	CUZN40AL	2.0552	-
CW718R	CuZn39Mn1AlPbSi	CUZN40AL	2.0561	-
CW720R	CuZn40Mn1Pb1	CUZN40MN	2.0580	-
CW723R	CuZn40Mn2Fe1	CUZN40MN	2.0572	-

Ferrous materials

DIN EN new		DIN old	ASTM
1.1200	Spring steel	Carbon steel	A 227
1.4021	C20Cr13	1.4021	A 276 Grade 420
1.4034	X45Cr13	1.4034	A 276 Grade 420
1.4057	X17CrNi16-2	1.4057	A 276 Grade 431
1.4104	X14CrMoS17	1.4104	A 276 Grade 430F
1.4112	X90CrMoV18	1.4112	A 276 Grade 440B
1.4122	X39CrMo17-1	1.4122	-
1.4300	X12CrNi18-8	1.4300	A 276 Grade 302
1.4301	X5CrNi18-10	1.4301	A 276 Grade 304
1.4305	X8CrNiS18-9	1.4305	A 276 Grade 303
1.4306	X2CrNi19-11	1.4306	A 312 TP 304L
1.4308	G-X6CrNi18-9	1.4308	A 351 CF8
1.4310	X10CrNi18-8	1.4310	A 313 Grade 301
1.4401	X5CrNiMo17-12-2	1.4401	A 276 Grade 316
1.4404	X2CrNiMo17-12-2	1.4404	A 276 Grade 316L
1.4408	GX5CrNiMo19-11-2	1.4408	A 351 CF 8M
1.4409	G-X2NiCrMo28-20-2	1.4409	A 351 CF 3M
1.4541	X6CrNiTi18-10	1.4541	A 276 Grade 321
1.4568	X7CrNiAl17-7	1.4568	A 313 Grade 631
1.4571	X6CrNiMoTi17-12-2	1.4571	A 313 Grade 316Ti
1.4552	G-X7CrNiNb18-9	1.4552	A 351 CF 8C
1.4923	X22CrMoV12-1	1.4923	A 193 Grade B6
1.4980	X5CrNiTi26-15	1.4980	A 286 Grade 660
1.5415	16Mo3	-	A 182 Grade F1
1.7225	42CrMo4	1.7225	A 194 Grade 7
1.7258	24CrMo5	1.7258	A 194 Grade B7
1.7335	13CrMo4-5	1.7335	A 182 Grade F12
1.7380	10CrMo9-10	1.7380	A 182 Grade F22
1.7709	21CrMoV5-7	1.7709	-

Dimensions of DIN flanges

DN = Nominal diameter
D = Diameter of flange
Lk = Diameter of bolt circle
n = Number of holes
d = Diameter of holes

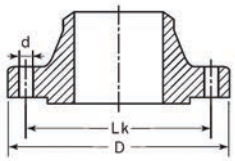

		PN 6				PN 10				PN 16				PN 25				PN 40			
DN		D	Lk	n	d	D	Lk	n	d	D	Lk	n	d	D	Lk	n	d	D	Lk	n	d
10	3/8“	75	50	4	11	90	60	4	14	90	60	4	14	90	60	4	14	90	60	4	14
15	1/2“	80	55	4	11	95	65	4	14	95	65	4	14	95	65	4	14	95	65	4	14
20	3/4“	90	65	4	11	105	75	4	14	105	75	4	14	105	75	4	14	105	75	4	14
25	1“	100	75	4	11	115	85	4	14	115	85	4	14	115	85	4	14	115	85	4	14
32	1-1/4“	120	90	4	14	140	100	4	18	140	100	4	18	140	100	4	18	140	100	4	18
40	1-1/2“	130	100	4	14	150	110	4	18	150	110	4	18	150	110	4	18	150	110	4	18
50	2“	140	110	4	14	165	125	4	18	165	125	4	18	165	125	4	18	165	125	4	18
65	2-1/2“	160	130	4	14	185	145	4	18	185	145	4	18	185	145	8	18	185	145	8	18
80	3“	190	150	4	18	200	160	8	18	200	160	8	18	200	160	8	18	200	160	8	18
100	4“	210	170	4	18	220	180	8	18	220	180	8	18	235	190	8	22	235	190	8	22
125	5“	240	200	8	18	250	210	8	18	250	210	8	18	270	220	8	26	270	220	8	26
150	6“	265	225	8	18	285	240	8	22	285	240	8	22	300	250	8	26	300	250	8	26
200	8“	320	280	8	18	340	295	8	22	340	295	8	22	360	310	12	26	375	320	12	30

		PN 63				PN 100				PN 160				PN 250				PN 320			
DN		D	Lk	n	d	D	Lk	n	d	D	Lk	n	d	D	Lk	n	d	D	Lk	n	d
10	3/8"	100	70	4	14	100	70	4	14	100	70	4	14	125	85	4	18	125	85	4	18
15	1/2“	105	75	4	14	105	75	4	14	105	75	4	14	130	90	4	18	130	90	4	18
20	3/4“	-	-	-	-	-	-	-	-	-	-	-	-	-	-	-	-	-	-	-	-
25	1“	140	100	4	18	140	100	4	18	140	100	4	18	150	105	4	22	160	115	4	22
32	1-1/4“	-	-	-	-	-	-	-	-	-	-	-	-	-	-	-	-	-	-	-	-
40	1-1/2“	170	125	4	22	170	125	4	22	170	125	4	22	185	125	4	26	195	145	4	26
50	2“	180	135	4	22	195	145	4	26	195	145	4	26	200	150	8	26	210	160	8	26
65	2-1/2“	205	160	4	22	220	170	8	26	220	170	8	26	230	180	8	26	255	200	8	30
80	3“	215	170	4	22	230	180	8	26	230	180	8	26	255	200	8	30	275	220	8	30
100	4“	250	200	4	22	265	210	8	30	265	210	8	30	300	235	8	30	300	265	8	36

Dimensions of ANSI flanges

DN = Nominal diameter
D = Diameter of flange
Lk = Diameter of bolt circle
n = Number of holes
d = Diameter of holes
B = Flange bore
A_h = Outside diameter butt weld

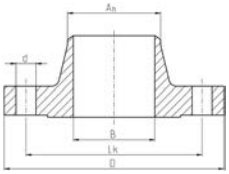

				Class 150				Class 300			
DN		**B**	**A_h**	**D**	**Lk**	**n**	**d**	**D**	**Lk**	**n**	**d**
15	1/2“	15.8	21.3	90	60.3	4	15.9	95	66.7	4	15.9
20	3/4“	20.9	26.7	100	69.9	4	15.9	115	82.6	4	19.0
25	1“	26.6	33.4	110	79.4	4	15.9	125	88.9	4	19.0
32	1-1/4“	35.1	42.2	115	88.9	4	15.9	135	98.4	4	19.0
40	1-1/2“	40.9	48.3	125	98.4	4	15.9	155	114.3	4	22.2
50	2“	52.5	60.3	150	120.7	4	19.1	165	127.0	8	19.0
65	2-1/2“	62.7	73.0	180	139.7	4	19.1	190	149.2	8	22.2
80	3“	77.9	88.9	190	152.4	4	19.1	210	168.3	8	22.2
100	4“	102.3	114.3	230	190.5	8	19.1	255	200.0	8	22.2
125	5“	128.2	141.3	255	215.9	8	22.2	280	235.0	8	22.2
150	6“	154.1	168.3	280	241.3	8	22.2	320	269.9	12	22.2
200	8“	202.7	219.1	345	298.5	8	22.2	380	330.2	12	25.4

Standard pipe dimensions, available pipe dimensions

x = Standard pipe dimensions
o = available on request
- = not available resp. project specified option

Stainless steel and copper pipes

DIN EN ISO 1127 - Stainless steel pipe dimensions

Wall thickn. in mm	outside pipe diameter in mm								
	10.0	12.0	17.2	21.3	26.9	33.7	42.4	48.3	60.3
1.0	x	x	-	-	-	-	-	-	-
1.6	-	-	-	o	-	-	-	-	-
2.0	-	o	-	o	-	o	x	o	o
2.3	-	-	x	-	-	-	-	-	-
2.6	-	-	-	x	-	o	-	o	-
2.9	-	-	-	-	x	-	-	-	-
3.2	-	-	-	o	-	x	o	-	-
3.6	-	-	-	-	-	-	-	x	x
4.5	-	-	-	-	-	o	-	-	-

ASTM A312 - Stainless steel pipe dimensions

Wall thickness	outside pipe diameter in mm							
	1/4“	3/8“	1/2“	3/4“	1“	1-1/4“	1-1/2“	2“
	13.72	17.15	21.34	26.67	33.40	42.16	48.26	60.33
Sch. 5	1.20	1.20	1.72	1.72	1.72	1.72	1.72	1.72
Sch. 10	1.72	1.72	2.11	2.11	2.77	2.77	2.77	2.77
Sch. 40	2.24	2.31	2.77	2.87	3.38	3.56	3.68	3.91

DIN EN 12449 - Copper pipe dimensions

Wall thickn. in mm	outside pipe diameter in mm								
	10.0	12.0	15.0	18.0	22.0	28.0	35.0	42.0	54.0
1.0	x	x	o	-	-	-	-	-	-
1.5	-	-	x	x	x	x	x	x	-
2.0	-	-	-	-	-	-	-	-	x

Standard pipe dimensions, available pipe dimensions

x = Standard pipe dimensions
o = available on request
- = not available resp. project specified option

Stainless steel body - welding connections

DIN EN ISO 1127 - Butt weld connection

Wall thickn. in mm	outside pipe diameter in mm										
	12.0	13.5	15.0	16.0	17.2	18.0	21.3	22.0	26.9	28.0	30.0
1.0	x	-	-	-	-	-	-	-	-	-	-
1.5	-	-	x	x	-	-	-	-	-	o	-
1.6	-	x	-	-	x	o	o	-	o	o	-
2.0	o	-	-	-	o	o	x	o	x	o	x
2.3	-	o	-	-	o	-	-	-	o	-	-
2.6	-	-	-	-	-	-	o	-	o	-	-
2.9	-	-	-	-	-	-	-	-	o	-	-
3.2	-	-	-	-	-	-	o	-	-	-	-
3.6	-	-	-	-	-	-	-	-	-	-	-
4.0	-	-	-	-	-	-	-	-	-	-	-
5.6	-	-	-	-	-	-	-	-	-	-	-
6.3	-	-	-	-	-	-	-	-	-	-	-
7.1	-	-	-	-	-	-	-	-	-	-	-

DIN EN ISO 1127 - Butt weld connection

Wall thickn. in mm	outside pipe diameter in mm										
	33.7	38.0	42.4	48.3	60.3	70.0	76.1	88.9	114.3	168.3	219,1
1.0	-	-	-	-	-	-	-	-	-	-	-
1.5	-	-	-	-	-	-	-	-	-	-	-
1.6	o	-	-	o	o	-	-	-	-	-	-
2.0	x	x	-	x	o	o	-	-	-	-	-
2.3	-	-	-	-	-	-	-	o	-	-	-
2.6	o	-	x	o	x	-	x	-	-	-	-
2.9	-	-	-	-	o	x	o	-	x	-	-
3.2	o	-	-	o	-	-	-	x	-	o	-
3.6	-	-	-	o	-	-	o	-	-	-	-
4.0	-	-	-	-	o	-	-	o	-	-	x
5.6	-	-	-	-	-	-	-	o	-	-	-
6.3	-	-	-	-	-	-	-	-	o	-	-
7.1	-	-	-	-	-	-	-	-	-	x	-

ASTM A312 - Butt weld connection

Wall thickn.	outside pipe diameter in mm												
	1/4“	3/8“	1/2“	3/4“	1“	1-1/4“	1-1/2“	2“	2-1/2“	3“	4“	6“	8“
	13.72	17.15	21.34	26.67	33.40	42.16	48.26	60.33	73.03	88.90	114.3	168.3	219.1
Sch. 5	1.20	1.20	1.72	1.72	1.72	1.72	1.72	1.72	2.11	2.11	2.11	2.77	2.77
Sch. 10	1.72	1.72	2.11	2.11	2.77	2.77	2.77	2.77	3.04	3.04	3.04	3.38	3.76
Sch. 40	2.24	2.31	2.77	2.87	3.38	3.56	3.68	3.91	5.16	5.49	6.02	7.11	8.18

Approvals and Classifications

Nowadays, product approvals are essential for many customer applications.
Below is an excerpt of our most important certifications. A detailed list can be found at herose.com.

Type approvals

Approval company	Approval	Mark
TÜV	CE LNG (DIN EN 12567) Fire Safe (DIN EN ISO 10497)	
National Board	ASME / UV	
AQSIQ	Manufacture License of Special Equipment	
VNIINMASH	EAC	
TSSA	CRN	
AAR		
TECKO	GOST-Ukraine	

Classification societies

Bureau Veritas

China Classification Society

Det Norske Veritas/ Germanischer Lloyd

Lloyd's Register

American Bureau of Shipping

Registro Italiano Navale

Russian Maritime Register of Shipping

Overview ASME Approvals
Safety Valves

HEROSE Type	Inlet	D_0	Certificate No.	Media
06002/ 06006/ 06012/ 06016	1/4“ up to 1/2“	6 mm	91213	Vapours and Gases
06002/ 06012 „gastight“	1/4“ up to 1/2“	6 mm	91246	Vapours and Gases
06381/ 06386/ 06416	1/2“ up to 3/4“	10,5 mm	91224	Vapours and Gases
06383/ 06388/ 06413/ 06418	1/2“ up to 3/4“	7 mm	91011	Vapours and Gases
06383/ 06388/ 06413/ 06418	1/2“ up to 3/4“	10,5 mm	91088	Vapours and Gases
06383/ 06388/ 06413/ 06418	1“	15 mm	91077	Vapours and Gases
06383/ 06388/ 06413/ 06418	1-1/4“ up to 1-1/2“	23 mm	91101	Vapours and Gases
06420/ 06421/ 06425/ 06426/ 06440/ 06441/ 06445/ 06446	1/2“ up to 3/4“	7 mm	91189	Vapours and Gases
06420/ 06421/ 06425/ 06426/ 06440/ 06441/ 06445/ 06446	1/2“ up to 3/4“	10,5 mm	91190	Vapours and Gases
06420/ 06421/ 06425/ 06426/ 06440/ 06441/ 06445/ 06446	3/4“ up to 1“	14 mm	91279	Vapours and Gases
06420/ 06421/ 06425/ 06426/ 06440/ 06441/ 06445/ 06446	1“ up to 1-1/4“	18 mm	91280	Vapours and Gases
06420/ 06421/ 06425/ 06426/ 06440/ 06441/ 06445/ 06446	1“-1/4“	23 mm	91202	Vapours and Gases

For your notes

General Terms and Conditions 08/2018

HEROSE

The following terms apply to all purchase agreements and contracts for work and materials concluded between us and our contractual counterparts that are businesses (hereinafter referred to as "Purchaser"), as well as to our offers, even if we do not expressly refer to them in an individual case. Derogations from this general rule are only binding upon us where we expressly confirm them in writing. The Purchaser's terms of purchase shall not be binding upon us, even where we do not expressly object to them.

1. Offer and contract formation
Our offer is subject to change with respect to the price, amount, delivery period and our ability to make delivery until the order is confirmed in writing. Side agreements are only effective if they have been confirmed by us in writing.

2. Scope of delivery
The scope of delivery is specified in the order confirmation with binding effect. With respect to goods that are customised we are allowed to make excess or short deliveries differing from the quantity ordered by up to 10 %.

3. Deliveries and delivery periods
The delivery period shall start on the date when all details of the order have been clarified, but not until the contractual duties to be fulfilled by the Purchaser by that time have been fulfilled. The delivery deadline shall be deemed complied with if the goods have left the warehouse when the deadline is reached or, where shipping is delayed due to reasons for which the Purchaser is responsible, if the notification that the goods are ready to ship is made within the delivery period agreed. Compliance with the delivery period is subject to the condition precedent that we receive correct and timely deliveries from our suppliers.
Timely and appropriately sized partial deliveries are permissible and may be billed separately. If force majeure events, industrial actions or other events that are beyond our control, regardless of whether they are experienced by us or our subsuppliers, keep us from complying with our duty to deliver the goods, the delivery shall be extended by the duration of the disruption. If it becomes impossible to deliver the goods because of such an event or if the subsequent delivery creates an undue burden for either of the parties, both parties are entitled to rescind the agreement. If performance is delayed or if it is no longer possible to deliver the goods ordered due to reasons for which we are responsible, the Purchaser is entitled to rescind the agreement in accordance with the statutory provisions. Claims for damages are subject to the provisions in Section 12 of these Terms of Sale. If the Purchaser is in default of acceptance, we are entitled to charge the Purchaser a fee for storing the goods for each week of default at a flat rate of 1% of the invoice value per week, with a total of 5 %.

4. Prices
Our prices are quoted ex warehouse, exclusive of the statutory value-added tax.. Packaging costs, loading costs, customs fees, etc. shall be borne by the Purchaser.

5. Shipping/ passing of the risk
Goods are dispatched and shipped at the expense and risk of the Purchaser. The risk shall pass to the Purchaser when the goods leave our premises. Where the dispatch is delayed due to the Purchaser's conduct, the risk shall pass, and the purchase price shall become due, when the Purchaser is notified that the goods are ready to ship.

6. Payment terms
Invoice amounts must be paid within 30 days of the date of invoice without any deduction. If we grant any discounts, they may not be deducted from any new invoices as long as older invoices for which payment is due have not been paid yet. For periods during which the Purchaser is in default of payment or during which payments due are deferred we will charge the default interest at the statutory rate without prejudice to any further claims for damages. Where it becomes apparent after the conclusion of the agreement that our claim for payment is at risk due to the customer's inability to perform and where we have fulfilled the obligations owed by us in return, all of our outstanding claims become due immediately. In this event we are entitled to only make outstanding deliveries against payment of cash or the provision of a security. This does not affect any further statutory claims. The Purchaser has the right to withhold payments, or to offset counterclaims against them, only in so far as the Purchaser's counterclaims are not in dispute or have become final and absolute. This does not apply to counterclaims of the Purchaser which directly seek rectification or to reverse a transaction – owing to a defect we have not corrected, or are unable to correct, by means of remedial performance – and which are based on the same contractual relationship as our claim to payment.

7. Retention of title
We will retain the title to the goods delivered until all outstanding payments due to us under the business relationship, including incidental costs and interest, are settled in full. This also applies until the checks for such payments have cleared. For current accounts, the goods subject to retention of title shall secure our claim to the outstanding balance. Goods subject to retention of title shall be processed and treated on our behalf without creating any obligations for us. If our goods are processed, combined or mixed with other goods that do not belong to us, we are entitled to a co-ownership interest in the new items based on the ratio of the invoice value of the goods subject to retention of title compared to the value of the other goods processed at the time when they are processed, combined or mixed. Where the Purchaser becomes the sole owner of the new item, it already now assigns the co-ownership interest in the new item to us based on the ratio of the invoice value of our goods subject to retention of title compared to the value of the other goods processed at the time when they are processed, combined or mixed and it shall hold the new item in custody for us with the due diligence of a prudent businessman.
The goods delivered, irrespective of whether they are unprocessed or have been processed or combined or mixed, may only be resold by resellers in the ordinary course of business subject to retention of title, and only if the receivables resulting from the resale pass to us. The Purchaser must not pledge or assign goods subject to retention of title as collateral or agree to a prohibition of assignment or an assignment without our consent in the context of factoring. Where execution is levied in respect of the goods subject to retention of title or where our rights are prejudiced by third parties in any other way, the Purchaser must notify us without undue delay. The Purchaser hereby assigns to us in advance all receivables to which it is entitled now or will be entitled later from the resale or on any other legal ground with respect to the goods delivered by us as of the time when they accrue. We accept the assignment. The value of the goods shall be deemed our invoice amount plus a surety surcharge of 10% which is not applied, though, where the rights of third parties conflict with it. If our goods are resold after they have been processed, combined or mixed or if the new item resulting from the processing, combination or mixing is resold, the claim against the Purchaser's customer in the amount of the invoice value of our processed, combined or mixed goods shall be assigned. This also applies if our goods are sold after they have become an essential component of another item by combining or processing them with other items not belonging to us. If the value of the

collateral provided to us exceeds our claims by more than 10 % in total, we have a duty to release collateral (to be selected at our discretion) at the Purchaser's request. Once all outstanding payments due to us under the business relationship have been settled, title to the goods subject to retention of title and the receivables assigned shall pass to the Purchaser. The Purchaser is authorised to collect the purchase price on our behalf until we revoke this authorisation. The Purchaser has a duty to notify its customers of the assignment at our request and to provide the information and documents that are required for exercising our rights vis-à-vis the respective purchaser.

8. Liability for defects

The Purchaser's warranty rights are predicated on the assumption that the Purchaser, where the Purchaser is a businessman ("Kaufmann"), has duly satisfied its obligations to inspect the goods and to give notice of defects pursuant to Section 377 of the German Commercial Code (HGB).
The Purchaser is not entitled to base complaints on excess or short weight due to foundry technology reasons. If there is a defect, we can remedy the defect or provide a replacement, at our option. If the Purchaser asserts claims for defects, it must give us the opportunity and the time required to review the complaint. If the item is defective and if the Purchaser has incorporated said item into another item or attached it to another item in accordance with its nature and type of use, then we – should a claim for subsequent performance be asserted against us – are entitled to choose within a reasonable period of time whether to compensate the Purchaser for the work required to remove the defective product and to install or attach the rectified product or the defect-free replacement product (work), or to carry out this work ourselves or have this work carried out at our expense (self-performance). If we fail to exercise this right within a reasonable period of time, it shall be deemed forfeited. If we opt for self-performance, the Purchaser shall be entitled to specify a reasonable period of time for such performance. Where said time period expires without results, the Purchaser is entitled to carry out the work itself or have it carried out. In this case, our right to self-performance shall be deemed forfeited and the Purchaser may carry out this work at our expense. Our right to object to the kind of subsequent performance due to its disproportionate expense pursuant to Section 439 (4) of the German Civil Code (BGB) remains unaffected. Where this does not apply, we must reimburse the Purchaser for the required costs incurred for the work. Claims for defects pursuant to Section 437 BGB shall become time barred twelve (12) months after the date of delivery. This limitation does not apply to claims for damages, including claims for damages based on the fact that we are in default of performance with respect to the rectification of a defect requested by the Purchaser and owed by us, or with respect to an item that was used for a building in accordance with its customary use. We do not provide any warranty for used products. The provisions in the two foregoing sentences shall not affect the limitation period for recovering from the supplier pursuant to Sections 445b, 478 BGB. Claims for damages based on an injury to the life, body or health of a person caused by defects or claims for damages under the German Product Liability Act (Produkthaftungsgesetz) shall not be limited either by the foregoing provisions. Further claims that are not limited by this provision are other claims for damages under warranty law in the event of gross negligence, intent, or the breach of material contractual duties. Section 12 of these Terms of Sale shall apply in this respect.

9. Returns

Returns that are not based on a statutory claim may only be made free of carriage charges with our express consent. We reserve the right to deduct an amount of at least 30 % of the net value of the goods when we credit the purchase price to compensate for the costs incurred with every return. The Purchaser is free to prove to us that the loss incurred by us due to the return is smaller.

10. Catalogues

The images in our catalogues and brochures are not binding for the actual execution. We reserve the right to change the construction style where this is advisable for technical reasons and does not impair the contractual purpose. Derogations from the measures and weights specified are permissible where they do not jeopardise the contractual purpose or the quality.

11. Copyright

We reserve the proprietary rights and copyrights with respect to catalogues, images, drawings, samples, and other documents. They must not be made available to third parties without our consent and must be returned without undue delay upon request. If an order placed with us infringes upon third party patent, design or trademark rights due to drawings or models submitted to us, all responsibility shall lie with the Purchaser which shall be liable for any resulting damage and loss of profits incurred by us, as the supplier, and shall indemnify us against any claims brought against us by third parties unless it is not responsible for the infringement.

12. General liability

We are only liable for damage that is caused intentionally or through gross negligence. With respect to breaches of material contractual duties we are also liable if they are caused by ordinary negligence. "Material contractual duties" are duties whose fulfilment is essential to the proper performance of the contract and upon whose fulfilment the Purchaser regularly relies and may regularly rely. Our liability is limited to the reasonably foreseeable damage typically incurred with this type of contract unless it is due to an intentional act. The foregoing limitations of liability do not apply to injuries to the life, body or health of a person or in cases of liability pursuant to the German Product Liability Act. The Purchaser's claims for the reimbursement of expenses pursuant to Section 284 BGB are waived to the extent that a claim for damages in lieu of performance is excluded pursuant to the foregoing provisions. The foregoing limitations on liability shall also apply to our employees, management bodies and other vicarious agents.

13. Place of performance, venue, applicable law, miscellaneous

The place of performance for all claims arising under this agreement is our registered office. The legal venue for all disputes with businessmen, legal entities under public law, special funds under public law or persons who do not have a place of general jurisdiction in Germany is the city in which our registered office is located. We are entitled to also, at our option, bring a suit against the Purchaser in the court having jurisdiction over the area in which its registered office is located. If the registered office of the Buyer is located outside of the European Economic Area (EEA) and the European Free Trade Area (EFTA), the two foregoing sentences do not apply. In this event, all disputes arising in connection with the agreement or its validity shall be finally settled in accordance with the rules of arbitration of Deutsche Institution für Schiedsgerichtsbarkeit e.V. (DIS) without recourse to the ordinary courts. The place of arbitration is Hamburg; the language of the proceedings is German. German law applies to the exclusion of the UN Convention on Contracts for the International Sale of Goods (CISG). We store the data generated in the context of the business relationship in accordance with the legal regulations.

HEROSE GMBH
ARMATUREN UND METALLE

Elly-Heuss-Knapp-Strasse 12
23843 Bad Oldesloe
Germany

Phone: +49 4531/509-0
Fax: +49 4531/509-120
info@herose.com

All rights reserved, subject to errata and printing errors